KEAZ

ESTABLISHED IN 1945

ELECTRICAL PRODUCTS CATALOG 2023












produced in Russia

ABOUT KEAZ

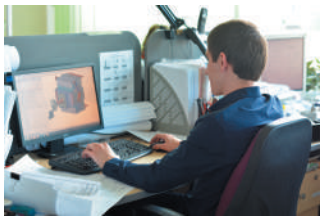

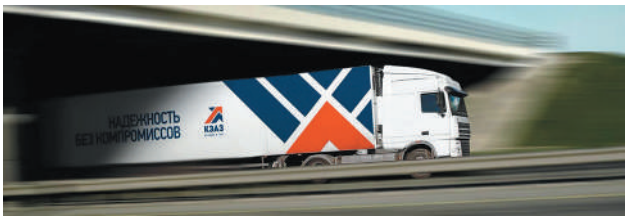

You are holding the product catalog of KEAZ - Kursk Electrical Equipment Plant - the leading Russian developer and manufacturer of reliable electrical engineering. The plant is located in Kursk and has produced low-voltage and high-voltage equipment since 1945.

RELIABILITY WITHOUT COMPROMISE is the main quality of KEAZ products. That is what customers and partners of the company appreciate: our devices protect the power systems of DM objects, industrial giants, ships, thermal power plants, nuclear power plants, IDGCs, ships and submarines of the Russian Navy, Russian Railways rolling stock and the subway.

The production employs 2,000 employees. High quality professionals develop KEAZ devices: designers of the company, owners of many patents for inventions, are annually recognized as the best engineers in Russia.

Our representatives work in 43 regions of the country. More than 300 dealers sell KEAZ products in all cities of the Russian Federation and the CIS.

We are constantly developing, improving our products and services in order to become a reliable pillar of Russia's energy security and a guarantee of its stability.

Today, the products of the plant are represented by two trademarks under which the devices are manufactured, which strictly correspond to the declared characteristics and are intended for different price segments of the market:

KEAZ ESTABLISHED IN 1945 — Proven reliable solutions

KEAZ Optima — New plant developments with improved specifications

This catalog presents the products of KEAZ™.

Legend

IP54	Degree of device protection, IP.
16 A	Rated current of the device, A.
600 V 1000 V; 1000 V AC; 1000 V DC; 1000 V AC/DC	Rated voltage of the device. The operating voltage range of the device. The lower voltage threshold is 180 V, the upper - 255 V.
20kV	Dielectric strength.
Zn; Cu; Brass	Material of metal parts.
-40°C +50°C	The range of operating temperatures of the device.
EAC	Availability of a certificate of conformity of the technical regulations of the Customs Union.
±90°	Ability to install with a deviation from the vertical.
warranty 3 years	Manufacturer's warranty period.
NPP	Products for nuclear power plants.
RIVER REGISTER; MARITIME REGISTER	Maritime Register, River Register.
	Availability of fire safety certificate.
8 STANDARD SIZES	Availability of 8 standard sizes in dimensions in the product range.
RZD	Certificate / accreditation of Russian Railways, compliance with TR CU 001/2011.
10kA MSC	Maximum switching capacity (ПКС), kA.
	Microprocessor control, high-precision electronic components.
3 of INDICATOR	The device has 3 (4) indicators that indicate emergency conditions.
3 of CONTROLLER	The device has 3 (4) controllers on the front panel.
NONFLAMMABLE; SELF-EXTINGUISHING	Nonflammable material. Self-extinguishing material.
	Ability to connect / supply cables / power bus as from the top and from the bottom.

CONTENTS

1
(pp. 4-29)

2
(pp. 30-88)

3
(pp. 89-138)

4
(pp. 139-192)

1 DEVICES FOR DIN RAILS

KEAZ company offers the market an optimal line of low-cost din-rail devices for the implementation of cost-effective solutions for protection of electrical networks in residential and public buildings. The range includes several types of circuit breakers, residual current devices and load switches. These are modern products designed to meet the need for reliable and affordable equipment in the economy segment.

Benefits of the series

- Affordable solution from KEAZ to build standard power supply schemes.
-
- Production, calibration and testing under the control and technologies of KEAZ ensures full compliance with the requirements of quality standards, which means:
  - confidence in the systems security;
  - confidence in the absence of false positives;
  - confidence in the absence of additional costs for reassembly in case of malfunctions.
- Easy-to-read marking on the front surface of a product allows you to quickly select the desired design during installation work and provides error-free identification of all parameters during electrical installation maintenance.
- Micro-corrugated packaging guarantees delivery of equipment without damage to the final consumer.
- Bright and colorful packaging is suitable for displaying the product on the trading floor without the additional cost of window dressing.
- Products are ideally adapted for all types of warehouses:
  - a large and easy-to-read label makes it easier for the warehouse staff to navigate through the products;
  - for the automated processing by WMS systems, the products have unique product codes and bar codes provided.
- The range includes devices with a switching capacity of 6 and 10 kA, which makes it possible to install them as input devices in accordance with GOST R 51732-2001.

Modular circuit breakers VA47

Comply with the requirements of GOST R 50345-2010

UP TO 100 A

-60°C +40°C

±90°

SELF-EXTINGUISHING

Circuit breakers of VA47 series are designed for use in electrical networks with AC voltage up to 400 V, 50 Hz, for their protection in case of overloads and short circuits, conduction of current in normal mode and operational switching on and off of electrical networks and electrical equipment.

Design features

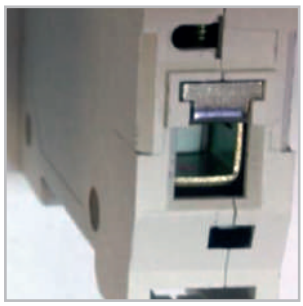

Notches on the terminal clamps provide the most tight contact, increase the mechanical strength of the connection and reduce the value of the transient resistance, thereby ensuring that the connected conductors do not overheat and melt.

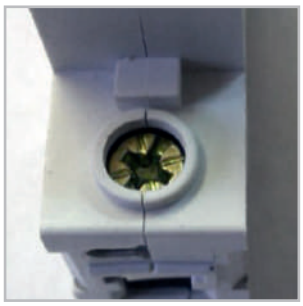

The possibility to provide the necessary tightening force of screws on terminal clips with a screwdriver of any shape due to the screw head with a combined slot.

Comprehensive protection of electrical equipment and electrical networks against two types of abnormal and emergency modes - overload and short circuits.

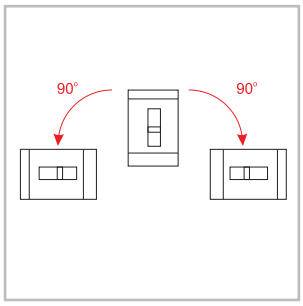

Ample opportunities on the layout of boards by mounting devices both vertically and turning right / left to 90°.

Possibility to control the position of the main contacts regardless of the position of the control handle thanks to a special indicator on the front surface of the circuit breaker.

Possibility of operation in harsh Russian conditions at ambient temperatures from -60 to + 40°C.

Designation structure

VA47-X_1-$X_2X_3X_4XX_5$-UHL3

VA47	- Designation of the series of breakers
X_1	- Switch type
X_2	- Number of poles
X_3	- Letter "N" in the presence of a pole without a releaser*
X_4	- Type of protective characteristic
XX_5	- Rated current of the maximum releaser
UHL3	- Designation of the climatic category and category of placement

Example of writing a single-pole circuit breaker designation with a type-C protective characteristic for a rated current of 16 A:
Circuit breaker VA47-29-1C16-UHL3

Example of writing a four-pole circuit breaker designation with a type-C protective characteristic with unprotected pole for rated current of 100 A:
Circuit breaker VA47-100-4NC100-UHL3

* For VA47-100 series

Specifications

Parameter name	Parameter value	
Series		
	VA47-29	VA47-100
Compliance with the requirements of the standard	GOST R 50345-2010	
Number of poles	1P; 2P; 3P; 4P	
Type of protective characteristic of the electromagnetic releaser	B, C, D	C, D
Rated current, I_n, A	1, 2, 3, 4, 5, 6, 8, 10, 16, 20, 25, 32, 40, 50, 63	16, 20, 25, 32, 40, 50, 63, 80, 100
Rated operating voltage, U_e, V	230/400	
Rated maximum switching capacity, I_{cn}, A	4500	10000
Wear resistance, CO cycles (switching on-off), not less:		
-total	10000	20000
- switching (under load)	4000	
Break switch protection degree	IP20	
Section of connected conductors, mm²	1,5 - 25	2,5 - 35
Climatic category	UHL3 acc. to GOST 15150	
Mass of a single-pole switch, not more, kg	0,125	0,15
Operating temperature range, ° C	-60 to +40	

Item numbers of VA47-29

Appearance	Designation	Quantity of poles	Rated current, A	Type of protective characteristics	Item number
	VA47-29-1C1-UHL3	1	1	C	253171
	VA47-29-1C2-UHL3	1	2	C	253170
	VA47-29-1C3-UHL3	1	3	C	253169
	VA47-29-1C4-UHL3	1	4	C	253168
	VA47-29-1C5-UHL3	1	5	C	253167
	VA47-29-1C6-UHL3	1	6	C	141485
	VA47-29-1C8-UHL3	1	8	C	231627
	VA47-29-1C10-UHL3	1	10	C	141487
	VA47-29-1C16-UHL3	1	16	C	141493
	VA47-29-1C20-UHL3	1	20	C	141554
	VA47-29-1C25-UHL3	1	25	C	141555
	VA47-29-1C32-UHL3	1	32	C	141556
	VA47-29-1C40-UHL3	1	40	C	141585
	VA47-29-1C50-UHL3	1	50	C	141589
	VA47-29-1C63-UHL3	1	63	C	141590
	VA47-29-1B1-UHL3	1	1	B	253046
	VA47-29-1B2-UHL3	1	2	B	253045
	VA47-29-1B3-UHL3	1	3	B	253044
	VA47-29-1B4-UHL3	1	4	B	253043
	VA47-29-1B5-UHL3	1	5	B	253042
	VA47-29-1B6-UHL3	1	6	B	253040
	VA47-29-1B8-UHL3	1	8	B	253041
	VA47-29-1B10-UHL3	1	10	B	253032
	VA47-29-1B16-UHL3	1	16	B	253033
	VA47-29-1B20-UHL3	1	20	B	253034
	VA47-29-1B25-UHL3	1	25	B	253035
	VA47-29-1B32-UHL3	1	32	B	253036
	VA47-29-1B40-UHL3	1	40	B	253037
	VA47-29-1B50-UHL3	1	50	B	253038
	VA47-29-1B63-UHL3	1	63	B	253039
	VA47-29-1D1-UHL3	1	1	D	253111
	VA47-29-1D2-UHL3	1	2	D	253110
	VA47-29-1D3-UHL3	1	3	D	253109
	VA47-29-1D4-UHL3	1	4	D	253108
	VA47-29-1D5-UHL3	1	5	D	253107
	VA47-29-1D6-UHL3	1	6	D	253105
	VA47-29-1D8-UHL3	1	8	D	253106
	VA47-29-1D10-UHL3	1	10	D	253097
	VA47-29-1D16-UHL3	1	16	D	253098
	VA47-29-1D20-UHL3	1	20	D	253099
	VA47-29-1D25-UHL3	1	25	D	253100
	VA47-29-1D32-UHL3	1	32	D	253101
	VA47-29-1D40-UHL3	1	40	D	253102
	VA47-29-1D50-UHL3	1	50	D	253103
	VA47-29-1D63-UHL3	1	63	D	253104
	VA47-29-2C1-UHL3	2	1	C	253166
	VA47-29-2C2-UHL3	2	2	C	253165
	VA47-29-2C3-UHL3	2	3	C	253164
	VA47-29-2C4-UHL3	2	4	C	253163
	VA47-29-2C5-UHL3	2	5	C	253162
	VA47-29-2C6-UHL3	2	6	C	231628
	VA47-29-2C8-UHL3	2	8	C	231629
	VA47-29-2C10-UHL3	2	10	C	141592
	VA47-29-2C16-UHL3	2	16	C	141594
	VA47-29-2C20-UHL3	2	20	C	141596
	VA47-29-2C25-UHL3	2	25	C	141597
	VA47-29-2C32-UHL3	2	32	C	141599
	VA47-29-2C40-UHL3	2	40	C	141600
	VA47-29-2C50-UHL3	2	50	C	141602
	VA47-29-2C63-UHL3	2	63	C	141604
	VA47-29-2B1-UHL3	2	1	B	253061
	VA47-29-2B2-UHL3	2	2	B	253060
	VA47-29-2B3-UHL3	2	3	B	253059
	VA47-29-2B4-UHL3	2	4	B	253058
	VA47-29-2B5-UHL3	2	5	B	253057

Appearance	Designation	Quantity of poles	Type current, A	Type of protective characteristics	Item number
	VA47-29-2B6-UHL3	2	6	B	253055
	VA47-29-2B8-UHL3	2	8	B	253056
	VA47-29-2B10-UHL3	2	10	B	253047
	VA47-29-2B16-UHL3	2	16	B	253048
	VA47-29-2B20-UHL3	2	20	B	253049
	VA47-29-2B25-UHL3	2	25	B	253050
	VA47-29-2B32-UHL3	2	32	B	253051
	VA47-29-2B40-UHL3	2	40	B	253052
	VA47-29-2B50-UHL3	2	50	B	253053
	VA47-29-2B63-UHL3	2	63	B	253054
	VA47-29-2D1-UHL3	2	1	D	253126
	VA47-29-2D2-UHL3	2	2	D	253125
	VA47-29-2D3-UHL3	2	3	D	253124
	VA47-29-2D4-UHL3	2	4	D	253123
	VA47-29-2D5-UHL3	2	5	D	253122
	VA47-29-2D6-UHL3	2	6	D	253120
	VA47-29-2D8-UHL3	2	8	D	253121
	VA47-29-2D10-UHL3	2	10	D	253112
	VA47-29-2D16-UHL3	2	16	D	253113
	VA47-29-2D20-UHL3	2	20	D	253114
	VA47-29-2D25-UHL3	2	25	D	253115
	VA47-29-2D32-UHL3	2	32	D	253116
	VA47-29-2D40-UHL3	2	40	D	253117
	VA47-29-2D50-UHL3	2	50	D	253118
	VA47-29-2D63-UHL3	2	63	D	253119
	VA47-29-3C1-UHL3	3	1	C	253161
	VA47-29-3C2-UHL3	3	2	C	253160
	VA47-29-3C3-UHL3	3	3	C	253159
	VA47-29-3C4-UHL3	3	4	C	253158
	VA47-29-3C5-UHL3	3	5	C	253157
	VA47-29-3C6-UHL3	3	6	C	231630
	VA47-29-3C8-UHL3	3	8	C	231631
	VA47-29-3C10-UHL3	3	10	C	141610
	VA47-29-3C16-UHL3	3	16	C	141613
	VA47-29-3C20-UHL3	3	20	C	231632
	VA47-29-3C25-UHL3	3	25	C	141615
	VA47-29-3C32-UHL3	3	32	C	141616
	VA47-29-3C40-UHL3	3	40	C	141618
	VA47-29-3C50-UHL3	3	50	C	141619
	VA47-29-3C63-UHL3	3	63	C	141621
	VA47-29-3B1-UHL3	3	1	B	253076
	VA47-29-3B2-UHL3	3	2	B	253075
	VA47-29-3B3-UHL3	3	3	B	253074
	VA47-29-3B4-UHL3	3	4	B	253073
	VA47-29-3B5-UHL3	3	5	B	253072
	VA47-29-3B6-UHL3	3	6	B	253070
	VA47-29-3B8-UHL3	3	8	B	253071
	VA47-29-3B10-UHL3	3	10	B	253062
	VA47-29-3B16-UHL3	3	16	B	253063
	VA47-29-3B20-UHL3	3	20	B	253064
	VA47-29-3B25-UHL3	3	25	B	253065
	VA47-29-3B32-UHL3	3	32	B	253066
	VA47-29-3B40-UHL3	3	40	B	253067
	VA47-29-3B50-UHL3	3	50	B	253068
	VA47-29-3B63-UHL3	3	63	B	253069
	VA47-29-3D1-UHL3	3	1	D	253141
	VA47-29-3D2-UHL3	3	2	D	253140
	VA47-29-3D3-UHL3	3	3	D	253139
	VA47-29-3D4-UHL3	3	4	D	253138
	VA47-29-3D5-UHL3	3	5	D	253137
	VA47-29-3D6-UHL3	3	6	D	253135
	VA47-29-3D8-UHL3	3	8	D	253136
	VA47-29-3D10-UHL3	3	10	D	253127
	VA47-29-3D16-UHL3	3	16	D	253128
	VA47-29-3D20-UHL3	3	20	D	253129
	VA47-29-3D25-UHL3	3	25	D	253130
	VA47-29-3D32-UHL3	3	32	D	253131
	VA47-29-3D40-UHL3	3	40	D	253132
	VA47-29-3D50-UHL3	3	50	D	253133
	VA47-29-3D63-UHL3	3	63	D	253134

Appearance	Designation	Quantity of poles	Rated current, A	Type of protective characteristics	Item number
	VA47-29-4C1-UHL3	4	1	C	253096
	VA47-29-4C2-UHL3	4	2	C	253095
	VA47-29-4C3-UHL3	4	3	C	253094
	VA47-29-4C4-UHL3	4	4	C	253093
	VA47-29-4C5-UHL3	4	5	C	253092
	VA47-29-4C6-UHL3	4	6	C	231633
	VA47-29-4C8-UHL3	4	8	C	231634
	VA47-29-4C10-UHL3	4	10	C	231635
	VA47-29-4C16-UHL3	4	16	C	231636
	VA47-29-4C20-UHL3	4	20	C	231637
	VA47-29-4C25-UHL3	4	25	C	141623
	VA47-29-4C32-UHL3	4	32	C	141625
	VA47-29-4C40-UHL3	4	40	C	141626
	VA47-29-4C50-UHL3	4	50	C	231638
	VA47-29-4C63-UHL3	4	63	C	141628
	VA47-29-4B1-UHL3	4	1	B	253091
	VA47-29-4B2-UHL3	4	2	B	253090
	VA47-29-4B3-UHL3	4	3	B	253089
	VA47-29-4B4-UHL3	4	4	B	253088
	VA47-29-4B5-UHL3	4	5	B	253087
	VA47-29-4B6-UHL3	4	6	B	253085
	VA47-29-4B8-UHL3	4	8	B	253086
	VA47-29-4B10-UHL3	4	10	B	253077
	VA47-29-4B16-UHL3	4	16	B	253078
	VA47-29-4B20-UHL3	4	20	B	253079
	VA47-29-4B25-UHL3	4	25	B	253080
	VA47-29-4B32-UHL3	4	32	B	253081
	VA47-29-4B40-UHL3	4	40	B	253082
	VA47-29-4B50-UHL3	4	50	B	253083
	VA47-29-4B63-UHL3	4	63	B	253084
	VA47-29-4D1-UHL3	4	1	D	253156
	VA47-29-4D2-UHL3	4	2	D	253155
	VA47-29-4D3-UHL3	4	3	D	253154
	VA47-29-4D4-UHL3	4	4	D	253153
	VA47-29-4D5-UHL3	4	5	D	253152
	VA47-29-4D6-UHL3	4	6	D	253150
	VA47-29-4D8-UHL3	4	8	D	253151
	VA47-29-4D10-UHL3	4	10	D	253142
	VA47-29-4D16-UHL3	4	16	D	253143
	VA47-29-4D20-UHL3	4	20	D	253144
	VA47-29-4D25-UHL3	4	25	D	253145
	VA47-29-4D32-UHL3	4	32	D	253146
	VA47-29-4D40-UHL3	4	40	D	253147
	VA47-29-4D50-UHL3	4	50	D	253148
	VA47-29-4D63-UHL3	4	63	D	253149

Item numbers of VA47-100

	Designation	Quantity of poles code	Rated current, A	Type of protective characteristics	Item number
	VA47-100-1C16-UHL3	1	16	C	233014
	VA47-100-1C20-UHL3	1	20	C	233015
	VA47-100-1C25-UHL3	1	25	C	233016
	VA47-100-1C32-UHL3	1	32	C	233017
	VA47-100-1C40-UHL3	1	40	C	233018
	VA47-100-1C50-UHL3	1	50	C	233019
	VA47-100-1C63-UHL3	1	63	C	233020
	VA47-100-1C80-UHL3	1	80	C	141620
	VA47-100-1C100-UHL3	1	100	C	141622
	VA47-100-1D16-UHL3	1	16	D	233042
	VA47-100-1D20-UHL3	1	20	D	233043
	VA47-100-1D25-UHL3	1	25	D	233044
	VA47-100-1D32-UHL3	1	32	D	233045
	VA47-100-1D40-UHL3	1	40	D	233046
	VA47-100-1D50-UHL3	1	50	D	233047
	VA47-100-1D63-UHL3	1	63	D	233048
	VA47-100-1D80-UHL3	1	80	D	141624
	VA47-100-1D100-UHL3	1	100	D	141627
	VA47-100-2C16-UHL3	2	16	C	233021
	VA47-100-2C20-UHL3	2	20	C	233022
	VA47-100-2C25-UHL3	2	25	C	233023
	VA47-100-2C32-UHL3	2	32	C	233024
	VA47-100-2C40-UHL3	2	40	C	233025
	VA47-100-2C50-UHL3	2	50	C	233026
	VA47-100-2C63-UHL3	2	63	C	233027
	VA47-100-2C80-UHL3	2	80	C	218963
	VA47-100-2C100-UHL3	2	100	C	218966
	VA47-100-2D16-UHL3	2	16	D	233049
	VA47-100-2D20-UHL3	2	20	D	233050
	VA47-100-2D25-UHL3	2	25	D	233051
	VA47-100-2D32-UHL3	2	32	D	233052
	VA47-100-2D40-UHL3	2	40	D	233053
	VA47-100-2D50-UHL3	2	50	D	233054
	VA47-100-2D63-UHL3	2	63	D	233055
	VA47-100-2D80-UHL3	2	80	D	219101
	VA47-100-2D100-UHL3	2	100	D	218967
	VA47-100-3C16-UHL3	3	16	C	233028
	VA47-100-3C20-UHL3	3	20	C	233029
	VA47-100-3C25-UHL3	3	25	C	233030
	VA47-100-3C32-UHL3	3	32	C	233031
	VA47-100-3C40-UHL3	3	40	C	233032
	VA47-100-3C50-UHL3	3	50	C	233033
	VA47-100-3C63-UHL3	3	63	C	233034
	VA47-100-3C80-UHL3	3	80	C	141629
	VA47-100-3C100-UHL3	3	100	C	141630
	VA47-100-3D16-UHL3	3	16	D	233056
	VA47-100-3D20-UHL3	3	20	D	233057
	VA47-100-3D25-UHL3	3	25	D	233058
	VA47-100-3D32-UHL3	3	32	D	233059
	VA47-100-3D40-UHL3	3	40	D	233060
	VA47-100-3D50-UHL3	3	50	D	233061
	VA47-100-3D63-UHL3	3	63	D	233062
	VA47-100-3D80-UHL3	3	80	D	141631
	VA47-100-3D100-UHL3	3	100	D	141632
	VA47-100-4C16-UHL3	4	16	C	233035
	VA47-100-4C20-UHL3	4	20	C	233036
	VA47-100-4C25-UHL3	4	25	C	233037
	VA47-100-4C32-UHL3	4	32	C	233038
	VA47-100-4C40-UHL3	4	40	C	233039
	VA47-100-4C50-UHL3	4	50	C	233040
	VA47-100-4C63-UHL3	4	63	C	233041
	VA47-100-4C80-UHL3	4	80	C	141633
	VA47-100-4C100-UHL3	4	100	C	141634
	VA47-100-4D16-UHL3	4	16	D	233063
	VA47-100-4D20-UHL3	4	20	D	233064
	VA47-100-4D25-UHL3	4	25	D	233065
	VA47-100-4D32-UHL3	4	32	D	233066
	VA47-100-4D40-UHL3	4	40	D	233067
	VA47-100-4D50-UHL3	4	50	D	233068
	VA47-100-4D63-UHL3	4	63	D	233069
	VA47-100-4D80-UHL3	4	80	D	218969
	VA47-100-4D100-UHL3	4	100	D	218968

Overall, installation and mounting dimensions

VA47-29

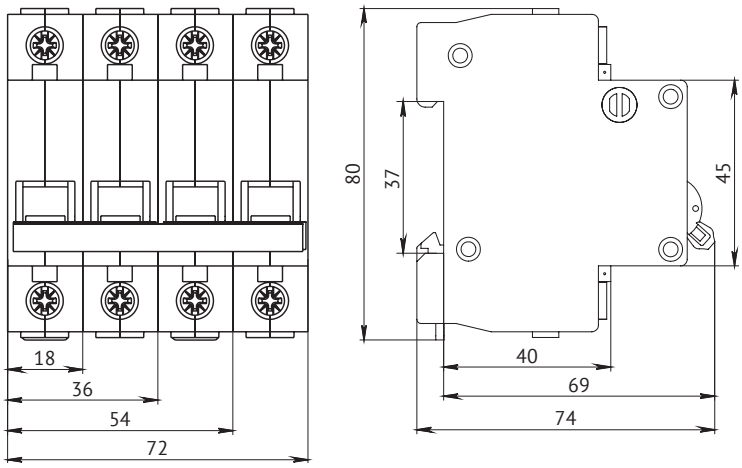

VA47-100

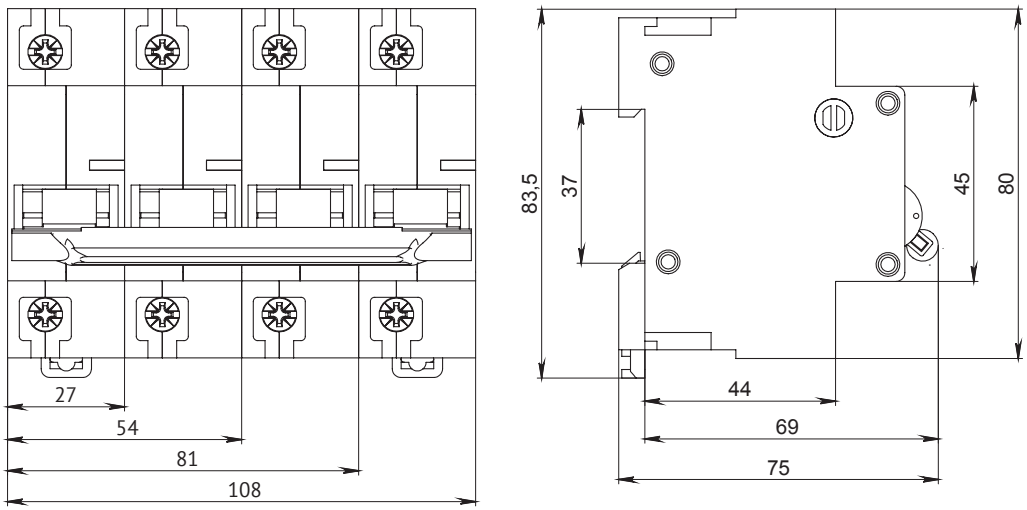

Circuit schematics

VA47-29

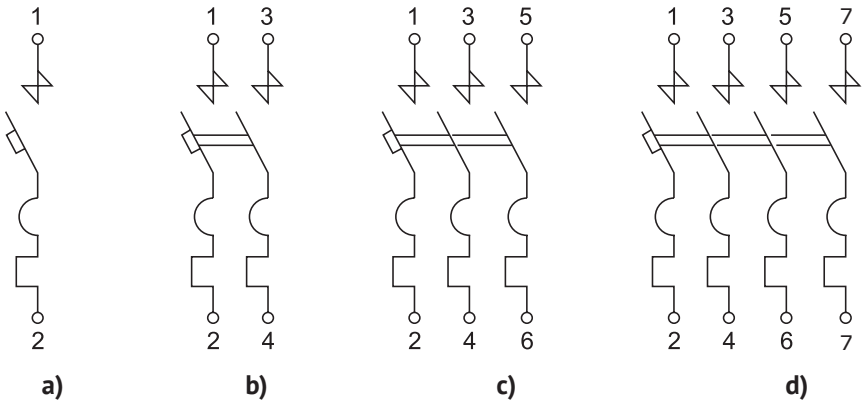

a) single pole; b) two-pole; c) three-pole; d) four-pole.

VA47-100

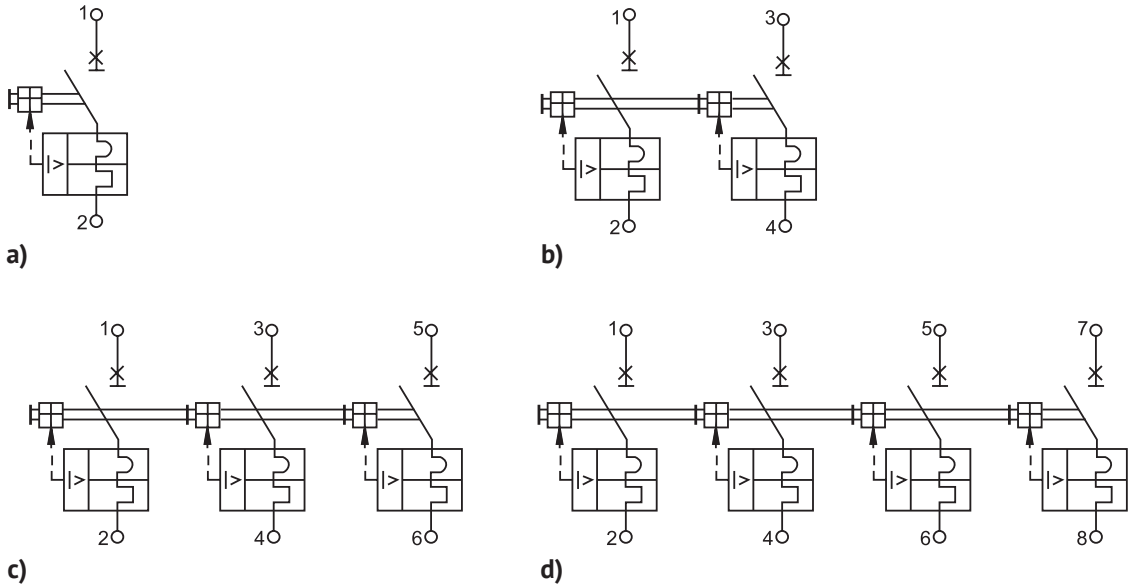

a) single pole; b) two-pole; c) three-pole; d) four-pole.

Time-current characteristics

At ambient temperature +30°C

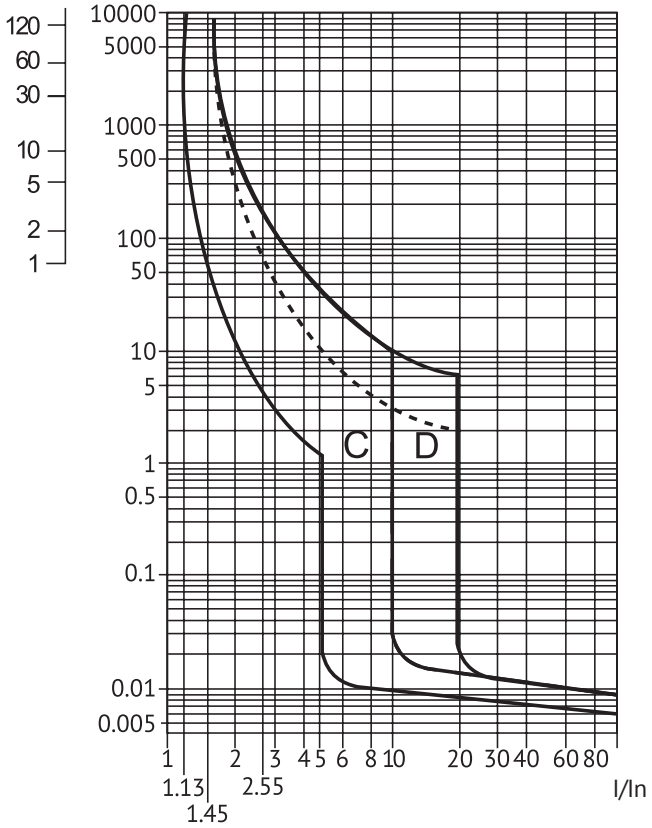

**In the figure, the dotted line is the upper limit of the time-current characteristic for circuit breakers with a rated current In ≤ 32 A*

Modular load-break switches VN-32

Comply with the requirements of GOST R 50030.3-2012

UP TO 100 A | -60°C +40°C | ± 90° | SELF-EXTINGUISHING | EAC

Modular load-break switches of VN-32 series are designed for the use in electric circuits with voltage up to 400 V AC, 50 Hz, conducting current in normal mode and operational switching on and off of the specified circuits.

Design features

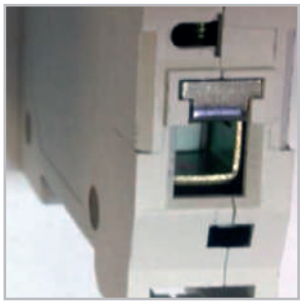

Notches on the terminal clamps provide the most tight contact, increase the mechanical strength of the connection and reduce the value of the transient resistance, thereby ensuring that the connected conductors do not overheat and melt.

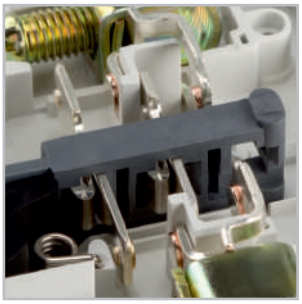

The special design of the bridge-type contact system ensures the most reliable contact in the on state and double break of the chain in the off state.

Increased mechanical strength of the body due to the increased wall thickness and the presence of additional rivets in the area of attachment of conductors.

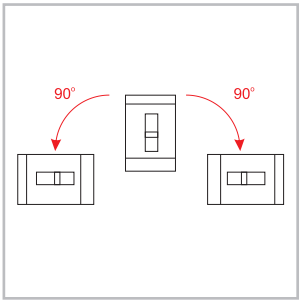

Ample opportunities on the layout of boards by mounting devices both vertically and turning right / left to 90°.

Designation structure

VN32-X_1X_2-UHL3

BH-32	- Switch type
X_1	- Number of poles
X_2	- Rated current
UHL3	- Climatic category

Example of writing the designation of a four-pole switch of VN-32 type with rated current of 100 A: Modular load-break switch VN-32-4100-UHL3.

Example of writing the designation of a two-pole switch of VN-32 type with rated current of 63 A: Modular load-break switch VN-32-263-UHL3.

Specifications

Parameter name	Parameter value
Series	 VN32
Compliance with the requirements of the standard	GOST R 50030.3-99
Number of poles	1P; 2P; 3P; 4P
Rated voltage, U_e, V, in the AC frequency circuit of 50 Hz	230/400
Minimum operating voltage, V	24
Rated currents, I_n, A	32*; 63; 100
Rated frequency, Hz	50
Wear resistance, CO cycles (switching on-off), not less:	
- total	10000
- switching	1500
Climatic category	UHL3 acc. to GOST 15150
Break switch protection degree	IP20
Section of connected conductors, mm^2	2.5 - 35
Mass of a single-pole switch, not more, kg	0.15
Category of use	AC22A

** for single pole switch only*

Item numbers

	Name	Number of poles	Rated current, A	Item number
	VN-32-132-UHL3	1	32	141635
	VN-32-163-UHL3	1	63	141636
	VN-32-1100-UHL3	1	100	141637
	VN-32-263-UHL3	2	63	141638
	VN-32-2100-UHL3	2	100	141639
	VN-32-363-UHL3	3	63	141640
	VN-32-3100-UHL3	3	100	141641
	VN-32-463-UHL3	4	63	141642
	VN-32-4100-UHL3	4	100	141643

Overall, installation and mounting dimensions

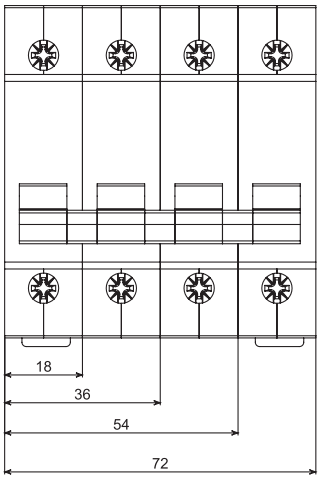

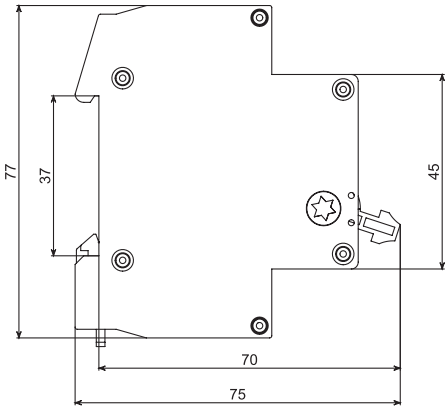

Circuit schematics

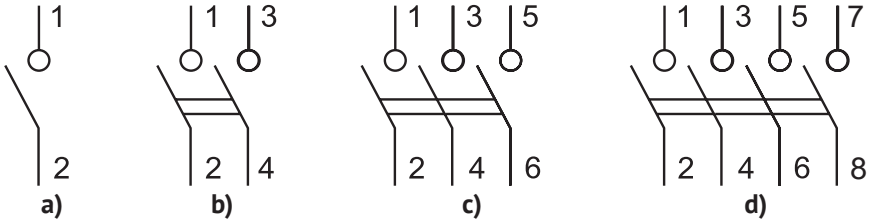

a) single pole; b) two-pole; c) three-pole; d) four-pole.

Residual-current circuit breakers with overcurrent protection (RCCB) AVDT32/AD12/AD14

Comply with the requirements of GOST IEC 61009-1

UP TO 63 A | -25°C +55°C | ±90° | SELF-EXTINGUISHING

Residual-current circuit breakers with overcurrent protection are designed to be installed in electric networks of alternating current of 50 Hz frequency with a solidly-earthed neutral with a rated voltage not exceeding 400 V and rated currents up to 63 A, to protect people from electric shock

or electrical failures in case of unintentional contact with exposed conductive parts of electrical units, as well as to prevent combustions and fires arising due to leakage currents and earth faults and to protect against overload and short circuit currents.

Design features

The "RETURN" button allows a user to clearly identify the reason for switching off the device and signals on the presence of a dangerous current leakage in the network.

Possibility ability to self-test the functionality and correctness of the RCCB connection due to the presence of the TEST button.

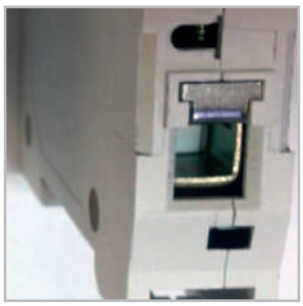

Notches on the terminal clamps provide the most tight contact, increase the mechanical strength of the connection and reduce the value of the transient resistance, thereby ensuring that the connected conductors do not overheat and melt.

Possibility to control the position of the main contacts regardless of the position of the control handle thanks to a special indicator on the front surface of the RCCB.

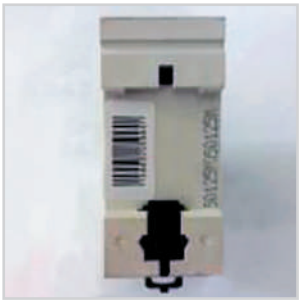

Quick and easy installation on a din-rail thanks to the two-way latch.

Possibility of operation in harsh Russian conditions at ambient temperatures from -25 to + 55 °C.

Flexibility in the implementation of various circuit solutions due to the possibility of simultaneous connection of FORK, PIN buses and a flexible conductor through the upper and lower clamps.

Comprehensive protection of electrical equipment and people through the implementation of three types of protection - against short circuit, overload and leakage currents to earth.

Designation structure

XXXX_1X_2-$X_3X_4XX_5$-X_6-UHL4

XXXX_1	- RCBO series
X_2	- Number of poles
X_3	- Value of the nominal switching differential current: 1 - 0.01 A 2 - 0.03 A 3 - 0.1 A 4 - 0.3 A
X_4	- Type of protective characteristic
XX_5	- Rated current
X_6	- Designation of the type of operating characteristic for the differential current
UHL4	- Climatic category

Example of a record of designation of a two-pole RCBO with a protective characteristic of type "C" with a rated switching differential current of 0.03 A per rated current of 25 A:
AVDT32-22C25-A-UHL4
Example of a record of designation of a two-pole RCBO with a protective characteristic of type "C" with a rated switching differential current of 0.03 A per rated current of 25 A:
AD12-22C25-AC-UHL4
Example of a record of designation of a four-pole RCBO with a protective characteristic of type "C" with a rated switching differential current of 0.3 A per rated current of 63 A:
AD14-44C63-AC-UHL4

Specifications

Parameter name	Parameter value				
Series					
	AVDT32	AD12		AD14	
Compliance with the requirements of the standard	GOST IEC 61009-1-2014				
Type of performance (according to the conditions of operation in the presence of DC component)	A	AC			
Rated current, I_n, A	16; 20; 25; 32; 40; 50; 63	16; 25; 32; 40; 50; 63	25; 40; 63	16; 25; 32; 40; 63	25; 40; 63
Rated switching differential current, $I_{\Delta n}$, A	0.03; 0,3	0.03	0.3	0.03	0.3
Rated voltage, U_e, B	230			400	
Rated not-switching differential current, $I_{\Delta no}$	0.5 $I_{\Delta n}$				
Rated maximum switching capacity, I_{cn}, A	6000	4500			
Type of protective characteristic of the electromagnetic releaser	C				
Rated maximum switching and breaking capacity for differential current, $I_{\Delta m}$, A	3000	4500			
Wear resistance, CO cycles (switching on-off), not less:					
- total	10000				
- switching (under load)	4000				
Climatic category	UHL4 acc. to GOST 15150				
Operating temperature range, °C	-25 to +55				
Break switch protection degree	IP20				
Section of connected conductors, mm^2	1.5 - 25				
Weight of RCBO, not more, kg	0.19	0.25		0.45	

Item numbers

	Name	Number of poles	Rated current, A	Type of protective characteristics	Nominal switching differential current, mA	Type of operating characteristics	Item number
	AVDT32-22C6-A-UHL4	2	6	C	30	A	228063
	AVDT32-22C10-A-UHL4	2	10	C	30	A	228064
	AVDT32-22C16-A-UHL4	2	16	C	30	A	228065
	AVDT32-22C20-A-UHL4	2	20	C	30	A	228066
	AVDT32-22C25-A-UHL4	2	25	C	30	A	228067
	AVDT32-22C32-A-UHL4	2	32	C	30	A	228068
	AVDT32-22C40-A-UHL4	2	40	C	30	A	228069
	AVDT32-23C40-A-UHL4	2	40	C	100	A	228070
	AVDT32-23C50-A-UHL4	2	50	C	100	A	228071
	AVDT32-23C63-A-UHL4	2	63	C	100	A	228072
	AD12-22C16-AC-UHL4	2	16	C	30	AC	141586
	AD12-22C25-AC-UHL4	2	25	C	30	AC	141587
	AD12-22C32-AC-UHL4	2	32	C	30	AC	141588
	AD12-22C40-AC-UHL4	2	40	C	30	AC	141591
	AD12-22C50-AC-UHL4	2	50	C	30	AC	141593
	AD12-22C63-AC-UHL4	2	63	C	30	AC	141595
	AD12-24C25-AC-UHL4	2	25	C	300	AC	141598
	AD12-24C40-AC-UHL4	2	40	C	300	AC	141601
	AD12-24C63-AC-UHL4	2	63	C	300	AC	141603
	AD14-42C16-AC-UHL4	4	16	C	30	AC	141607
	AD14-42C25-AC-UHL4	4	25	C	30	AC	141608
	AD14-42C40-AC-UHL4	4	40	C	30	AC	141609
	AD14-42C63-AC-UHL4	4	63	C	30	AC	141611
	AD14-44C25-AC-UHL4	4	25	C	300	AC	141612
	AD14-44C40-AC-UHL4	4	40	C	300	AC	141614
	AD14-44C63-AC-UHL4	4	63	C	300	AC	141617

Overall, installation and mounting dimensions

AVDT32

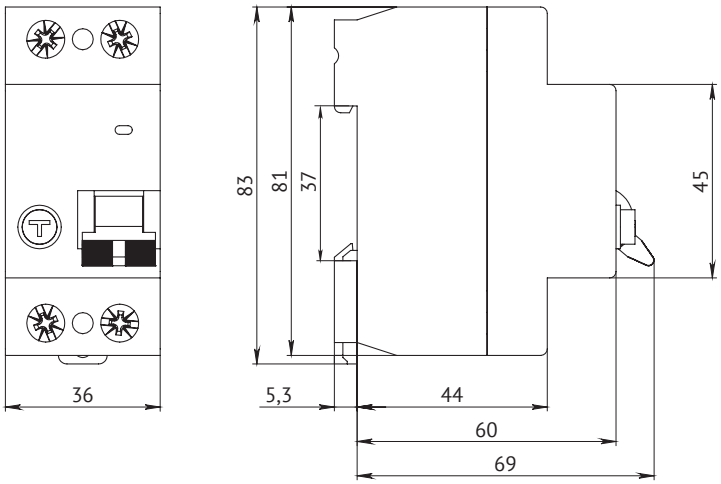

AD12

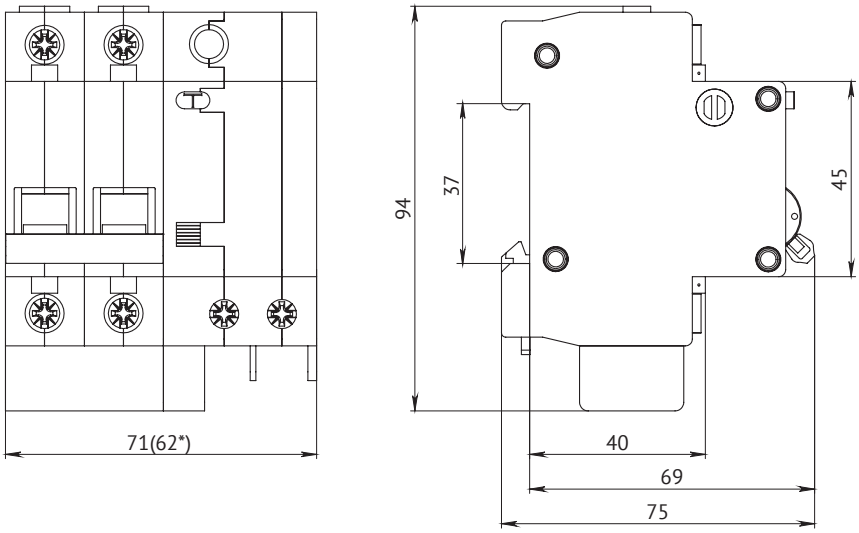

* Size for devices with rated current above 40 A

AD14

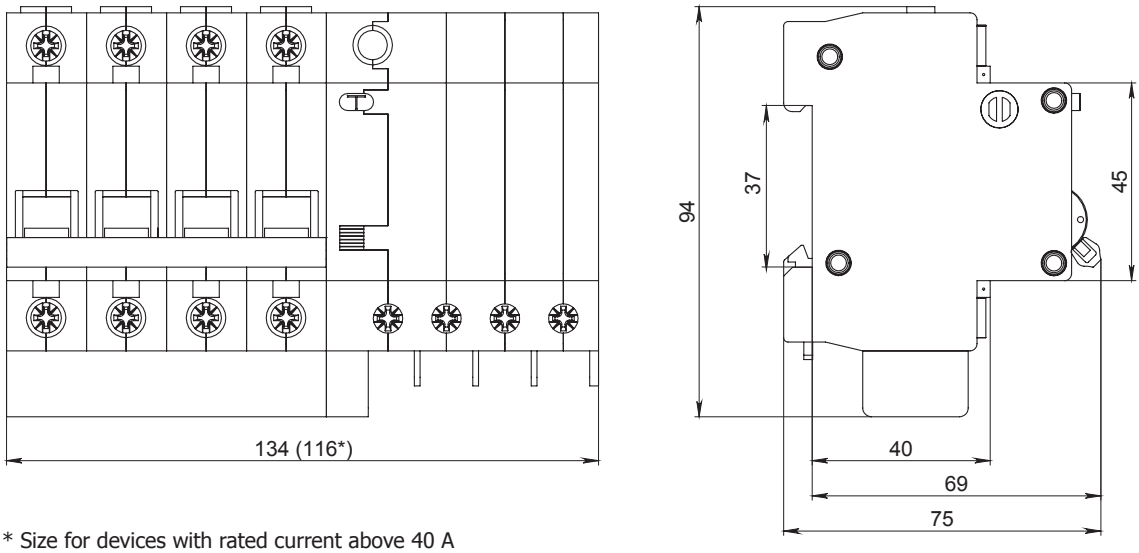

* Size for devices with rated current above 40 A

Circuit schematics

AVDT32

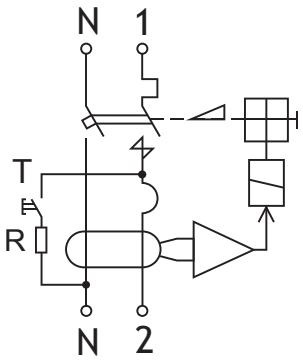

AD12

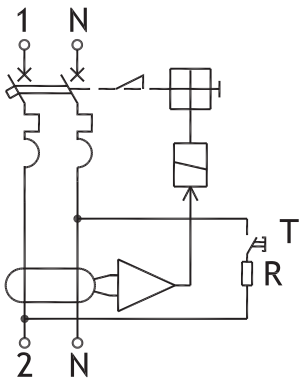

AD14

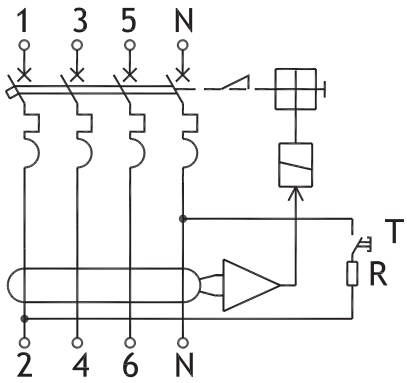

T - operational control device (TEST button)
R - current limiting resistance

Time-current switching characteristics

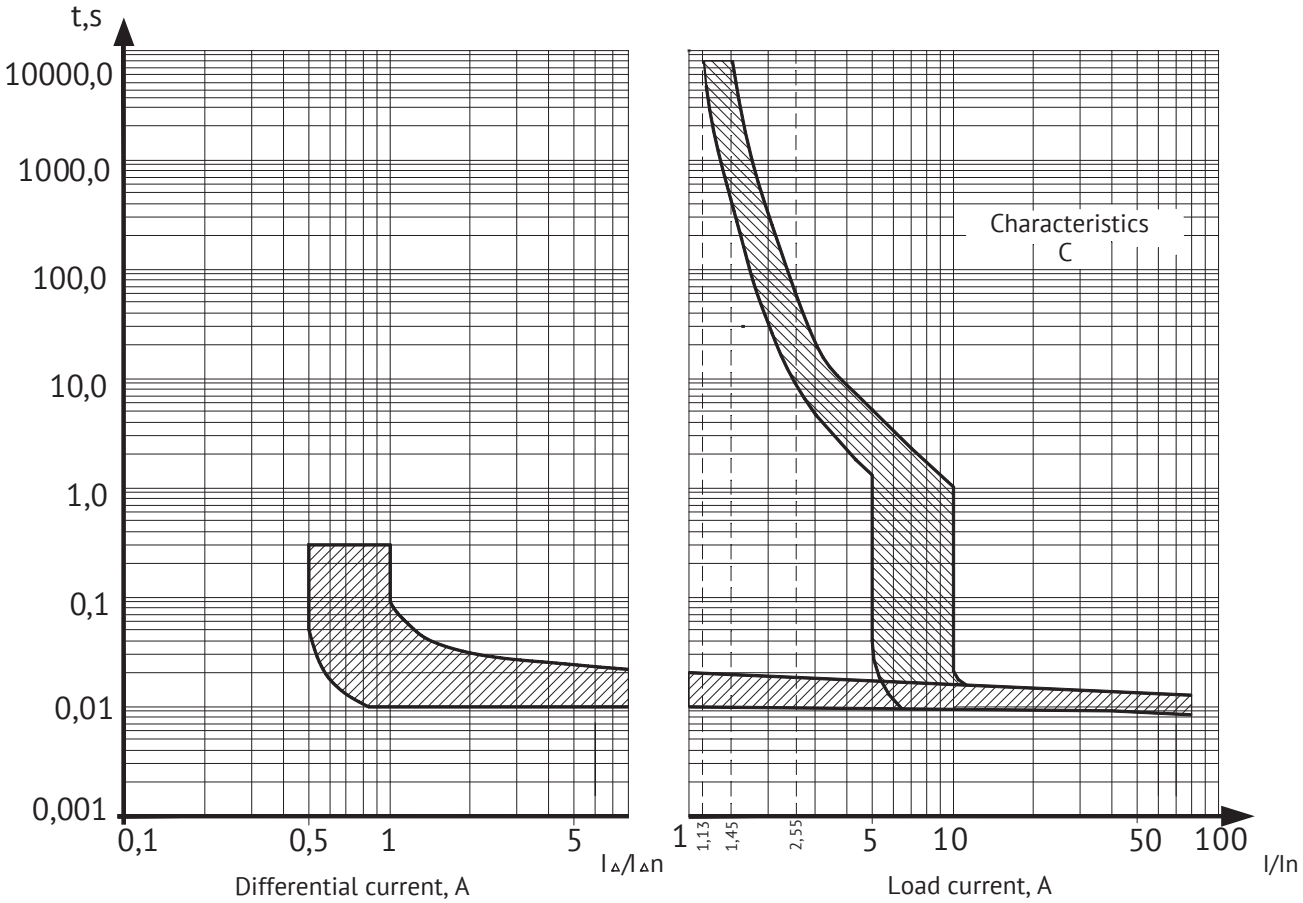

a)

a) Switching characteristic and time limits for differential current switching.
b) Protective characteristic under the conditions of action of overcurrents at the control temperature plus 30ºC, from a cold state, when current is passed through all RCBO protected poles.

Residual current circuit-breaker (RCCB) of VD1-63 series

Comply with the requirements of GOST R 513326.1

UP TO 100 A | -25°C +55°C | ±90° | SELF-EXTINGUISHING

The residual current circuit-breaker VD1-63 is designed for the use in 50 Hz AC electrical networks with a low-grounded neutral with a rated voltage not exceeding 400 V and a rated current up to 100 A to protect people from electric shock in case of electrical equipment malfunctions or inadvertent contact with exposed conductive parts of electrical units, as well as to prevent burning and fires arising due to leakage currents and short circuits to the ground and operational switching on and off of the specified circuits.

Design features

The indicator on the front surface of the RCCB allows accurately monitoring the state of the main contacts, regardless of the position of the control handle.

Self-check of the operability and correctness of the RCCB connection by the TEST button - zero costs for expensive diagnostics.

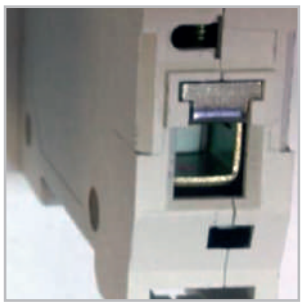

Notches on the terminal clamps provide the most tight contact, increase the mechanical strength of the connection and reduce the value of the transient resistance, thereby ensuring that connected conductors do not overheat and melt.

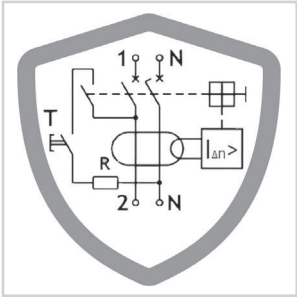

The electromechanical circuit of the RCCB provides reliable protection and stands guard over the life of a person and property against fire even in emergency situations when the conductor zero is broken.

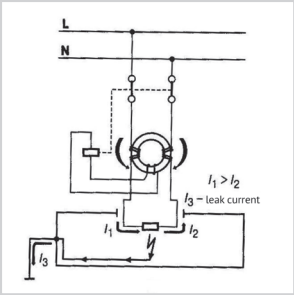

The possibility to organize protection against all types of leakage currents - alternating, constant and pulsating due to the presence of both type AC and type A.

Possibility of operation in harsh Russian conditions at ambient temperatures from -25 to + 55 °C.

Designation structure

VD1-63 - $X_1X_2XX_3$ - X_4 - UHL4

VD1-63	- Designation of RCD
X_1	- Number of poles
X_2	- Value of the nominal switching differential current: 1 - 0.01 A; 2 - 0.03 A; 3 - 0.1 A; 4 - 0.3 A
XX_3	- Value of the nominal current
X_4	- Designation of the type of operating characteristic for the differential current
UHL4	- Climatic category and category of placement

Example of a record of designation of a two-pole VD1-63 with a rated switching differential current of 0.03 A per rated current of 25 A with operating characteristics of type A:
RCD without overcurrent protection VD1-63 -4116-A-UHL4-KEAZ

Specifications

Parameter name	Parameter value	
Series		
	VD1-63	
Compliance with the requirements of the standard	GOST R 51326.1-99	
Number of poles	2P	4P
Type of performance (according to the conditions of operation in the presence of DC component)	AC, A	
Rated current, I_n, A	16; 25; 32; 40; 50; 63; 80; 100	16; 25; 32; 40; 50
Rated switching differential current, $I_{\Delta n}$, A,	0.01; 0.03; 0.1; 0,3	
Rated operating voltage, U_e, V:	230	400
Rated not-switching differential current, I_{Dno}	0.5 $I_{\Delta n}$	
Rated conditional short circuit current, $I_{\Delta no}$, A	3000	
Rated maximum switching and breaking capacity for differential current, $I_{\Delta m}$, A	1000	
Wear resistance, CO cycles (switching on-off), not less:		
- total	10000	
- switching (under load)	4000	
Climatic category	UHL4 по ГОСТ 15150	
Operating temperature range, ° C	-25 to +55	
Break switch protection degree	IP20	
Cross section of the wire attached to the terminal clamps, mm^2	1.5 - 35	
Weight VD1-63, not more, kg	0.22	0.4

Item numbers

	Name	Number of poles	Rated current, A	Nominal switching differential current, mA	Type of operating characteristics	Item number
	VD1-63-2116-AC-UHL4	2	16	10	AC	221900
	VD1-63-2125-AC-UHL4	2	25	10	AC	221901
	VD1-63-2216-A-UHL4	2	16	30	A	221927
	VD1-63-2225-A-UHL4	2	25	30	A	221928
	VD1-63-2232-A-UHL4	2	32	30	A	221929
	VD1-63-2240-A-UHL4	2	40	30	A	221930
	VD1-63-2216-AC-UHL4	2	16	30	AC	221902
	VD1-63-2225-AC-UHL4	2	25	30	AC	221903
	VD1-63-2232-AC-UHL4	2	32	30	AC	221904
	VD1-63-2240-AC-UHL4	2	40	30	AC	221905
	VD1-63-2250-AC-UHL4	2	50	30	AC	221906
	VD1-63-2263-AC-UHL4	2	63	30	AC	221907
	VD1-63-2280-AC-UHL4	2	80	30	AC	221908
	VD1-63-22100-AC-UHL4	2	100	30	AC	221909
	VD1-63-2316-AC-UHL4	2	16	100	AC	221910
	VD1-63-2325-AC-UHL4	2	25	100	AC	221911
	VD1-63-2332-AC-UHL4	2	32	100	AC	221912
	VD1-63-2340-AC-UHL4	2	40	100	AC	221913
	VD1-63-2350-AC-UHL4	2	50	100	AC	221914
	VD1-63-2363-AC-UHL4	2	63	100	AC	221915
	VD1-63-2380-AC-UHL4	2	80	100	AC	221916
	VD1-63-23100-AC-UHL4	2	100	100	AC	221917
	VD1-63-2416-AC-UHL4	2	16	300	AC	221918
	VD1-63-2425-AC-UHL4	2	25	300	AC	221919
	VD1-63-2440-AC-UHL4	2	40	300	AC	221920
	VD1-63-2450-AC-UHL4	2	50	300	AC	221921
	VD1-63-2463-AC-UHL4	2	63	300	AC	221922
	VD1-63-2480-AC-UHL4	2	80	300	AC	221923
	VD1-63-24100-AC-UHL4	2	100	300	AC	221924
	VD1-63-4116-AC-UHL4	4	16	10	AC	221944
	VD1-63-4125-AC-UHL4	4	25	10	AC	221945
	VD1-63-4216-A-UHL4	4	16	30	A	221968
	VD1-63-4225-A-UHL4	4	25	30	A	221969
	VD1-63-4232-A-UHL4	4	32	30	A	221970
	VD1-63-4240-A-UHL4	4	40	30	A	221971
	VD1-63-4216-AC-UHL4	4	16	30	AC	221946
	VD1-63-4225-AC-UHL4	4	25	30	AC	221947
	VD1-63-4232-AC-UHL4	4	32	30	AC	221948
	VD1-63-4240-AC-UHL4	4	40	30	AC	221949
	VD1-63-4250-AC-UHL4	4	50	30	AC	221950
	VD1-63-4325-AC-UHL4	4	25	100	AC	221954
	VD1-63-4332-AC-UHL4	4	32	100	AC	222724
	VD1-63-4340-AC-UHL4	4	40	100	AC	221955
	VD1-63-4350-AC-UHL4	4	50	100	AC	221956
	VD1-63-4416-AC-UHL4	4	16	300	AC	222725
	VD1-63-4425-AC-UHL4	4	25	300	AC	221960
	VD1-63-4432-AC-UHL4	4	32	300	AC	222726
	VD1-63-4440-AC-UHL4	4	40	300	AC	221961
	VD1-63-4450-AC-UHL4	4	50	300	AC	221962

Overall, installation and mounting dimensions

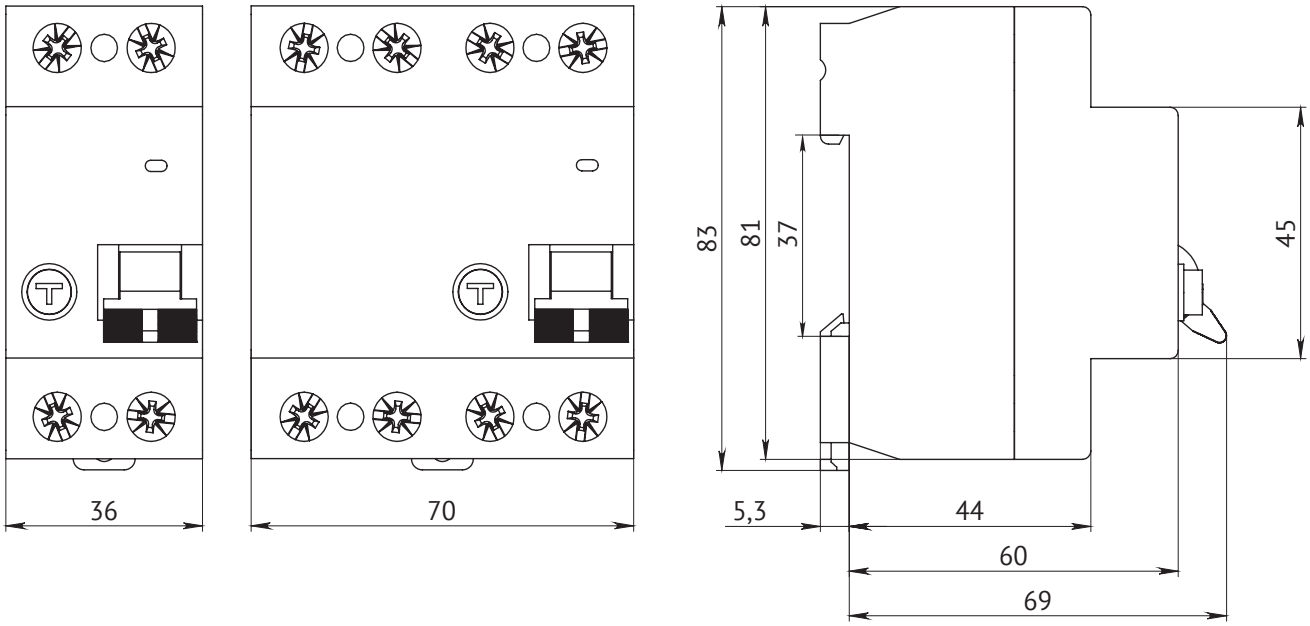

Circuit schematics

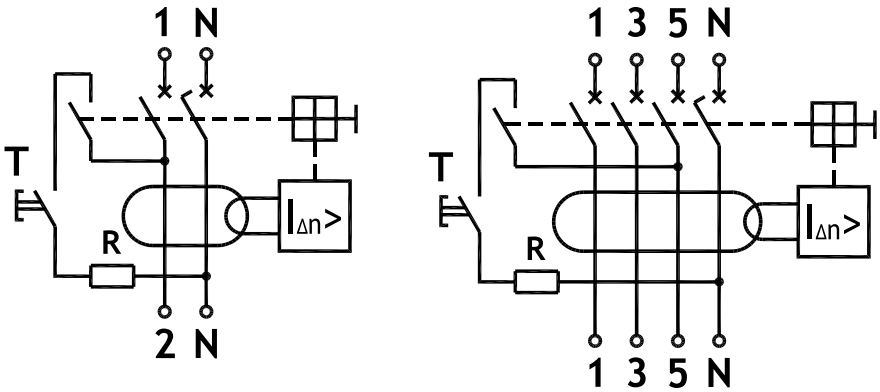

a) two-pole VD1-63

b) four-pole VD1-63

T - operational control device (TEST button)
R - current limiting resistance

2 MOULDED CASE CIRCUIT BREAKERS

BA57 series molded case circuit breakers

Complies with the requirements of ГОСТ Р 50030.2 ТР ТС 004/2011 ТР ТС 001/2011

12,5 A to 800 A | 110кА MSC | -60°C +45°C | ±90° | DOES NOT SUPPORT FUEL | NPP | RIVER REGISTER | MARITIME REGISTER | EAC | RUSSIAN RAILWAYS

Automatic circuit breakers of the BA57 series are designed for operation in low-voltage switchgears of alternating current with voltage up to 690 V, frequency of 50 and 60 Hz and direct current with voltage up to 440 V. Circuit breakers of the BA57 series are designed to protect electrical installations from short-circuit currents and overloads, and are designed for infrequent operational switching on and off. Circuit breakers approved by the Russian Maritime Register of Shipping (hereinafter RS) and the Russian River Register (hereinafter RRR) are designed to protect electrical equipment on ships, offshore fixed platforms and floating drilling rigs.

Benefits

- Implementation of any technical solutions
  - full range of nomenclature for operating currents from 12,5 to 800 A;
  - high values of the limiting switching capacity 110 kA (DC), 44 kA (AC);
  - a wide range of fixed settings for electromagnetic releases;
  - versions with adjustable thermal and electromagnetic releases allow adjustments under load during commissioning and operation, modernize power supply systems (increase the load), adjust the selectivity of protection;
  - a wide range of additional devices, including the presence of a zero voltage release (ZVR).
- Confidence in reliable performance
  - the ability to carry a limited short-circuit current (exclusive current limitation);
  - availability of a margin of resistance to dynamic and thermal action of short-circuit currents;
  - guarantee of non-weldability of contacts in case of emergency short-circuit currents.
- Advanced applications
  - protection of electrical equipment of sea and river vessels, port infrastructure, offshore fixed platforms, floating drilling rigs, confirmed by RS and RRR type approval certificates;
  - NPP electrical equipment protection, confirmed by the NPP license;
  - he possibility of using in harsh operating conditions, climatic versions UHL - temperate and cold climate and OM - general climatic marine version.

Distinctive features

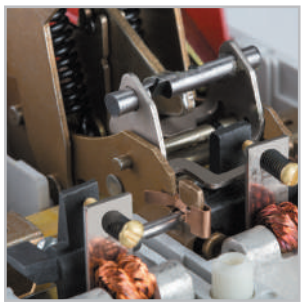

Reinforced contact system with electrodynamic contact rejection.

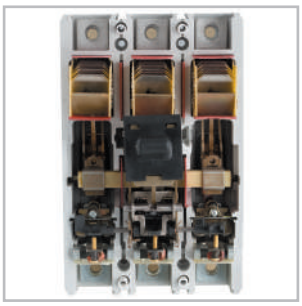

Application in the contact system of extruded silver-graphite contacts.

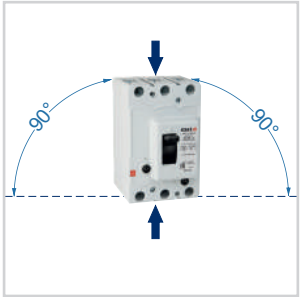

Mount vertically or rotate right/left 90˚. Top and bottom power supply.

Operating temperature from -60 to + 45°C.

Equipment

Fasteners for circuit breaker installation (BA57-31, BA57-35, BA57Ф35)

Set of clamps for connecting copper busbars and conductors with cable lugs (BA57-35, BA57Ф35)

Interpole barriers (BA57-39)

Terminal cover (BA57-31, BA57-35, BA57Ф35)

Fasteners for circuit breaker installation (BA57-39)

Set of clamps for connecting copper busbars and conductors with cable lugs (BA57-39)

Set of lead-over busbars (BA57-39 800 A)

The structure of the symbol BA57-31, BA57-35, BA57Ф35, BA57-39

BA57 $X_1X_2X_3$ - $X_4X_5X_6X_7X_8X_9$ - X_{10}...A- X_{11}...-X_{12}...-X_{13}...-X_{14}...-X_{15}...-X_{16}...-KEAZ X_{17}...

BA57	- Circuit breaker series designation
X_1	- Separating mark (-) or letter designation Ф (for BA57Ф35)
X_2X_3	- Circuit breaker rated current designation: 31 - up to 100 A (overall dimensions WxDxH: 75x125x117); 35 - up to 250 A (overall dimensions WxDxH: 112,2x174,5x130); 39 - up to 800 A (overall dimensions WxDxH: 225x224x154)
X_4X_5	- Designation of the version of the circuit breaker according to the number of poles, voltage on alternating and direct current, combination of overcurrent releases in the protection zone:

Designation designation	Number of poles	Number of protected poles	Availability of release		Availability of the circuit breaker			
			thermal	electromagnetic	BA57-31	BA57Ф35	BA57-35	BA57-39
33	3	3	-	+**	up to 690AC	-	up to 690AC	up to 690AC
34			+**	+**		up to 400AC		
36			-	+ (5...10In)*	-	-		-
37			+ (0,8...1In)*	+**	-	-		-
38			+**	+ (5...10In)*	-	-		-
39			+ (0,8...1In)*	+ (5...10In)*	-	-		-
63	3	2	-	+**	-	-	up to 440DC	up to 440DC
64			+**	+**	-	-		
83	2	2	-	+**	up to 220DC/690AC	-	up to 220DC/690AC	up to 220DC/690AC
84			+**	+**		-		

* - adjustable setting of the release ** - fixed setting of the release

X_6X_7

- Designation fulfilment for the presence of additional assembly units *** and their combinations:

the code	00	11**	12**	13	15	18**	23	25	45	46	47	49	52	54	56	62
HP	-	-	+	-	-	+	-	-	-	-	+	-	-	-	-	+
UVR	-	-	-	+	-	-	+	-	-	-	-	-	+	-	+	-
ZVR	-	-	-	-	+	-	-	+	-	-	-	+	-	+	-	-
with drive	-	2«z»+1«p»*	-	-	-	1«z»+1«p»*	2«z»+1«p»*	2«z»+1«p»*	-	2«z»+1«p»*	1«z»+1«p»*	-	-	2«z»+1«p»*	2«z»+1«p»*	-
without drive	-	2«z»+2«p»	-	-	-	1«z»+2«p»	2«z»+2«p»	2«z»+2«p»	-	2«z»+2«p»	1«z»+2«p»	-	-	2«z»+2«p»	2«z»+2«p»	-
air-oxygen mixture	-	-	-	-	-	-	-	-	+	+	+	+	+	+	+	+

** for circuit breakers with an electromagnetic drive are available to order only with auxiliary contacts*
*** according to the availability of additional assembly units BA57-31 there can be only 11, 12, 18 versions*
**** additional assembly units, including an electromagnetic drive (EMI), a pull-out basket are installed only at the factory manufacturer.*

X_8X_9

Conventional designation of the type of drive, additional mechanisms and installation method of the circuit breaker:
10 - manual drive, stationary design;
16 - manual drive, stationary design, there is a device for locking the circuit breaker in the "Off" position (only BA57-35 and BA57-39);
30 - electromagnetic drive, stationary version (only BA57-35 and BA57-39);
40 - manual drive, withdrawable version (only BA57-39);
50 - withdrawable version with a manual remote drive for operating through the switchgear door (only for BA57-35, BA57-39)
51 - retractable design with a manual remote drive for operating through the switchgear door of reduced depth (only for BA57-39);
70 - electromagnetic drive, withdrawable design (only BA57-35 and BA57-39)

X_{10}...A	- Circuit breaker rated current
X_{11}...	- Setting of short-circuit releases (only for circuit breakers with fixed setting)
X_{12}...	- Rated voltage and type of current of the main circuit: up to 690AC - for AC circuit breakers; up to 440DC - for DC circuit breakers
X_{13}...	- Parameters of shunt release (HP), undervoltage release (UVR), zero voltage release (ZVR) (if any): rated voltage and current type
X_{14}...	- Parameters of the electromagnetic drive (ED) (if any): rated voltage and current type
X_{15}...	- Climatic designation and placement category: OM4 (only for BA57-31, BA57-35, BA57-39 with the acceptance of the Russian Maritime Register of Shipping); UHL 3
X_{16}...	- Acceptance type, delivery terms: REG - acceptance of the Russian Maritime Register of Shipping or the Russian River Register (except for BA57Ф35); NPP - for supplies to NPPs (except for BA57Ф35); in the absence - acceptance by quality control department
KEAZ	- Trademark
X_{17}...	- (Plug-in, without panel) - plug-in version of the circuit breaker, without plug-in panel (only for BA57-35)

The BA57-3X-XXXX15 version has been removed from the assortment, instead it is the BA57-3X-XXXX10 version + Remote hand drive BA04-36/BA51- 35/ BA57-35/BA57-39- UHL 3 (art. 110450).

Formulation of the order.
When ordering a circuit breaker, you must specify:
1) Name, standard performance;
2) Rated current of the releases;
3) The setting of the electromagnetic release for short-circuit current protection (only for circuit breakers with a fixed setting);
4) Rated voltage and type of current of the main circuit;
5) Kind of current and rated voltage Uc of releases: independent (HP), minimum voltage (UVR) or zero voltage (ZVR) - if necessary;
6) Type of current and nominal voltage Us of the electromagnetic drive (ED) - if necessary;
7) Climatic modification and category of placement;
8) Acceptance type, delivery conditions (quality control department - not specified);
9) Trademark.
10) Mounting type - (plug-in, without panel) - plug-in version of the circuit breaker, without plug-in panel (only BA57-35). - if necessary.

Supplied upon separate order:
- adapter for mounting the BA57-31 circuit breaker on a DIN-rail;
- terminal cover for BA57;
- terminal cover for front connection BA57-39;
- special clamps for connecting conductors for BA57-35, BA57Ф35, BA57-39;
- manual remote drive for BA57-35, BA57Ф35, BA57-39 (except for switches with an electromagnetic drive);
- set of expansion terminals BA57-35, BA57Ф35;
- set of interpole partitions BA57-35, BA57Ф35, BA57-39;
- set of adapter busbars for BA57-39;
- set of leads for rear connection for BA57-39;
- plug-in panel BA57-35;
- a set for a switch for installation on a plug-in panel BA57-35;
- insulating screens for plug-in panel BA57-35;
- plug for secondary circuits MSTB-2.5/13 for BA57;
- socket for secondary circuits UMSTBVK-2.5/13 for BA57.

Specifications

Parameter name	Parameter designation																						
Series																							
	BA57-31										BA57Ф35												
	BA57-31-X3	BA57-31-X4									BA57Ф35-34												
Rated current (In), A	100	16	20	25	31,5	40	50	63	80	100	16	20	25	31,5	40	50	63	80	100	125	160	200	250
Rated voltage (Ue), V	up to 690 AC; 220 DC										up to 400 AC												
Thermal release	is absent	fixed									fixed												
Setting of the electromagnetic release on alternating current, A	400 800 **1200**	**400**					400 **800**		400 800 **1200**		**10 In**												
Setting of the electromagnetic release on direct current, A	500 1000 1200	500					500 1000		500 1000 1200		-												
Rated ultimate short-circuit breaking capacity (Icu), kA																							
at 400 AC	40	4	6	25	40						3,5	6	10				15						
at 690 AC	6	3			6						-												
at 220 DC	75	20		40	75						-												
at 440 DC	-	-									-												
Rated service breaking capacity (Ics)																							
% of Icu	50										100						75						
Rated short-circuit making capacity (Icm), kA																							
at 400 AC	84	6	9	52	84						5	9	17				30						
at 690 AC	9	4,2			9						-												
at 220 DC	75	20		40	75						-												
at 440 DC	-	-									-												
Wear resistance																							
General, VO cycles	16000										10000												
Switching, VO cycles	10000										2500												
Dimensions	75x125x117										112,2x174,5x130												
Weight, kg	no more than 1,1										no more than 2,7												

The set point of the magnetic release in bold is the basic setting.

The voltage supply from the power source is possible both from the side of fixed contacts (terminals 1, 3, 5) and from the side of moving contacts (terminals 2, 4, 6), while the values of the rated ultimate short-circuit breaking capacity Icu and the rated working breaking capacity Ics remain unchanged.

Examples of entries for circuit breakers when ordering and in documentation for other products:
1) Circuit breaker BA57-31, three-pole with fixed short-circuit current and overload current releases for rated current 100 A, with a setting for operating current 1200 A, with two break and two make auxiliary contacts:
«Automatic circuit breaker BA57-31-341110-100A-1200-690AC-UHL3-KEAZ»

2) Circuit breaker of BA57Ф35 type, three-pole with fixed short-circuit current and overload current releases for rated current 200 A, with setting for operating current 2000 A, without additional devices:
«Automatic switch BA57F35-340010-200A-2000-400AC-UHL3-KEAZ»

Parameter name	Parameter designation																			
Series																				
	BA57-35																			
	BA57-35-X3		BA57-35-X4													BA57-35-X6				
Rated current (In), A	80	250	16	20	25	31,5	40	50	63	80	100	125	160	200	250	100	125	160	200	250
Rated voltage (Ue), V	up to 690 AC; 440 DC																			
Thermal release	is absent		fixed													is absent				
Setting of the electromagnetic release on alternating current, A	500 **800** 1000 1250	500 750 1000 1250 1600 **2500**	80 125 **160** 200 320	80 100 **200** 250 320	100 125 **250** 320	100 125 160 **320** 400 630	125 160 250 **400** 500 630	160 250 **500** 630	*630 **800** 1250	*630 **800** 1000 1250	*630 **1000** 1250	*630 800 **1250** 1600	*630 800 1000 **1600** 2000	*630 1000 1250 1600 **2000** 2500	*750 1000 1250 1600 **2500**	5...10In				
Setting of the electromagnetic release on direct current, A	800 1000 1250	750 1000 1250 1600 2500	125 160 200 320	100 200 250 320	125 250 320	125 160 320 400 630	160 250 400 500 630	250 500 630	800 1250	800 1000 1250	1000 1250	800 1250 1600	800 1000 1600 2000	1000 1250 1600 2000 2500	750 1000 1250 1600 2500	5...10In				
Rated ultimate short-circuit breaking capacity (Icu), kA																				
at 400 AC	40		3,5	6	10		15		20	25	30	35		40		44				
at 690 AC	18		3,5	5,5	9		12			15		18				18				
at 220 DC	110		5	6	15		35		40	60	80	100		110		80	100		110	
at 440 DC	110		5	6	15		35		40	60	80	100		110		80	100		110	
Rated service breaking capacity (Ics)																				
% of Icu	100																			
Rated short-circuit making capacity (Icm), kA																				
at 400 AC	84		5	9	17		30		40	52,5	63	73,5		84		92,4				
at 690 AC	36		5	8,2	15,3		24			30		36				36				
at 220 DC	110		5	6	15		35		40	60	80	100		110		80	100		110	
at 440 DC	110		5	6	15		35		40	60	80	100		110		80	100		110	
Wear resistance																				
General, VO cycles	10000																			
Switching, VO cycles	2500																			
Dimensions	112,2x174,5x130																			
Weight, kg	no more than 2,7																			

* *It is allowed to manufacture switches with a setting of 500 A for special order.*
The setting of the electromagnetic release in bold is the basic setting.

The voltage supply from the power supply is possible both from the side of fixed contacts (terminals 1, 3, 5) and from the side of moving contacts (terminals 2, 4, 6), while the values of the rated ultimate short-circuit breaking capacity Icu and the rated working breaking capacity Ics remain unchanged.

Examples of entries for circuit breakers when ordering and in documentation for other products:
1) Circuit breaker type BA57-35, three-pole with fixed short-circuit and overload current releases for a rated current of 250 A, with a tripping current setting of 2000 A, with a shunt release for a voltage (Uc) 230 V AC, frequency 50, 60 Hz and 220 V DC, with one NC and one NC auxiliary contacts, electromagnetic drive for voltage 230 V AC with a frequency of 50, 60 Hz, plug-in version, without plug-in panel:
«Automatic switch BA57-35-341830-250A-2000-690AC-HP230AC/220DC-ПЭ230AC-UHL3-KEAZ (plug-in, without panel)»

2) Circuit breaker type BA57-35, three-pole, with two protected poles, with fixed short-circuit current and overload current releases, rated direct current 250 A, voltage 440 V, with a setting for operating current 1600 A, with two break and two make auxiliary contacts:
«Automatic switch BA57-35-641110-250A-1600-440DC-UHL3-KEAZ»

Parameter name	Parameter designation																						
Series																							
	BA57-35																						
	BA57-35-X7													BA57-35-X8					BA57-35-X9				
Rated current (In), A	16	20	25	31,5	40	50	63	80	100	125	160	200	250	100	125	160	200	250	100	125	160	200	250
Rated voltage (Ue), V	up to 690 AC; 440 DC																						
Thermal release	adjustable (0,8...1In)													fixed					adjustable (0,8...1In)				
Setting of the electromagnetic release on alternating current, A	80 125 **160** 200 320	80 100 **200** 250 320	100 125 **250** 320	100 125 160 **320** 400 630	125 160 250 **400** 500 630	160 250 **500** 630	*630 **800** 1250	*630 **800** 1000 1250	*630 **1000** 1250	*630 800 **1250** 1600	*630 800 1000 **1600** 2000	*630 1000 1250 1600 **2000** 2500	*750 1000 1250 1600 **2500**	5...10In						5...10In				
Setting of the electromagnetic release on direct current, A	125 160 200 320	100 200 250 320	125 250 320	125 160 320 400 630	160 250 400 500 630	250 500 630	800 1250	800 1000 1250	1000 1250	800 1250 1600	800 1000 1600 2000	1000 1250 1600 2000 2500	750 1000 1250 1600 2500	5...10In						5...10In				
Rated ultimate short-circuit breaking capacity (Icu), kA																							
at 400 AC	3,5	6	10		15		20	25	44					44					44				
at 690 AC	3,5	5,5	9		12			15	18					18					18				
at 220 DC	5	6	15		35		40	60	80	100		110		80	100		110		80	100		110	
at 440 DC	5	6	15		35		40	60	80	100		110		80	100		110		80	100		110	
Rated service breaking capacity (Ics)																							
% of Icu	100																						
Rated short-circuit making capacity (Icm), kA																							
at 400 AC	5	9	17		30		40	52,5	92,4					92,4					92,4				
at 690 AC	5	8,2	15,3		24			30	36					36					36				
at 220 DC	5	6	15		35		40	60	80	100		110		80	100		110		80	100		110	
at 440 DC	5	6	15		35		40	60	80	100		110		80	100		110		80	100		110	
Wear resistance																							
General, VO cycles	10000																						
Switching, VO cycles	2500																						
Dimensions	112,2x174,5x130																						
Weight, kg	no more than 2,7																						

It is allowed to manufacture switches with a setting of 500 A according to spec. order.
The setting of the electromagnetic release in bold is the basic setting.

Examples of entries for circuit breakers when ordering and in documentation for other products:
1) Circuit breaker type BA57-35, three-pole with fixed short-circuit releases and adjustable overcurrent releases for rated current 63 A, with setting for operating current 630 A and overload current adjustment range 50,4...63 A, with shunt release for voltage (Uc) 230 VAC, frequency 50, 60 Hz and 220 VDC, with two NC and one NC auxiliary contacts and auxiliary contacts for signaling automatic shutdown:
«Automatic switch BA57-35-374710-63A-630-690AC-HP230AC/220DC-UHL3»

2) Circuit breaker of type BA57-35, three-pole with adjustable short-circuit current releases and adjustable overload releases for rated current 160 A, with setting for operating current adjustable in the range 800...1600A and overload current adjustment range 125...160A with shunt release for voltage (Uc) 230 VAC, frequency 50, 60 Hz and 220 VDC, with two NC and one NC auxiliary contacts:
«Automatic switch BA57-35-391810-160A-690AC-HP230AC/ 220DC-UHL3-KEAZ»

Circuit breakers with adjustable overcurrent releases have current setting regulators.

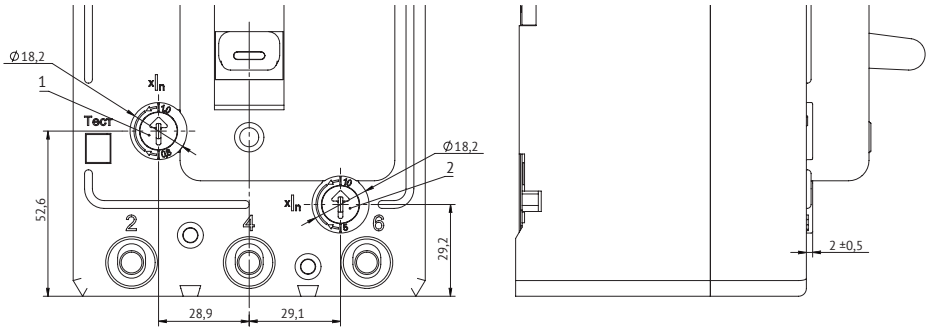

Breaker with adjustable overcurrent releases.
1 - regulator of current settings of maximum overload current releases;
2 - regulator of current settings of overcurrent releases.

The sector of rotation of the regulators and the adjustment limits are indicated by the marking.

Parameter name	Parameter designation								
Series									
	BA57-39								
	BA57-39-X3			BA57-39-X4					
Rated current (In), A	400	630	800	250	320	400	500	630	800
Rated voltage (Ue), V	up to 690 AC; 440 DC								
Thermal release	is absent			fixed					
Setting of the electromagnetic release on alternating current, A	1000 1250 1600 2000 2500 3200 **4000**	1000(2) 1250(2) 1600 2000 2500 3200 4000 5000 **6300**	2500 3200 4000 5000 **6300**	1000 1250 1600 **2500**	1000 1250 1600 2000 2500 **3200**	1000(1) 1250 1600 2000 2500 **4000**	1000(1) 1600 2000 2500 **5000**	1250(2) 1600 2000 2500 3200 4000 5000 **6300**	2500 3200 4000 5000 **6300**
Setting of the electromagnetic release on direct current, A	1250 1600 2000 2500 3200 **4000**	1250(2) 1600(2) 2000 2500 3200 4000 **5000**	3200 4000 **5000**	1250 1600 **2500**	1250 1600 2000 2500 **3200**	1250(1) 1600 2000 2500 **4000**	1600(1) 2000 2500 **5000**	2000 2500 3200 4000 **5000**	2500 3200 4000 **5000**
Rated ultimate short-circuit breaking capacity (Icu), kA, with voltage supply from sides 1, 3, 5/2, 4, 6									
at 400 AC	40/35	40/15		40/35			40/15		
at 690 AC	18/18	18/7,5		18/18			18/7,5		
at 220 DC	110/40	110/25		110/40			110/25		
at 440 DC	110/40	110/25		110/40			110/25		
Rated service breaking capacity (Ics)									
% of Icu	100								
Rated short-circuit making capacity (Icm), kA, with voltage supply from sides 1, 3, 5/2, 4, 6									
at 400 AC	84/73,5	84/30		84/73,5			84/30		
at 690 AC	36/36	36/12,7		36/36			36/12,7		
at 220 DC	110/40	110/25		110/40			110/25		
at 440 DC	110/40	110/25		110/40			110/25		
Wear resistance									
General, VO cycles	8000 (up to 630A) 5000 (up to 800A)								
Switching, VO cycles	1500								
Dimensions	225x224x154								
Weight, kg	no more than 6,6								

It is allowed to manufacture special circuit breakers. on order with the setting of the electromagnetic release:
1) - for stationary execution;
2) - for a stationary version with an operating current not exceeding 0,9 of the rated current (IR = max 0,9In).

An example of recording circuit breakers when ordering and in the documentation of other products:
Circuit breaker BA57-39 with fixed short-circuit and overload current releases for a rated current of 400 A, with a tripping current setting of 4000 A, with a shunt release for a voltage (Uc) of 230 VAC, frequencies of 50, 60 Hz and 220 VDC, with one NC and one NC auxiliary contacts, electromagnetic drive for 400 V AC with a frequency of 50, 60 Hz:
«Automatic circuit breaker BA57-39-341830-400A-4000-690AC-HP230AC/ 220DC-ED400AC-UHL3-KEAZ»

Articles

Appearance	Name	Number of poles	Rated current, A	Rated voltage, V	Rated ultimate short-circuit breaking capacity at 400 V AC Icu, kA	Article
	BA57-31-340010-16A-400-690AC-UHL3	3	16	690	4	108430
	BA57-31-340010-20A-400-690AC-UHL3	3	20	690	6	108431
	BA57-31-340010-25A-400-690AC-UHL3	3	25	690	25	108432
	BA57-31-340010-31,5A-400-690AC-UHL3	3	31,5	690	40	108433
	BA57-31-340010-40A-400-690AC-UHL3	3	40	690	40	108434
	BA57-31-340010-50A-800-690AC-UHL3	3	50	690	40	108439
	BA57-31-340010-63A-800-690AC-UHL3	3	63	690	40	108440
	BA57-31-340010-80A-1200-690AC-UHL3	3	80	690	40	108428
	BA57-31-340010-100A-1200-690AC-UHL3	3	100	690	40	108427
	BA57-35-340010-16A-160-690AC-UHL3	3	16	690	3,5	108581
	BA57-35-340010-20A-200-690AC-UHL3	3	20	690	6	108591
	BA57-35-340010-25A-250-690AC-UHL3	3	25	690	10	108596
	BA57-35-340010-31,5A-320-690AC-UHL3	3	31,5	690	10	108604
	BA57-35-340010-40A-400-690AC-UHL3	3	40	690	15	108606
	BA57-35-340010-50A-500-690AC-UHL3	3	50	690	15	108613
	BA57-35-340010-63A-800-690AC-UHL3	3	63	690	20	108625
	BA57-35-340010-80A-800-690AC-UHL3	3	80	690	25	108626
	BA57-35-340010-100A-1000-690AC-UHL3	3	100	690	30	108566
	BA57-35-340010-125A-1250-690AC-UHL3	3	125	690	35	108576
	BA57-35-340010-160A-1600-690AC-UHL3	3	160	690	35	108586
	BA57-35-340010-200A-2000-690AC-UHL3	3	200	690	40	108594
	BA57-35-340010-250A-2500-690AC-UHL3	3	250	690	40	108600
	BA57-35-370010-16A-160-690AC-UHL3	3	16	690	3,5	293571
	BA57-35-370010-25A-250-690AC-UHL3	3	25	690	10	293570
	BA57-35-370010-31,5A-320-690AC-UHL3	3	32	690	10	293565
	BA57-35-370010-40A-400-690AC-UHL3	3	40	690	15	293564
	BA57-35-370010-63A-630-690AC-UHL3	3	63	690	20	293563
	BA57-35-370010-80A-800-690AC-UHL3	3	80	690	25	296378
	BA57-35-390010-100A-690AC-UHL3	3	100	690	44	293562
	BA57-35-390010-125A-690AC-UHL3	3	125	690	44	296379
	BA57-35-390010-160A-690AC-UHL3	3	160	690	44	293561
	BA57-35-390010-200A-690AC-UHL3	3	200	690	44	296380
	BA57-35-390010-250A-690AC-UHL3	3	250	690	44	293548
	BA57Ф35-340010-16A-160-400AC-UHL3	3	16	400	3,5	109301
	BA57Ф35-340010-20A-200-400AC-UHL3	3	20	400	6	109311
	BA57Ф35-340010-25A-250-400AC-UHL3	3	25	400	10	109315
	BA57Ф35-340010-31,5A-315-400AC-UHL3	3	31,5	400	10	151418
	BA57Ф35-340010-40A-400-400AC-UHL3	3	40	400	10	109325
	BA57Ф35-340010-50A-500-400AC-UHL3	3	50	400	10	109332
	BA57Ф35-340010-63A-630-400AC-UHL3	3	63	400	15	151417
	BA57Ф35-340010-80A-800-400AC-UHL3	3	80	400	15	109344
	BA57Ф35-340010-100A-1000-400AC-UHL3	3	100	400	15	109286
	BA57Ф35-340010-125A-1250-400AC-UHL3	3	125	400	15	109296
	BA57Ф35-340010-160A-1600-400AC-UHL3	3	160	400	15	109307
	BA57Ф35-340010-200A-2000-400AC-UHL3	3	200	400	15	109314
	BA57Ф35-340010-250A-2500-400AC-UHL3	3	250	400	15	109319
	BA57-39-340010-250A-2500-690AC-UHL3	3	250	690	40	109876
	BA57-39-340010-320A-3200-690AC-UHL3	3	320	690	40	109881
	BA57-39-340010-400A-4000-690AC-UHL3	3	400	690	40	109883
	BA57-39-340010-500A-5000-690AC-UHL3	3	500	690	40	109885
	BA57-39-340010-630A-5000-690AC-UHL3	3	630	690	40	109886
	BA57-39-340010-800A-5000-690AC-UHL3	3	800	690	40	223012

You can find a complete list of all versions of BA57 circuit breakers on the website www.keaz.ru

Contents of delivery

Name	BA57-31	BA57-35	BA57-35 retractable design	BA57Φ35	BA57-39	BA57-39 retractable design
Circuit breaker series BA57	+	+	+	+	+	+
Fasteners for circuit breaker installation	+	+	+	+	+	+
Set of clamps for connecting copper busbars and conductors with cable lugs	+	+	+	+	+	+
Interpole partitions	-	-	-	-	+	-
Terminal cover	+	+	-	+	-	-
Key for moving the circuit breakers - 2 pcs.	-	-	+	-	-	-
Key for locking the handle (with manual remote control)	-	-	+	-	-	+
Set of adapter bars - 6 pcs.	-	-	-	-	+ (for 800 A)	-
Operation manual (combined with the passport)	+	+	+	+	+	+

Additional devices BA57-31, BA57-35, BA57-39

Shunt trip HP

The HP shunt trip will trip the closed circuit breaker when AC or DC voltage is applied to the release coil terminals. The shunt trip will trip in all operating conditions when the mains supply voltage remains between 70% and 110% of the rated voltage. The rated operating mode of the shunt release is short-time. In the BA57-31, BA57-35, BA57-39 devices, the shunt release is connected via add. contact. The shunt release is installed in circuit breakers of the BA57-31, BA57- 35, BA57-39 series only at the factory.

Specifications

Operating voltage U_c	110 V, 50Hz 230 V, 50Hz 400 V, 50Hz 24 V DC (only BA57-35, BA57-39) 110 V DC 220 V DC
Operating voltage range	(0,7-1,1) U_e
Power consumption, VA	250 V*A AC 300 W DC

Releases of zero (ZVR) and minimum (UVR) voltage

ZVR

- provides disconnection of the closed circuit breaker without time delay at voltages at the terminals of its coil within 45-10% of the nominal;
- does not turn off the closed switch when the voltage at the terminals of its coil is higher than 55% of the nominal;
- does not prevent the circuit breaker from turning on when the voltage at the terminals of its coil is 85% of the nominal and higher;
- prevents the circuit breaker from closing at a voltage of 10% of the nominal and below.

Except BA57-31.

UVR

- provides disconnection of the closed circuit breaker without time delay when the voltage at the terminals of its coil is within 70-35% of the nominal;
- does not turn off the closed switch when the voltage at the terminals of its coil is higher than 70% of the nominal;
- does not prevent the circuit breaker from turning on when the voltage at the terminals of its coil is 85% of the nominal and higher;
- prevents the circuit breaker from closing at 35% or less.

Zero and undervoltage releases are installed in circuit breakers of the BA57-35, BA57-39 series only at the factory.

Specifications

Current type	AC				DC	
Operating voltage U_e, V	24	110	230	400	110	220
Switch-on voltage range	>0,85U_e					
Cut-off voltage	<0,7U_e					
Power consumption	10 V*A				10 W	

BA57-35, 39 Locking device

Designed to lock the circuit breaker in the "off" position to ensure the safety of people when repairing and maintaining equipment. The locking device is installed on the BA57-35 and BA57-39 switches only at the factory.

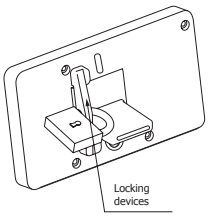

Auxiliary contacts (AC)

Auxiliary contacts are designed to signal the switching position of the main contacts (closed/open). Auxiliary contacts comply with ГОСТ IEC 60947-5-1. The letter of the shape of the contact element Za (double break contact element with four leads in two directions).
Rated insulation voltage (Ui), V: 400.
Conventional thermal current (Ithe), A: 5.
Minimum making capacity on alternating current: 5 mA at 17 V.

Circuit parameters in the AC-15 utilization category			Circuit parameters in the category of use DC-13		
Rated operating voltage, V	Rated operational current, A	Circuit power factor, cosφ	Rated operating voltage, V	Rated operational current, A	Circuit time constant, ms
48	5	0,7	24	5	15
110	4,5		110	1,3	
230	3		220	0,5	
400	2				

Auxiliary contacts for automatic shutdown alarm (ACA)

Auxiliary contacts of automatic trip signaling are intended for indication of circuit breaker tripping under the influence of releases (maximum, HP, UVR, ZVR), as well as the TEST button.

Rated operating current up to 2 A at voltages up to 400 V AC with a frequency of 50-60 Hz and 220 V DC.

Electromagnetic drive (ED)

Electromechanical device for remote operation of a circuit breaker. The electromagnetic drive allows manual switching on and off. The electromagnetic drive can be used in automation circuits, where the switch is an executive mechanism of any protection system (device for automatic input of backup power ATS, etc.). The electromagnetic drive on the BA57-35 and BA57-39 switches is installed only at the factory.
Except BA57-31.

Electromagnetic drive characteristics

Current type	Rated voltage of the control circuit, (Ue), V	Maximum power consumption of the drive, V A	Operating voltage range, V
Alternating current with a frequency of 50 and 60 Hz	230, 400	1000	0,85-1,1

Optional accessories

BA57-31

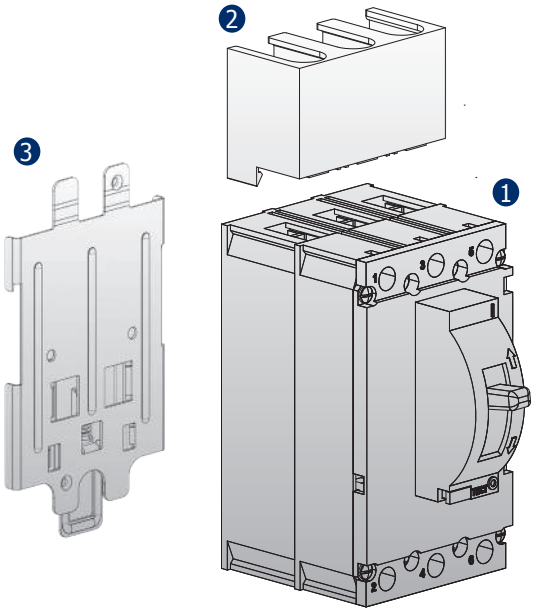

1 - circuit breaker;
2 - terminal cover;
3 - DIN-rail adapter.

BA57-35

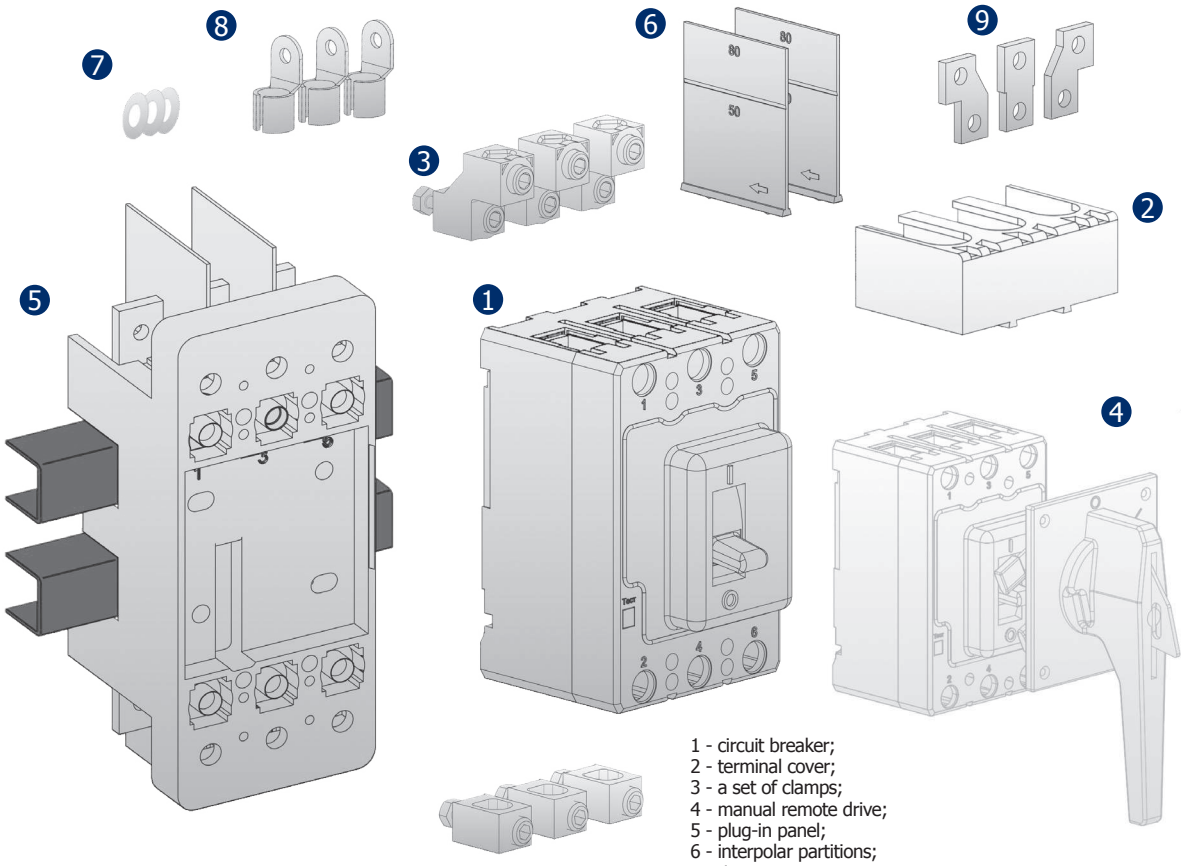

1 - circuit breaker;
2 - terminal cover;
3 - a set of clamps;
4 - manual remote drive;
5 - plug-in panel;
6 - interpolar partitions;
7 - disc spring;
8 - set of cable lugs;
9 - set of expansion terminals.

BA57-39

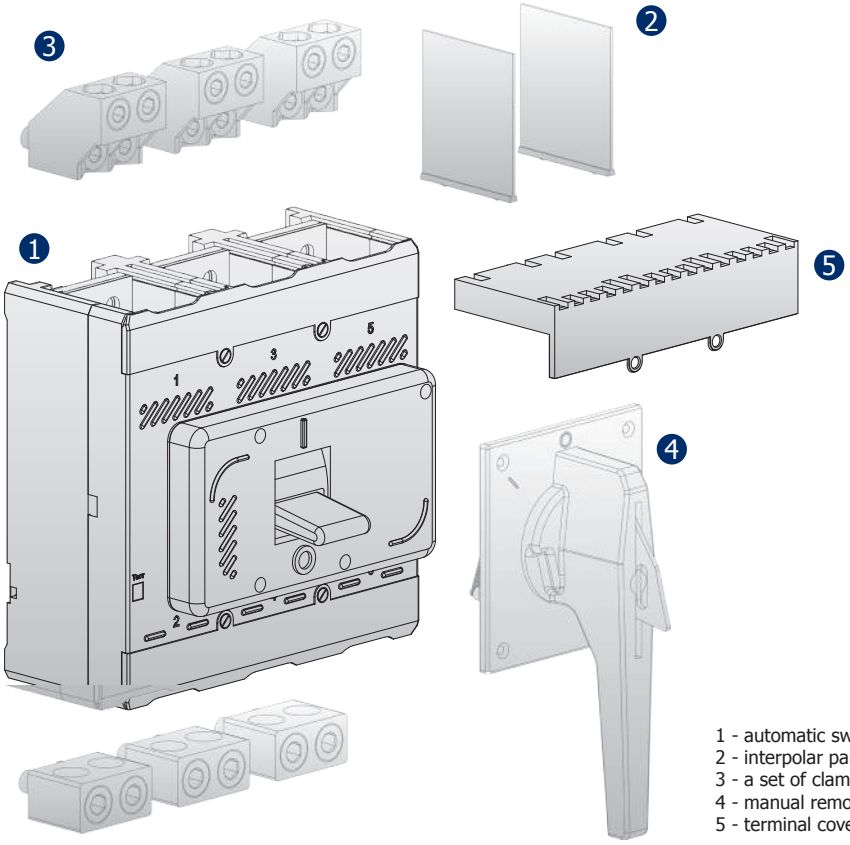

1 - automatic switch;
2 - interpolar partitions;
3 - a set of clamps;
4 - manual remote drive;
5 - terminal cover.

Adapter for DIN-rail BA57-31

Designed for mounting the circuit breaker on a DIN-rail.

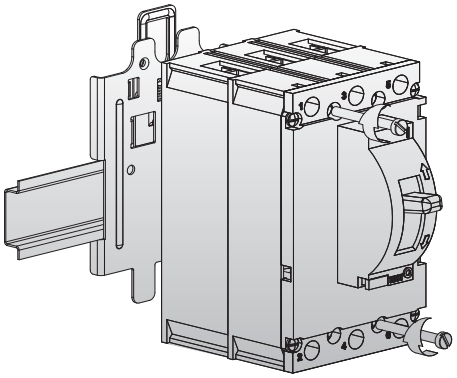

Terminal cover BA57-31 and BA57-35

Designed to protect against touching live parts, increases the IP protection degree.

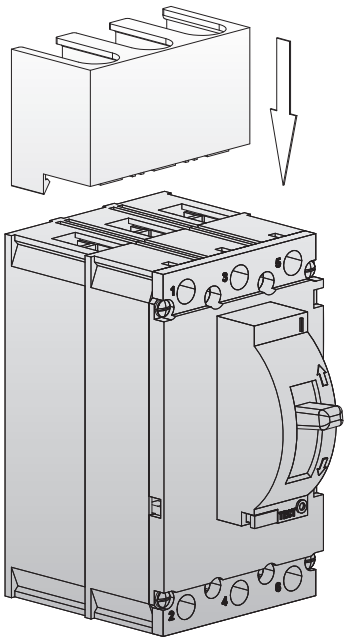

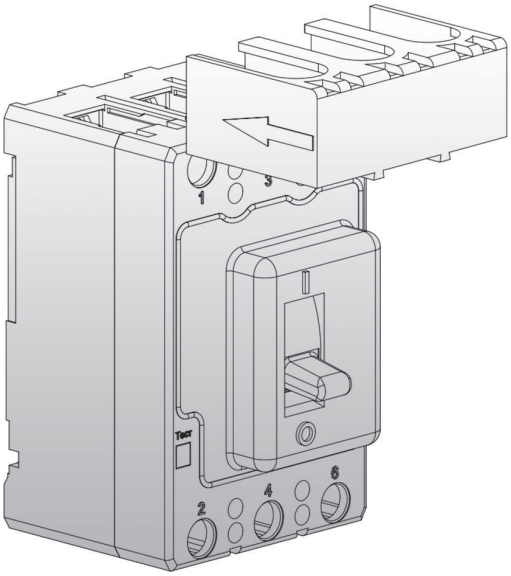

Set of expansion leads BA57-35

Designed to increase the pole-to-pole distance.

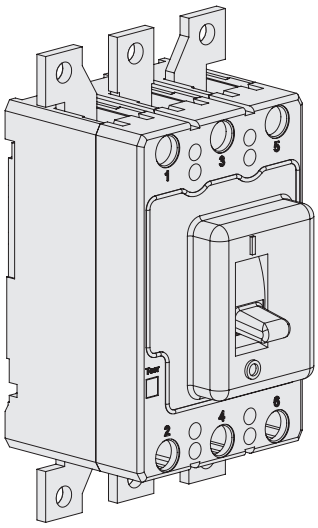

Plug-in panel for BA57-35

The plug-in panel is used only in conjunction with plug-in switches.

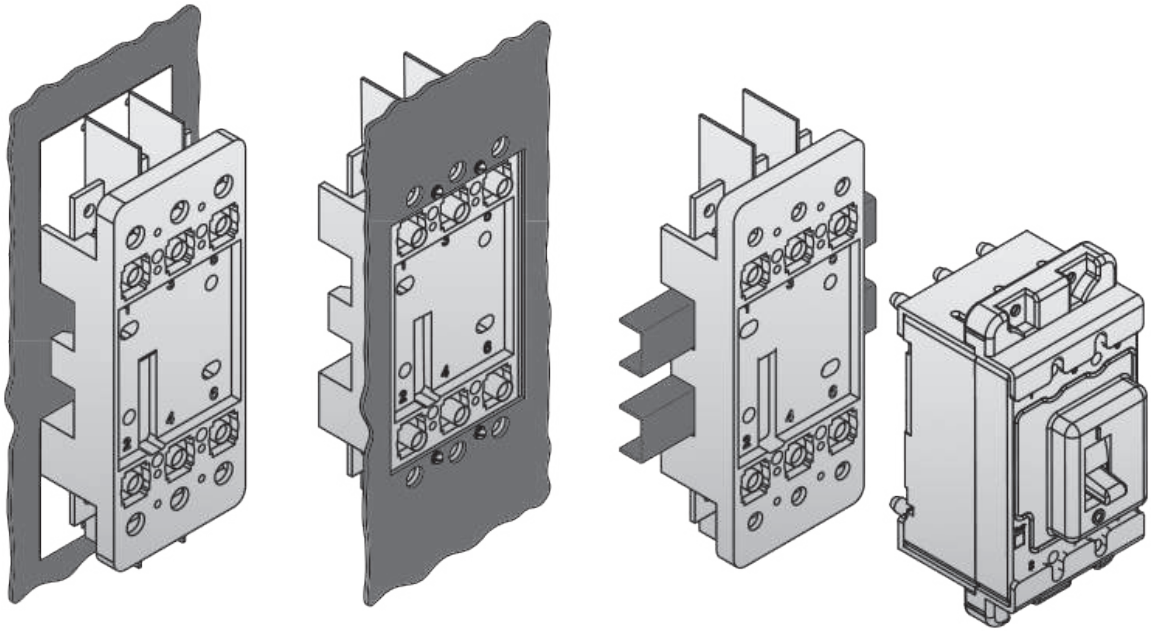

Interpole partitions BA57-35 and BA57-39

Designed to provide more reliable isolation between phases. Installed by the consumer independently. Can be used in conjunction with clamp sets.

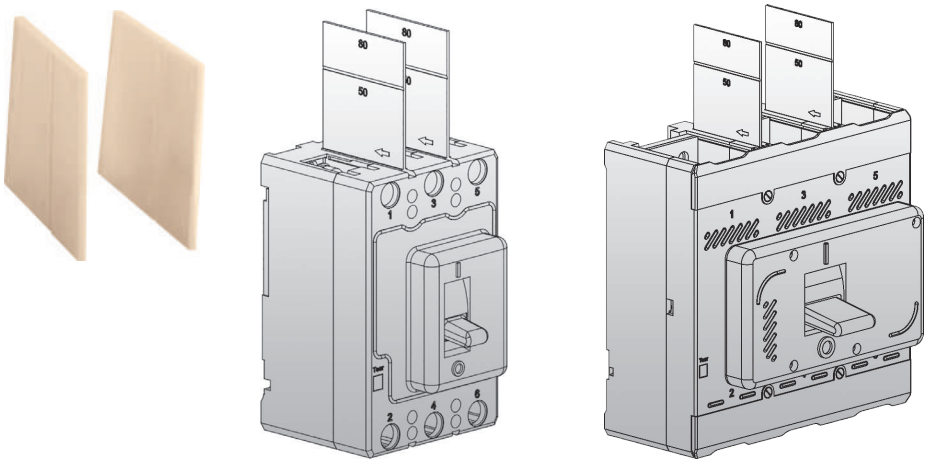

Set of adapter rails BA57-39

Enables the connection of busbars and conductors with cable lugs with a larger cross section to the circuit breaker.

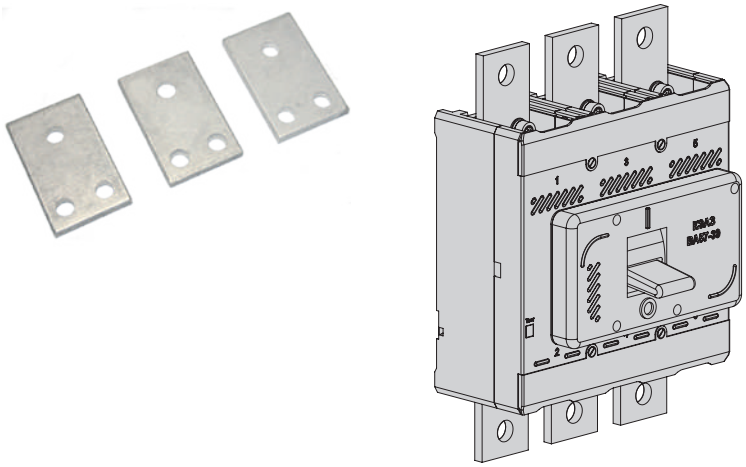

Set of leads for rear connection BA57-39

Enables rear connection to a bus and conductor circuit breaker with cable lugs.

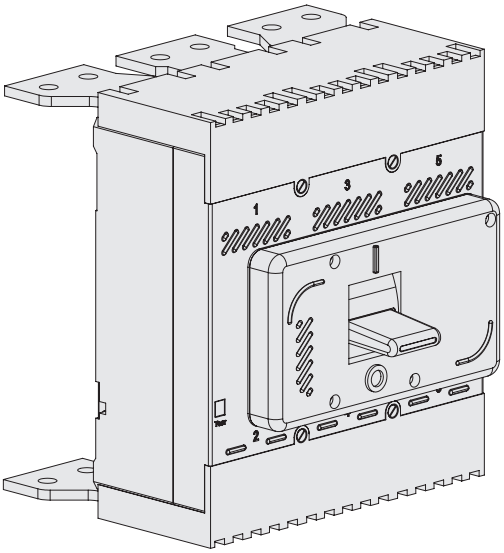

Manual remote actuator BA57-35, BA57-39

The device, fixed on the switchgear door, is designed to operate the circuit breaker through the door. The remote actuator is equipped with a locking device in the «off» position.

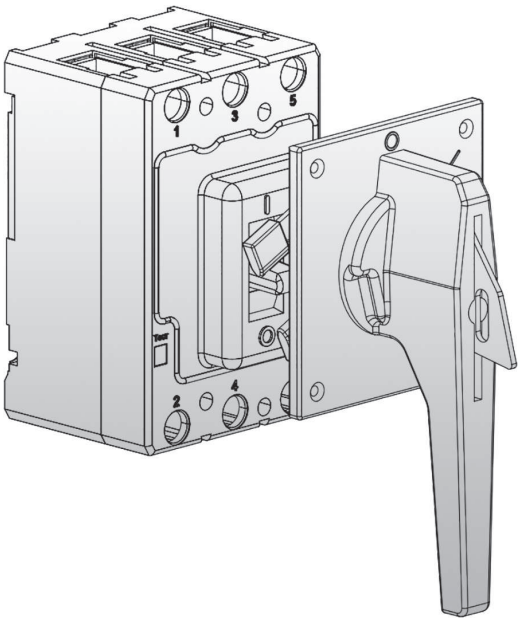

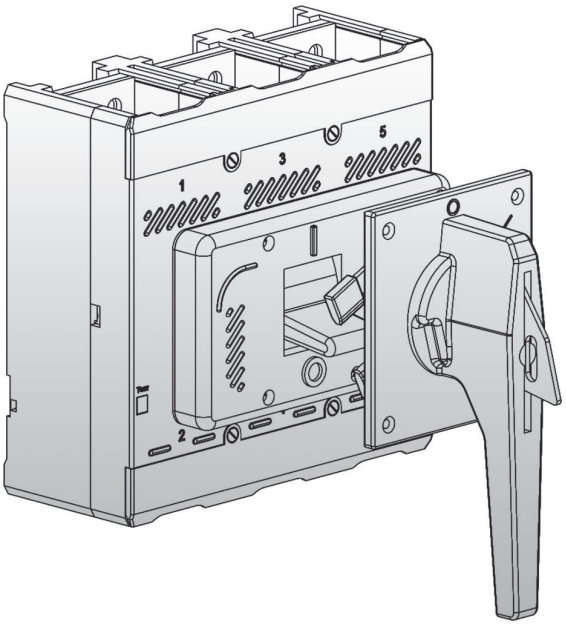

References for ordering additional accessories

Name	Article
Adapter for DIN-rail BA57-31-UHL3-KEAZ	110350
Terminal cover BA57-31-UHL3-KEAZ	110426
Terminal cover BA57-35/BA04-36/BA51-35-UHL3-KEAZ	110427
Terminal cover BA57-39/BA51-39-UHL3-KEAZ	261522
Terminal cover for front connection BA57-39/BA51-39-UHL3	274931
Set of expansion leads BA04-36/BA51-35/BA57-35- UHL3-KEAZ	110372
Set of adapter buses BA57-39-UHL3-KEAZ (number of busbars 3 pcs.)	225574
Set of leads for rear connection BA57-39-UHL3-KEAZ (number of leads 3 pcs.)	217455
Remote manual actuator RMA-BA04-36/BA51-35/BA57-35/BA57-39-UHL3-KEAZ	110450
Plug-in panel BA57-35-UHL3	256533
A set for a switch for installation on a plug-in panel BA57-35-UHL3-KEAZ	266919
Insulating screens for plug-in panel BA57-35	256218
Plug for secondary circuits MSTB-2.5/13-OptiMat/BA57-UHL3	273632
Socket for secondary circuits UMSTBVK-2.5/13-OptiMat/BA57-UHL3	273633

Clamp kit

BA57-35, BA57Ф35

Ways to connect conductors At the intersection of columns and lines with the selected options for connecting conductors, terminal numbers are given to indicate in the order for the circuit breaker and article numbers for ordering clamps separately				Ways of connecting conductors to the terminals of automatic switches 1, 3, 5								
				Front attachment							Rear attachment	
				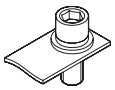 Busbar		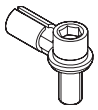 Conductors with cable lugs			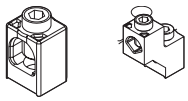 Conductors without cable lugs		 Busbar	
				Cu	Al	70 mm	95 mm	120 mm	185 mm	2x95 mm	Cu	Al/Cu
Ways of connecting conductors to the terminals of the circuit breaker 2, 4, 6	Front attachment	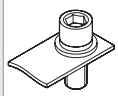	Cu	1 included					22/27 article 110394	8/10 article 110410	34	39
			Al		2 article 110392				23/28 article 110395	9/11 article 110411	35	40
		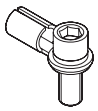	70 mm			3 article 110400			24/29 article 110396	16/19 article 110389	36	41
			95 mm				4 article 110403		25/30 article 110397	17/20 article 110390	37	42
			120 mm					5 article 110406	26/31 article 110398	18/21 article 110391	38	43
			185 mm	22/27 article 110394	23/28 article 110395	24/29 article 110396	25/30 article 110397	26/31 article 110398	6 article 110408	32/33 article 110401	44	45
			2x95 mm	8/10 article 110410	9/11 article 110411	16/19 article 110389	17/20 article 110390	18/21 article 110391	32/33 article 110401	7 article 110409	46	47
	Rear connection		Cu	34	35	36	37	38	44	46	12 article 110383	
			Al/Cu	35/39	40	41	42	43	45	47		13 article 110385

Withdrawable design
Designed for quick replacement of a circuit breaker and ensuring visible rupture of live parts. The withdrawable version is equipped with interlocks to prevent an attempt to replace the circuit breaker without putting it in the "Off" position.
Clamp sets for withdrawable circuit breakers with M8 bolts:

- № 14 - for connection with copper buses (included in the circuit breaker);
- № 15 - for connection with aluminum busbars (supplied by separate order).

Connection options:

- copper and aluminum wires - max section 185 mm²;
- cables - max. section 185 mm²;
- busbars - max. section 4x30 mm² or 6x20 mm²;
- tips - max. diameter 17,5 mm².

Clamp for connecting cables up to 185 mm²

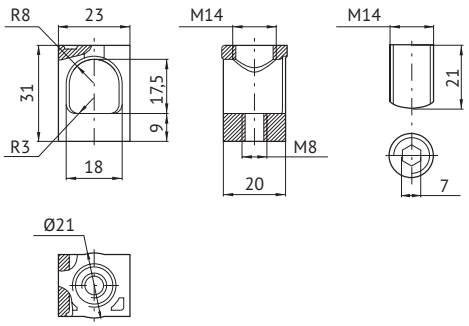

Clamp for connecting two cables up to 95 mm²

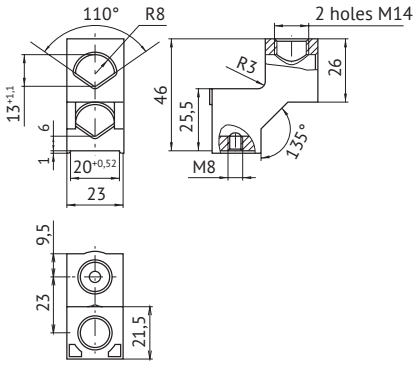

BA57-39

Ways to connect conductors At the intersection of columns and rows with the selected options for connecting conductors, the terminal numbers are given to indicate in the order for the circuit breaker and the article numbers for ordering the terminals separately			Ways of connecting conductors to the terminals of the circuit breaker 1, 3, 5			
			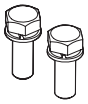 Bus or two cables with cable lugs		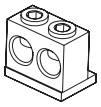 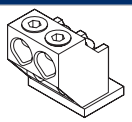 Conductors without cable lugs	
			Cu	Al	2x185, Cu/Al	4x120, Cu/Al
Ways of connecting conductors to the terminals of the circuit breaker 2, 4, 6	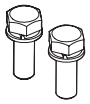	Cu	3 included	15 article 110388	9/11 article 110412	5/7 article 110405
		Al	15 article 110388	4 article 110404	10/12 article 110382	6/8 article 110407
	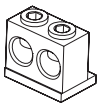	2x185, Cu/Al	9/11 article 110412	10/12 article 110382	1 article 110381	13/14 article 110384
	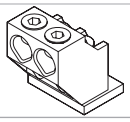	4x120, Cu/Al	5/7 article 110405	6/8 article 110407	13/14 article 110384	2 article 110393

Withdrawable design
Designed for quick replacement of a circuit breaker and ensuring visible rupture of live parts. The withdrawable version is equipped with interlocks to prevent an attempt to replace the circuit breaker without putting it in the «Off» position.

Connection options:
- copper and aluminum conductors - max. section 2x185 mm² or 4x120 mm²;
- cables - max. section 2x185 mm² or 4x120 mm²;
- busbars - max. section 12x50 mm².

Clamp for front connection of two cables up to 185 mm²

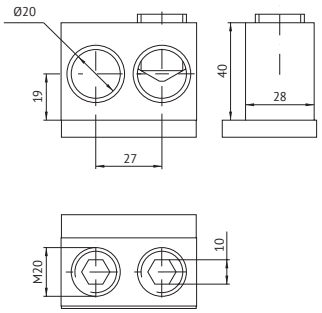

Clamp for front connection of four cables up to 120 mm²

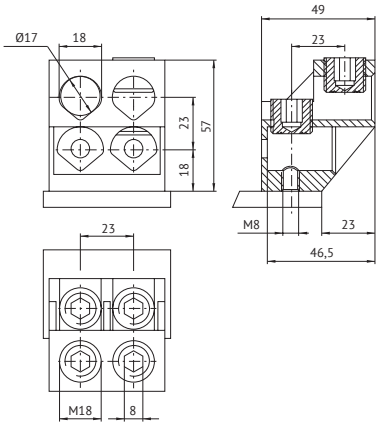

Installation of the plug-in panel BA57-35

Connecting leads

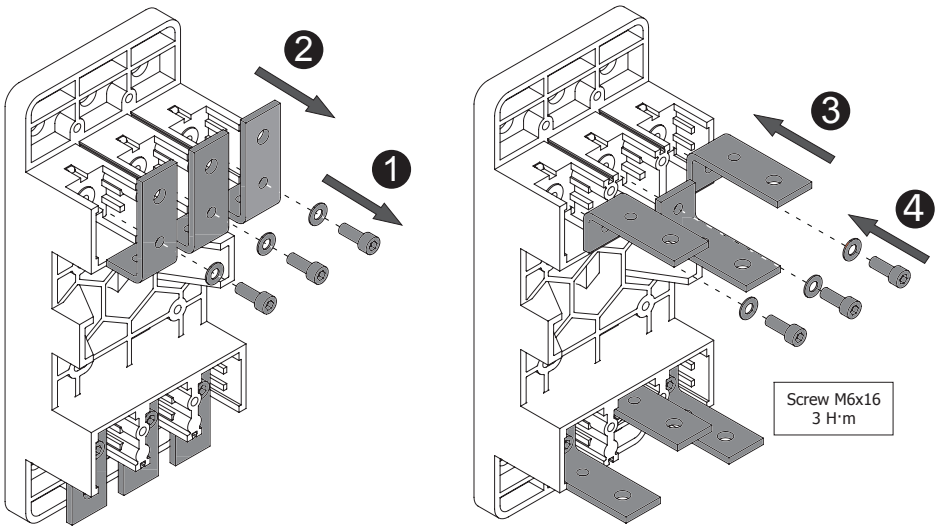

Hole locations for base installation

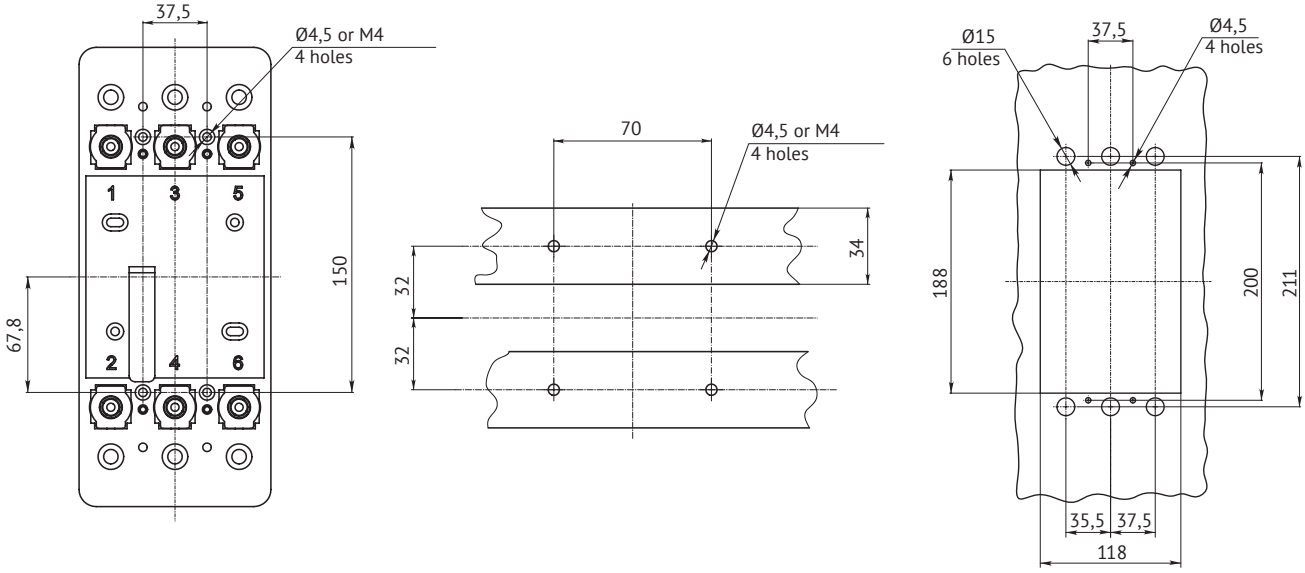

Installing the base

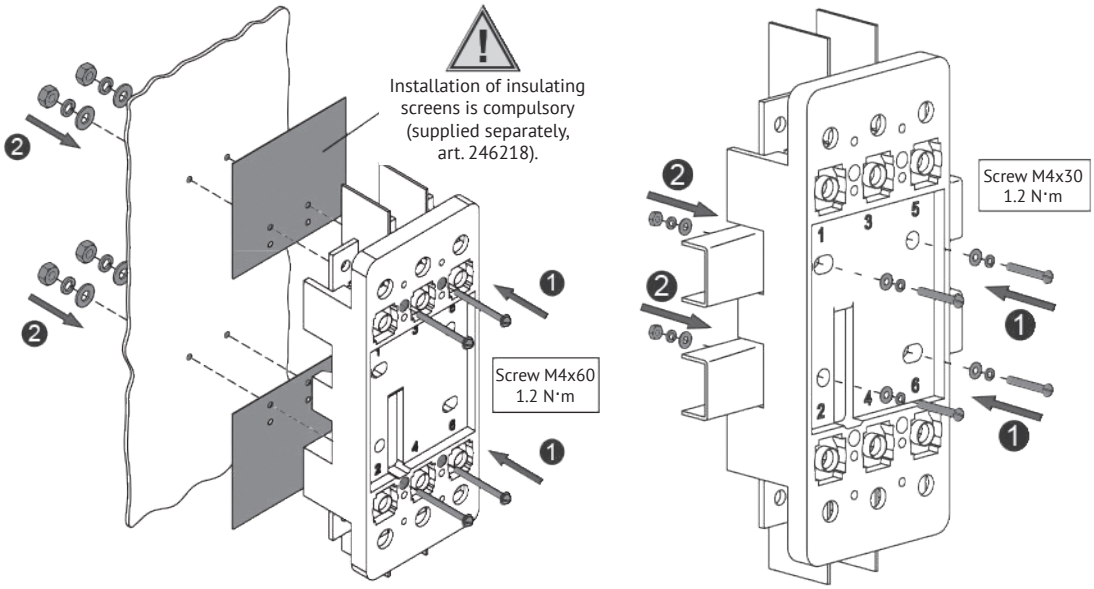

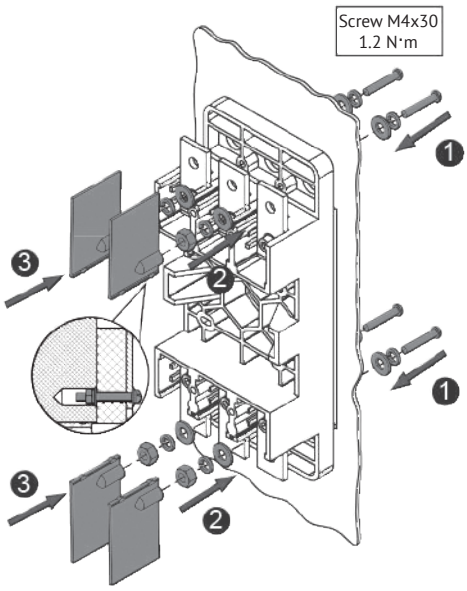

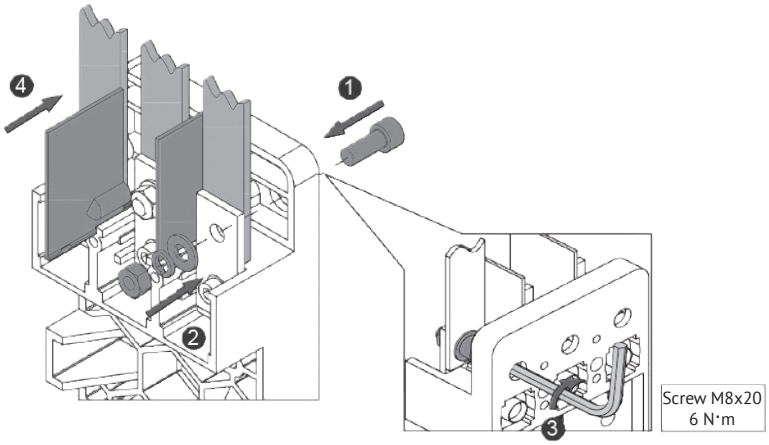

Switch mounting

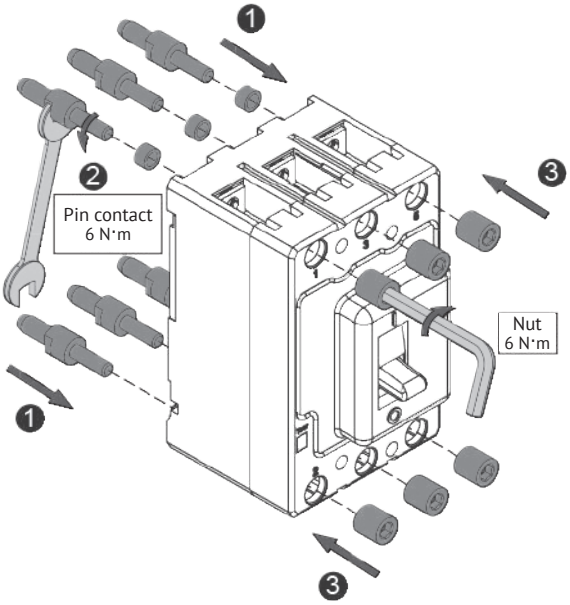

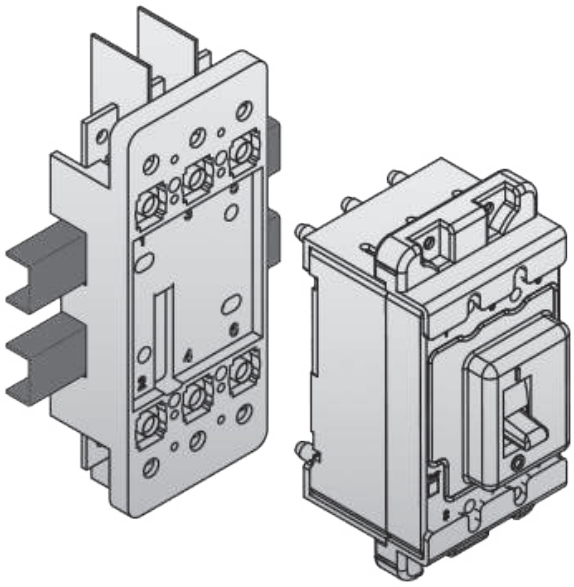

The plug-in panel BA57-35- UHL3 - KEAZ (for currents 63 ÷ 250 A) includes sets of mounting parts 1, 2 and 3.
The «Kit for the switch for installation on the BA57-35- UHL3-KEAZ plug-in panel» includes kits of mounting parts 2 and 3 (see «Instructions for mounting the panel of plug-in circuit breaker BA57-35 ГЖИК.305636.223ИМ»).
If it is necessary to quickly replace the circuit breaker, it is recommended to use an additional circuit breaker (plug-in, without a panel) with the parts from the «Kit for a circuit-breaker for installation on a plug-in panel» installed on it.

Connection of external conductors to the main circuit of the switch

ВА57-31

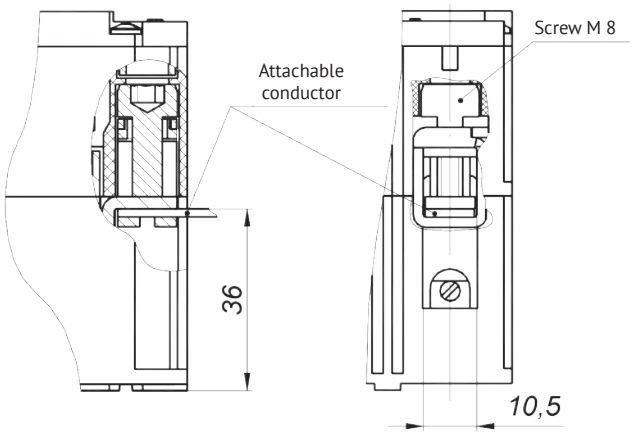

Shape and size of the busbar to be connected

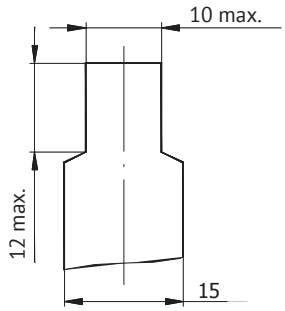

The clamps allow the connection of copper and aluminum conductors with a cross section of 2,5 to 50 mm²

ВА57-35, ВА57Ф35

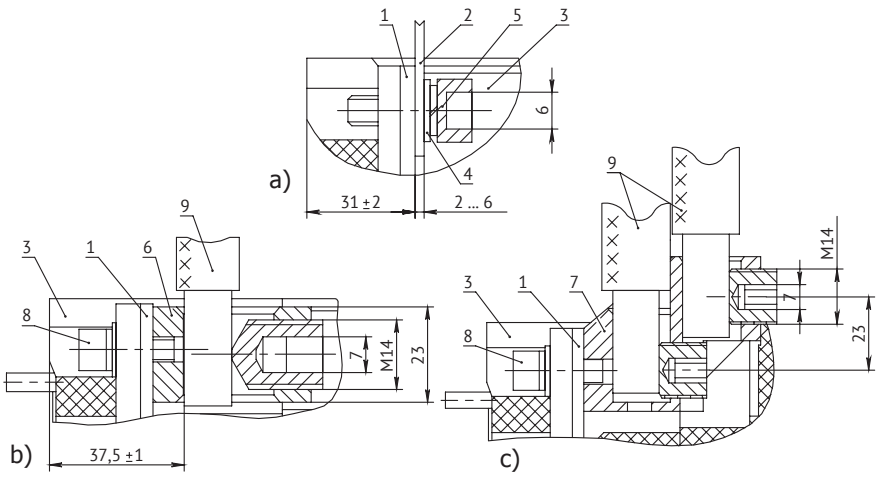

Shape and size of the busbar to be connected

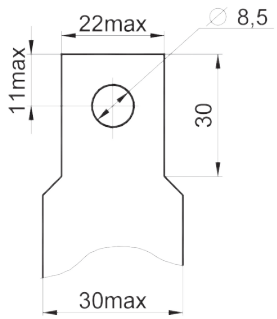

a) connection by busbars or cores of cable with cable lug;
b) connection with one 185 mm² cable without a cable lug;
c) connection with two 95 mm² cables without cable lug.

1 - output of the circuit breaker;
2 - bus (or cable lug);
3 - automatic switch;
4 - washers;
5 - screw M8;
6 - single-cavity clamp;
7 - two-socket clamp;
8 - bolt M8;
9 - connected conductor.

BA57-39

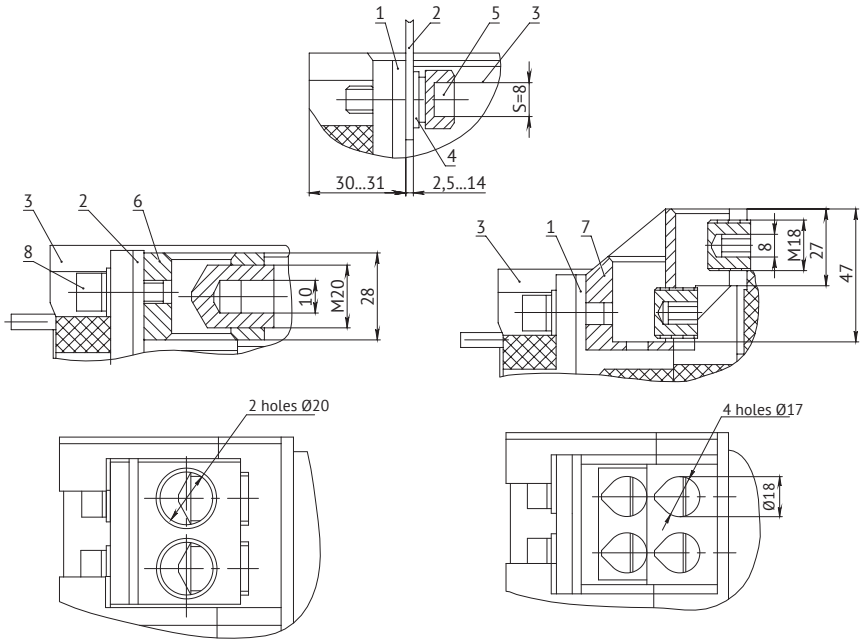

Shape and size of the busbar to be connected

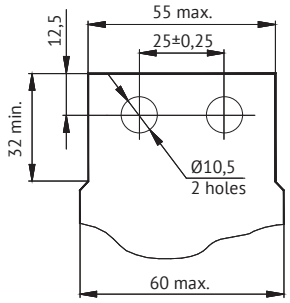

a) connection by busbars or conductors of a cable with a cable lug;
b) connection with two cables with a cross-section of 185 mm^2 without a cable lug;
c) connection with four cables with a cross-section of 120 mm^2 without a cable lug.

1 - output of the circuit breaker;
2 - busbar;
3 - automatic switch;
4 - washer;
5 - bolt M10x30 ГОСТ 7796;
6 - two-socket clamp;
7 - four-way clamp.

Overall, installation and connection dimensions

BA57-31

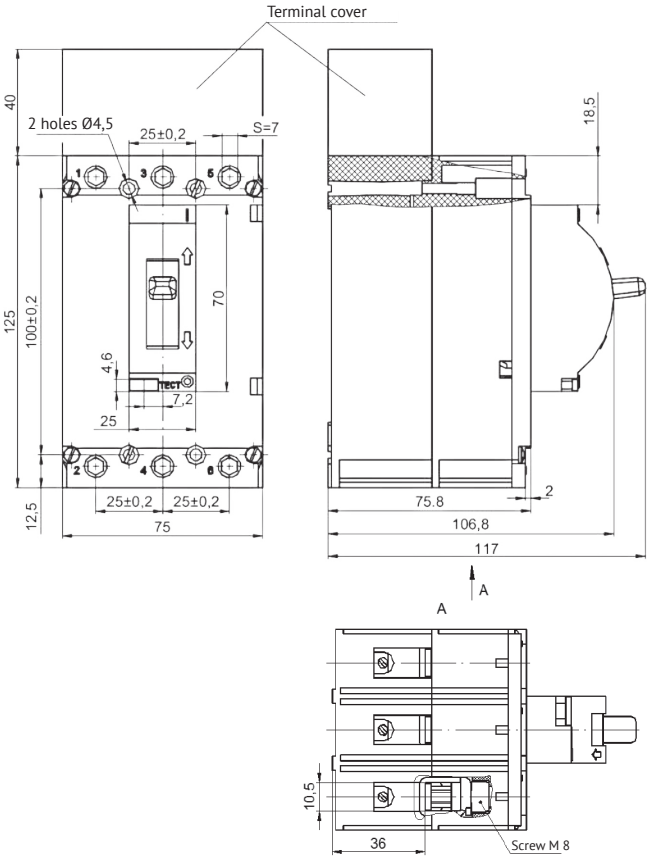

Location of wires coming out of the circuit breaker from additional assembly units

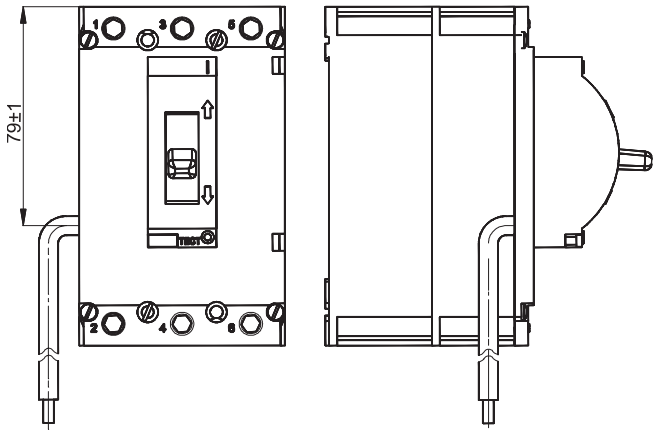

A terminal cover installed on the side of terminals 1, 3, 5 is supplied complete with the BA57-31 circuit breaker. Terminal covers can be ordered separately.

BA57-35, BA57Ф35

With clamps for front attachment

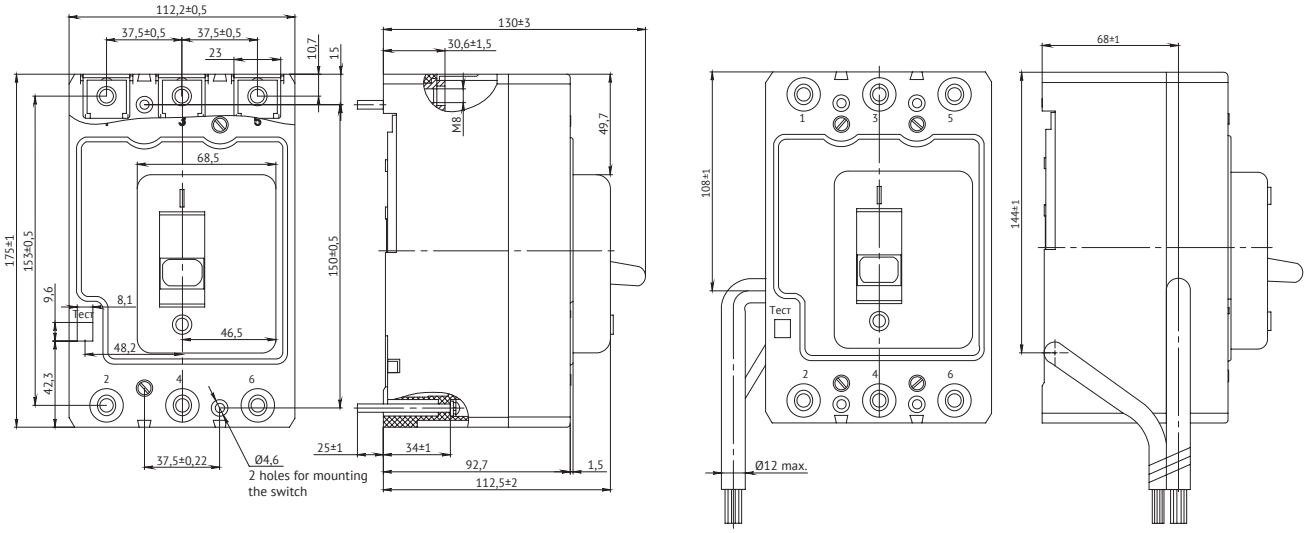

Electromagnetic drive

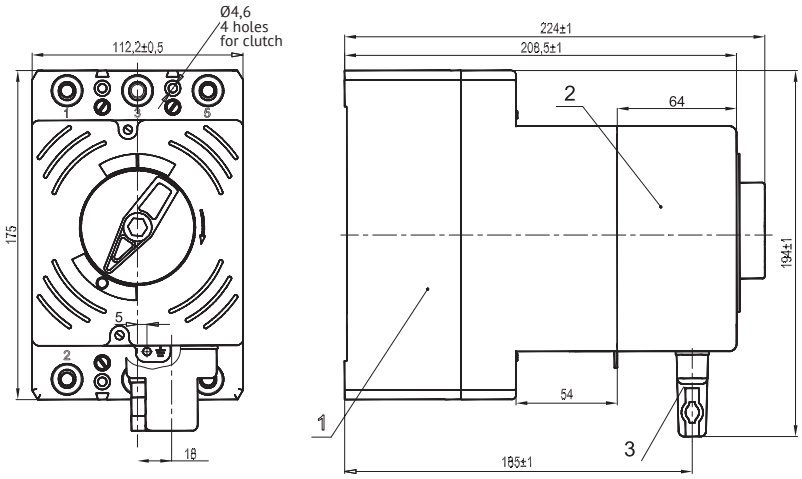

1 - circuit breaker;
2 - electromagnetic drive;
3 - connector of РП10 type.

Withdrawable version with manual remote control

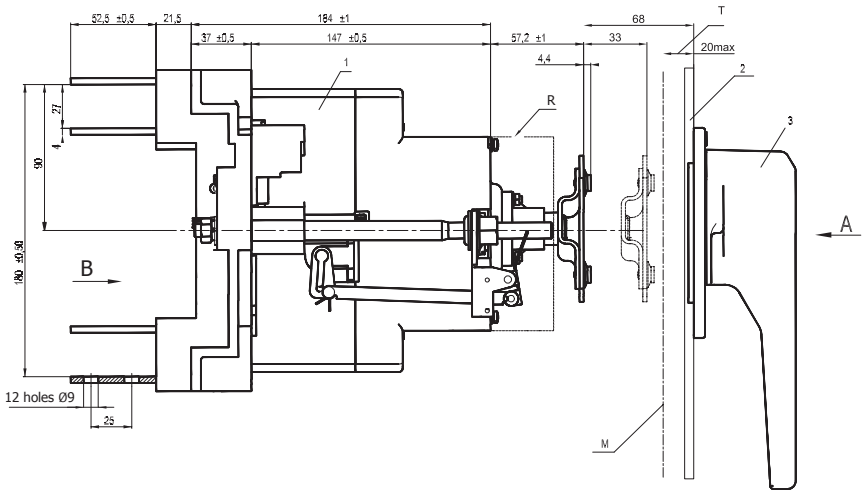

1 - switch;
2 - switchgear door;
3 - manual remote drive;
4 - РП10 type connector;
5 - blocking;
6 - electromagnetic drive;
K - horizontal axis of the circuit breaker;
L - horizontal axis of the manual remote drive;
M - axis of rotation of the switchgear door;
H - vertical axis of the switch;
P - vertical axis of the manual drive;
R - «control» position of the switch;
C and T - dimensions that define the axis rotation.

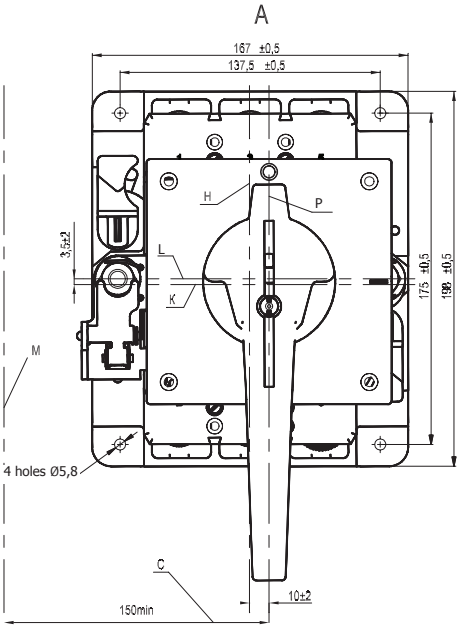

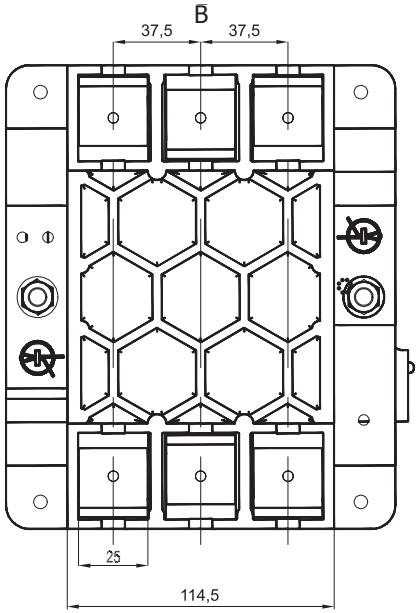

Plug-in switch

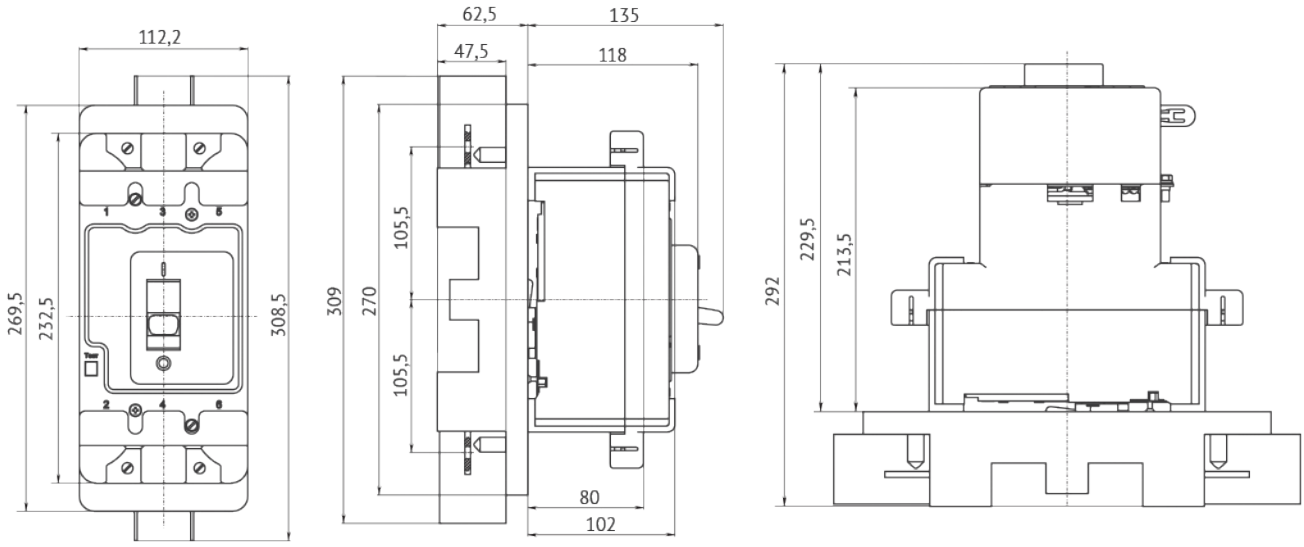

Switches with rear connection terminals

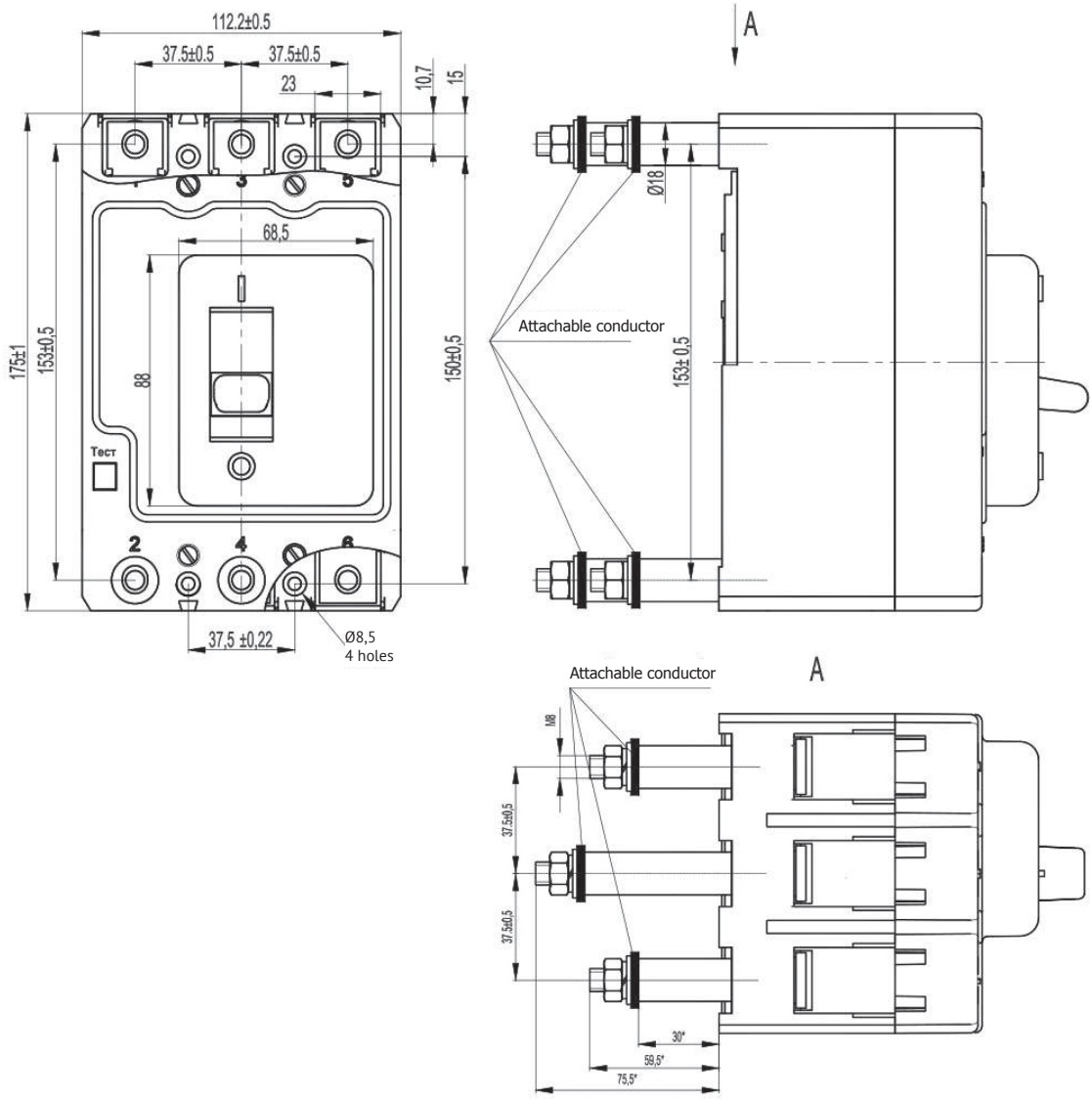

ВА57-39

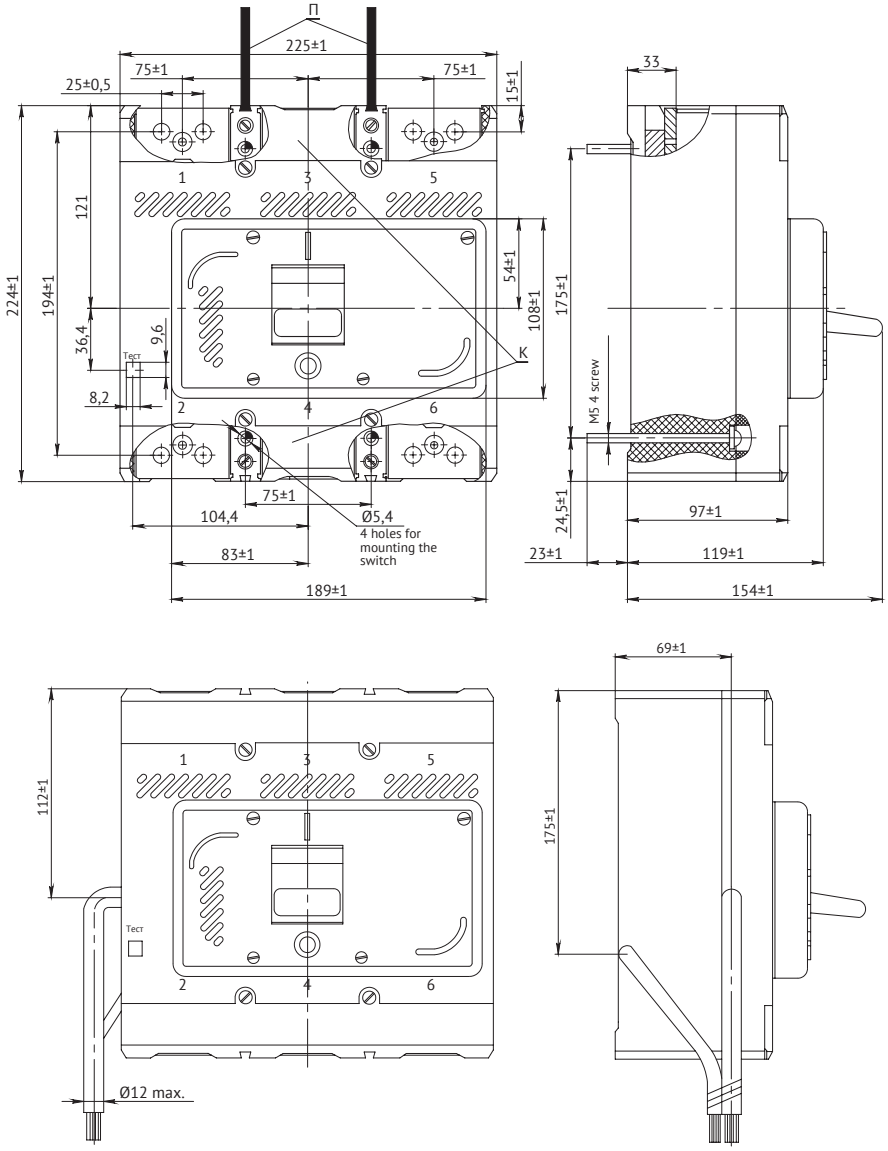

Fixed design with electromagnetic drive

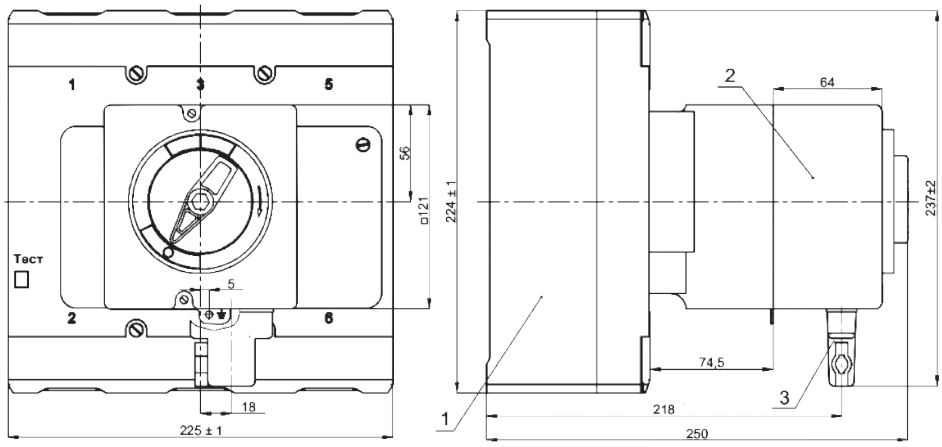

1 - automatic switch;
2 - electromagnetic drive;
3 - РП10 type connector;
K - vertical axis of the switch;
L - horizontal axis of the electromagnetic drive.

Drawer BA57-39 circuit breaker with manual remote drive

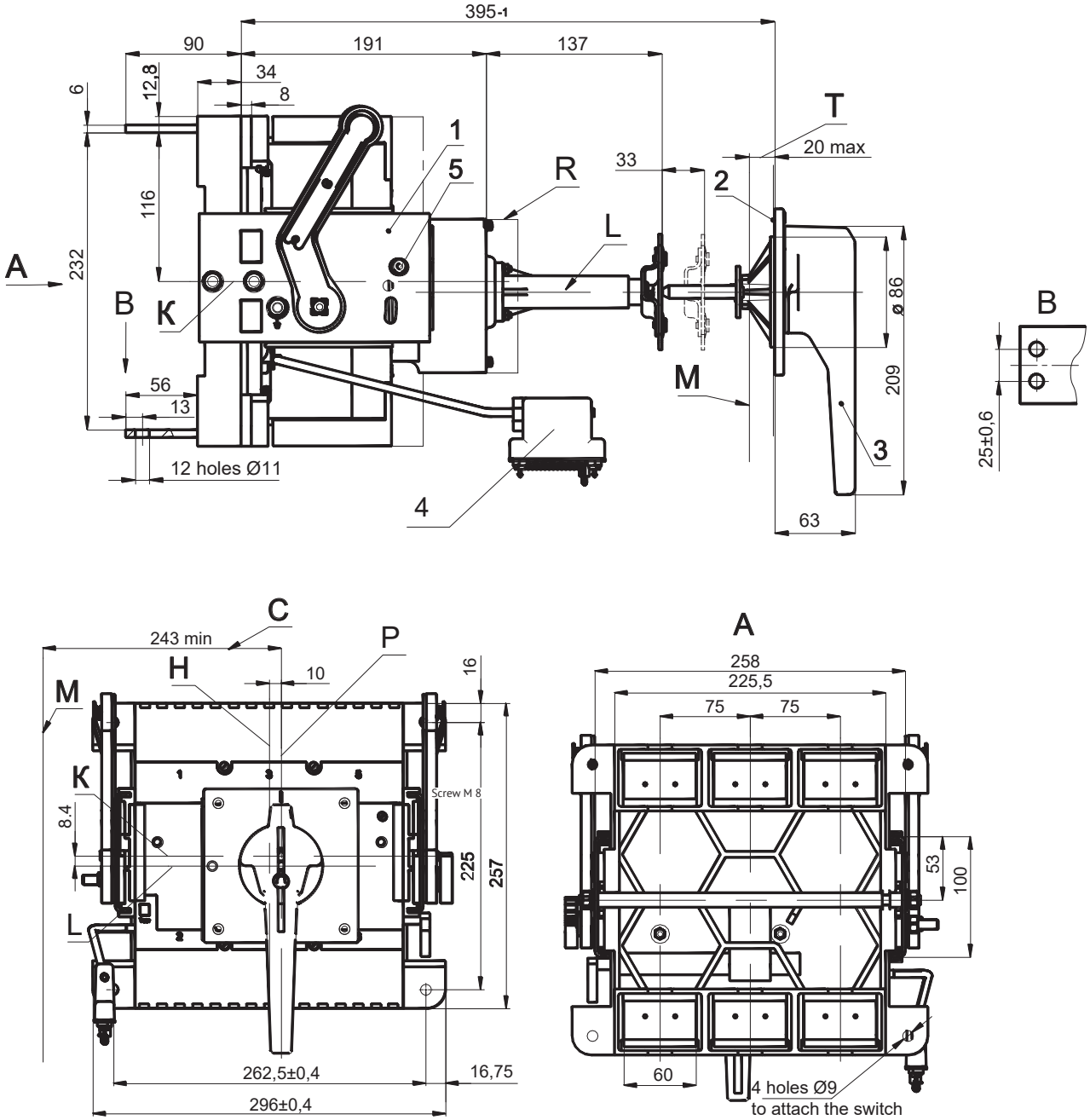

Circuit breaker BA57-39 withdrawable version with electromagnetic drive

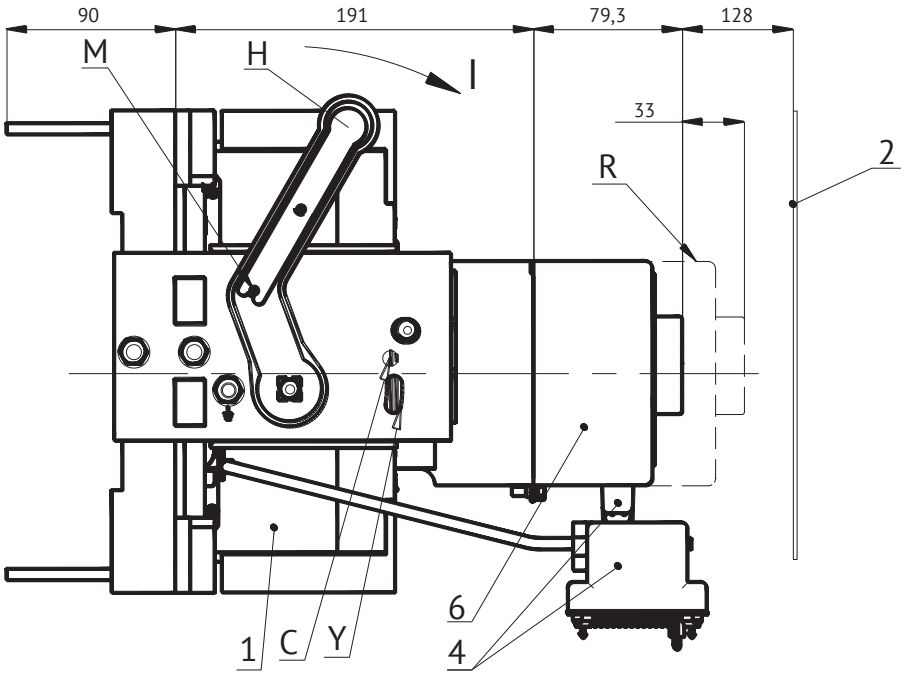

Drawer type automatic circuit breaker VA57-39 with manual drive

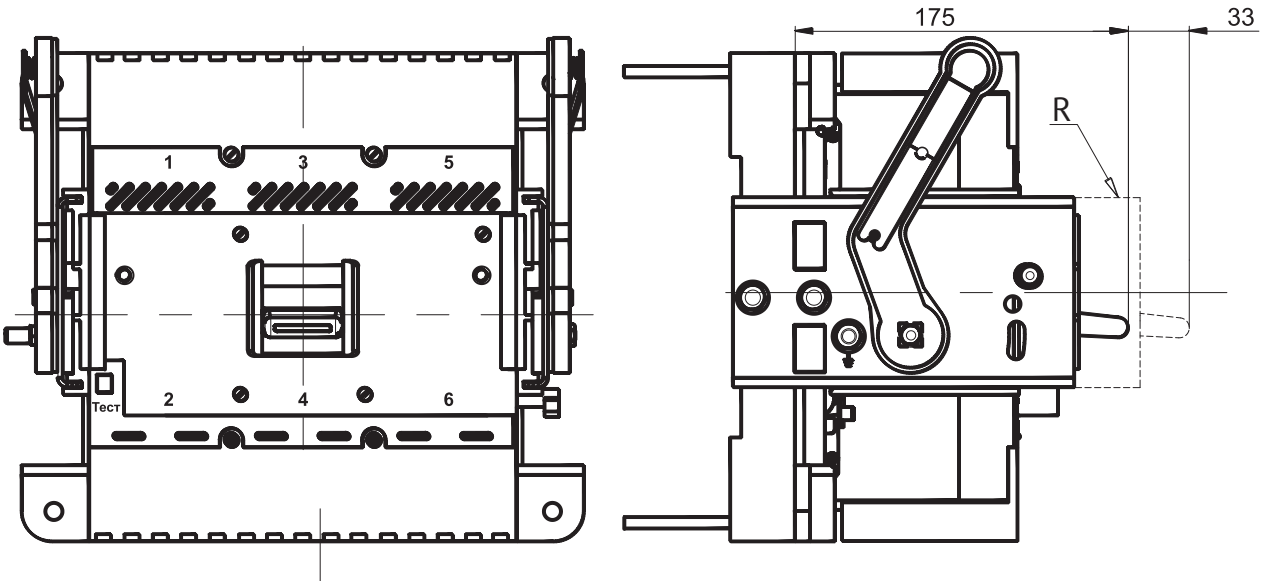

1 - circuit breaker;
2 - switchgear door;
3 - manual remote drive;
4 - connector of РП10 type;
5 - blocking;
6 - electromagnetic drive.

K - horizontal axis of the circuit breaker;
L - horizontal axis of the manual remote drive;
M - axis of rotation of the switchgear door;
H - vertical axis of the circuit breaker;
P - vertical axis of the manual drive;
R - control position of the circuit breaker;
C and T are dimensions that determine the axis of rotation of the switchgear door.

Minimum distances from the circuit breaker to metal parts

BA57-31

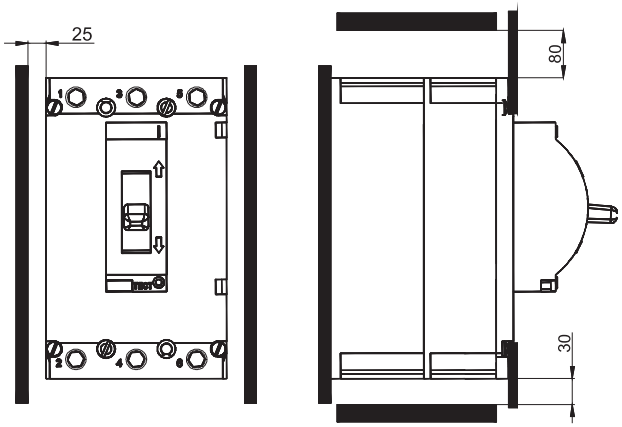

BA57-35, BA57Ф35

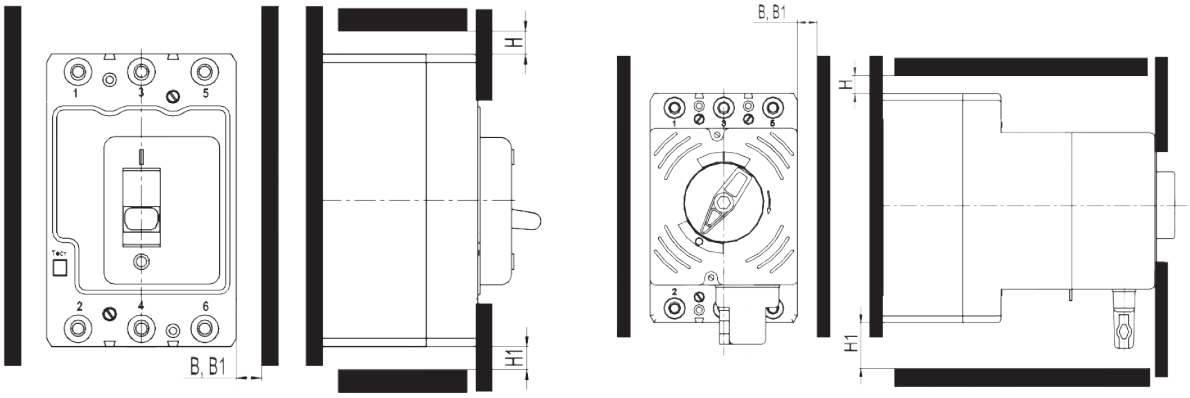

Rated voltage, V	Dimensions, mm			
	B	B1*	H	H1
400	20	40	40	20
690	40	40	80	20

**Size B1 - for withdrawable circuit breakers with manual remote or electromagnetic drive.*

BA57-39

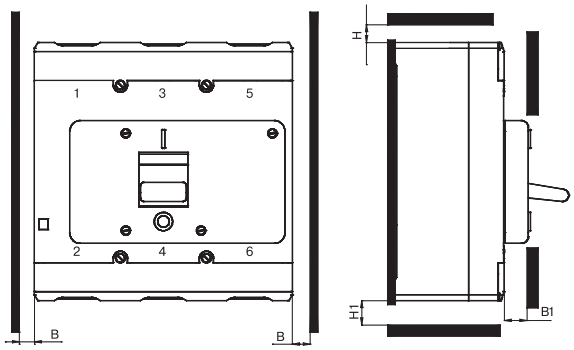

Rated voltage, V	Dimensions, mm			
	B	B1	H	H1
400	20	0; 15[1)]	40; 65[2)]	20; 45[3)]
690	40		80; 105[2)]	

[1)] - for automatic switches with a set of clamps No. 2, 5, 6, 7, 8, 13, 14;
[2)] - for automatic switches with clamps No. 2, 7, 8, 13;
[3)] - for circuit breakers with a set of clamps No. 2, 5, 6, 14.

Overall, mounting and connection dimensions of accessories for switches

Din-rail adapter BA57-31

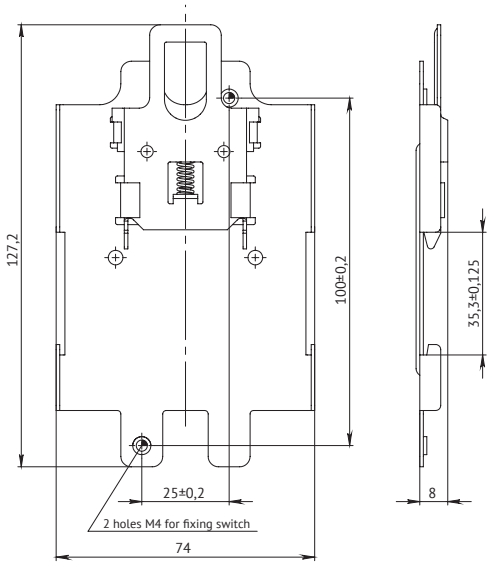

Terminal cover BA57-31

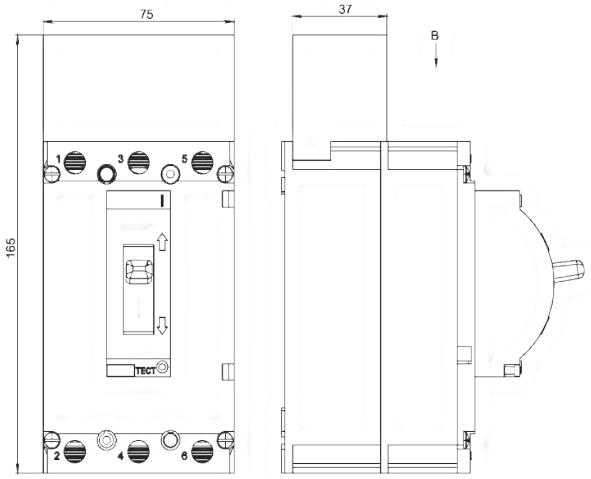

Terminal cover BA57-35

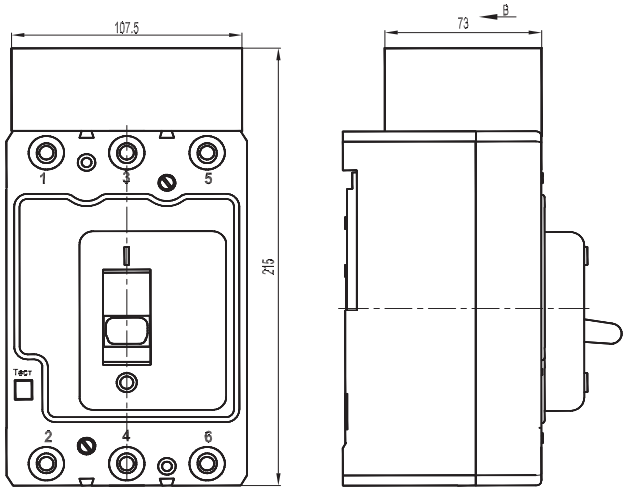

Pole partition BA57-35, BA57-39

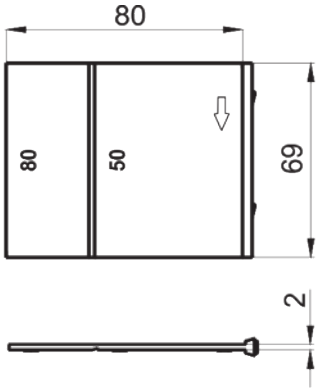

Manual remote control BA57-35

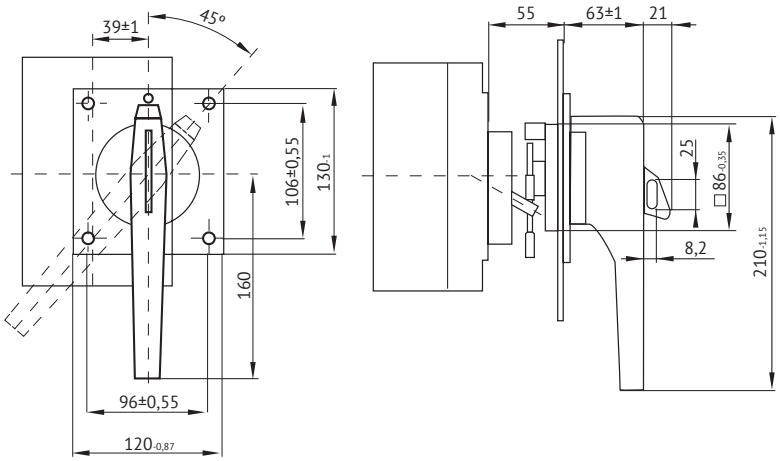

Manual remote actuator BA57-39

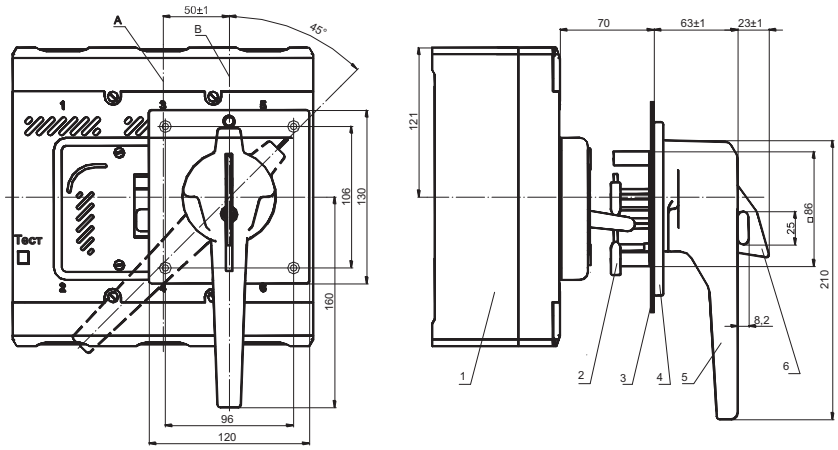

A - vertical axis of the circuit breaker;
B - vertical axis of the manual remote drive;
1 - automatic switch;
2 - drive leash;
3 - switchgear door;
4 - drive base;
5 - drive handle;
6 - locking device.

Set of expansion rails BA57-35

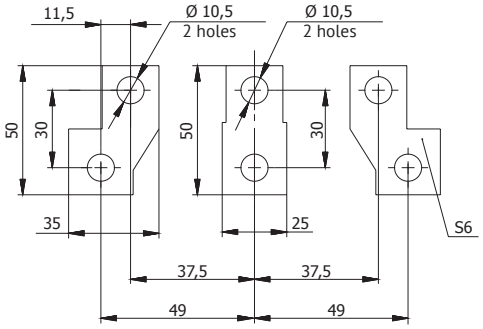

Set of adapter rails BA57-39 for rear connection

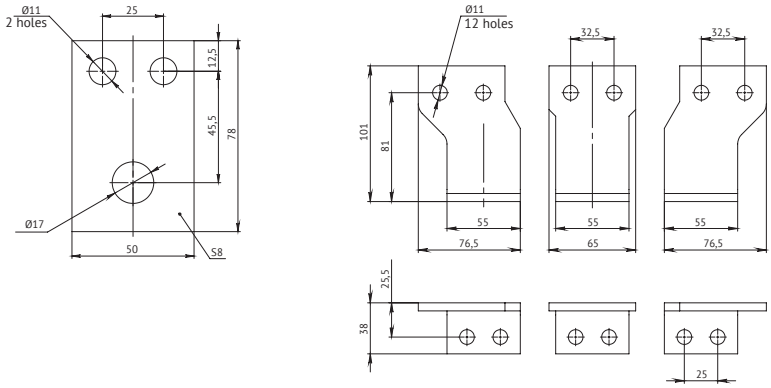

Plug-in panel BA57-35

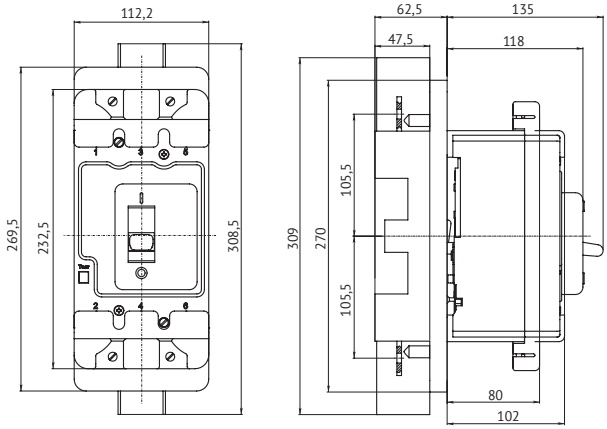

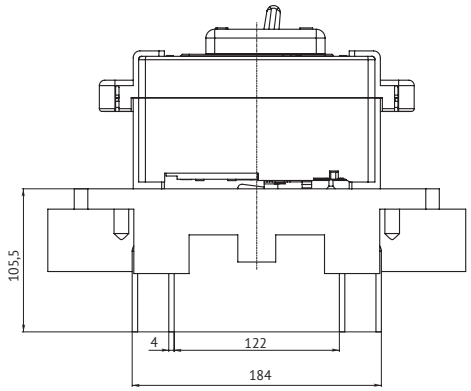

Time-current characteristics

BA57-31

16 A

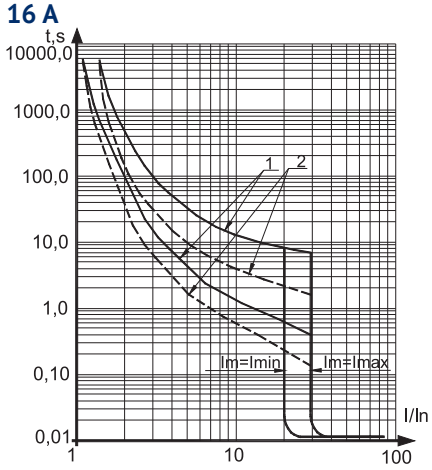

20 A, 25 A, 31,5 A, 40 A

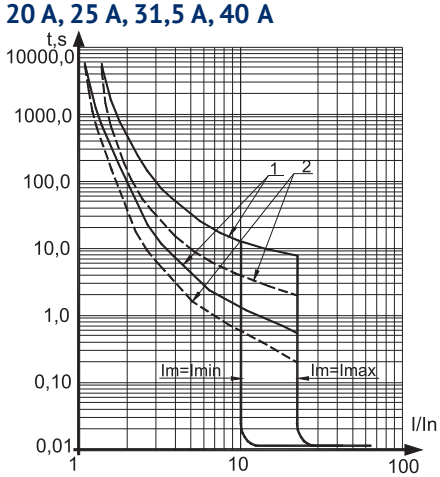

50 A, 63 A

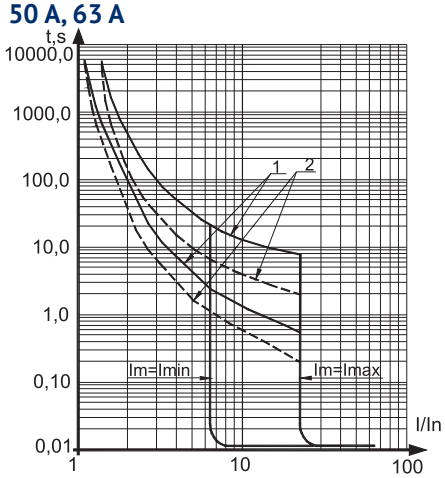

80 A, 100 A

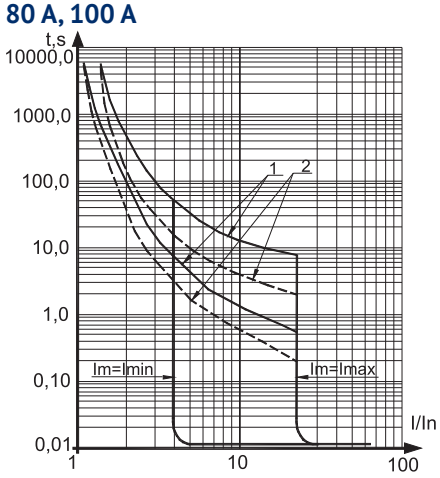

1 - operating zone of the thermal overcurrent release, removed from the cold state;
2 - operating area of the thermal overcurrent release, removed from the heated state;
Im is the setting of the electromagnetic release.

ВА57-35; ВА57Ф35

12,5; 16; 20; 25; 31,5; 40; 50 A

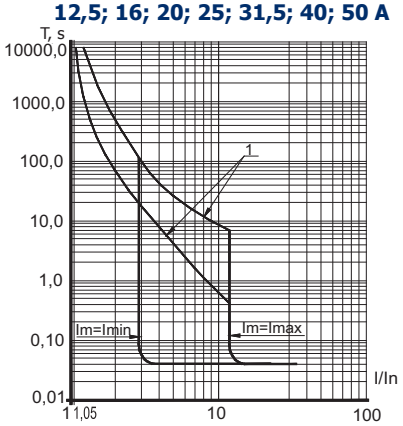

63 A

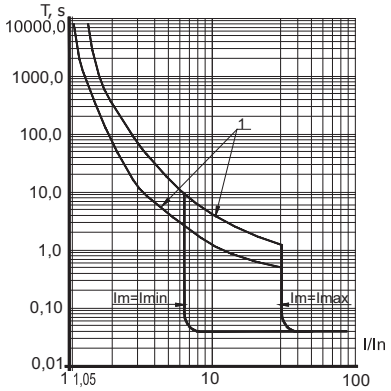

80 A

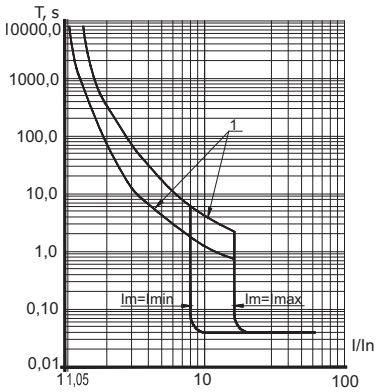

100 A

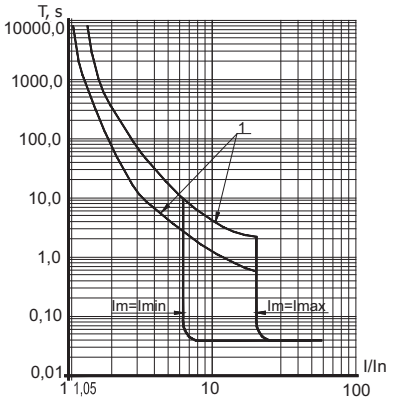

125 A

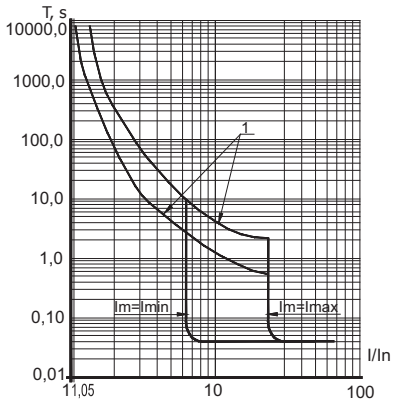

160, 200, 250 A

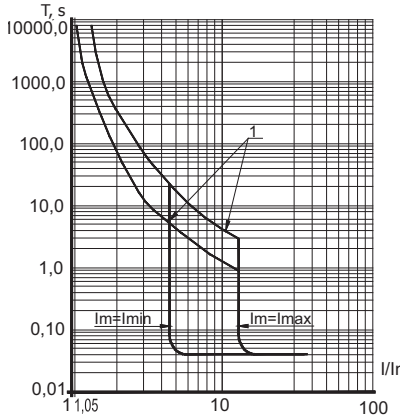

ВА57-39

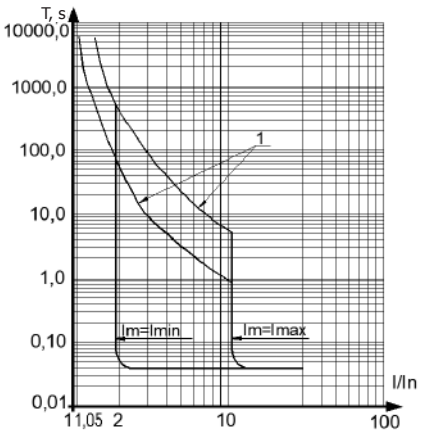

1 - operating zone of the thermal overcurrent release, removed from the cold state;
2 - operating area of the thermal overcurrent release, removed from the heated state;
Im - setting of the electromagnetic release;
t, s - response time;
I/In is a multiple of the rated current.

Dependence of the rated operating currents of BA57 thermal releases on the ambient temperature

For general purpose circuit breakers with RRR acceptance

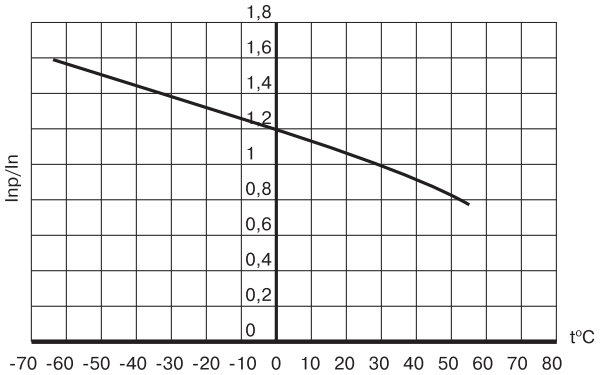

For switches with PC acceptance

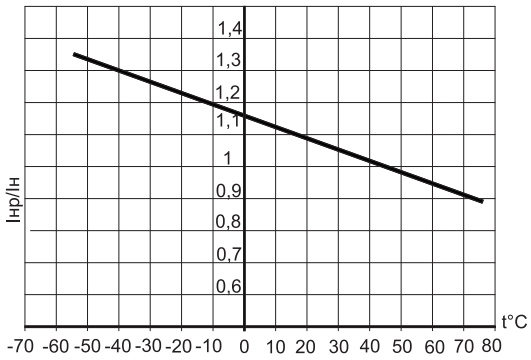

Ambient temperature, ° C	10-15	15-20	20-25	25-30	30-35	35-40
Inp/In	1,14	1,1	1,07	1,04	1	0,98

Basic electrical diagrams

Pin marking:
11-12; 31-32 - open contacts S2;
23-24; 43-44 - closing contacts S2;
51, 52, 53 - auxiliary alarm contacts for automatic shutdown;
C - D - K1 shunt release;
E - F - zero or undervoltage release KV1 or KV2.
Color marking of the wire is allowed according to the table:

Alphanumeric	Color	
	Designation	Wire color
C, D, E, F	C	Blue or light blue
11, 12	К	Red or pink
23, 24	Ж	Yellow or orange
31, 32	Б	White or colorless
43, 44	Ч	Black or purple
51	З	Green
52	Кч	Brown
53	Б	White

Pushbutton switch SB2 of the K1 shunt release can be with double or single open circuit. The installation of the electrical circuit, indicated in the figure by the dash-dot line, the installation of the SB2 pushbutton switch (not included in the delivery set) is carried out by the consumer.

Designations used in the diagrams:
A1-A4 - connector contacts;
K1 - shunt release;
Kp - red or pink wire;
KV - zero or minimum voltage release;
KV1 - zero voltage release;
KV2 - minimum voltage release;
S - contacts of the auxiliary circuit of the circuit breaker;
S1 - auxiliary contacts for automatic shutdown alarm;
S2 - auxiliary contacts;
SB1 - push-button switch of the electromagnetic drive;
SB2 - push-button switch of the shunt release;
SQ1, SQ2 - electromagnetic travel switches;
U1 - supply voltage of the shunt release;
U2 - supply voltage of the electromagnetic drive;
U3 - supply voltage of zero or undervoltage release;
VD - semiconductor diode;
X1 - connector of the electromagnetic drive;
X2 - connector for withdrawable circuit breaker;
YA - electromagnetic drive;
YA1, YA2 - electromagnets.

The diagrams with signaling contacts S1 are shown for the circuit breaker in the switching position «Automatically switched off».

Position of auxiliary and signal contacts

Contact		State «On»	State «Disabled automatically»	State «Manual shutdown»
BA57				
S1	51-52	open	closed	open
S1	63-52	closed	open	open
S2	11-12	open	closed	closed
S2	23-24	closed	open	open
S2	31-32	open	closed	closed
S2	43-44	closed	open	open

BA57-31, 35, 39; BA57Ф35

Three-pole AC circuit breakers

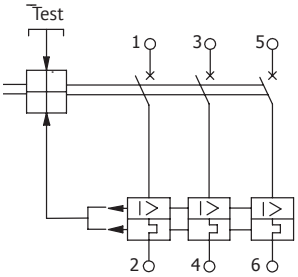

Three-pole AC circuit breakers with shunt release and auxiliary contacts (except for BA57F35)

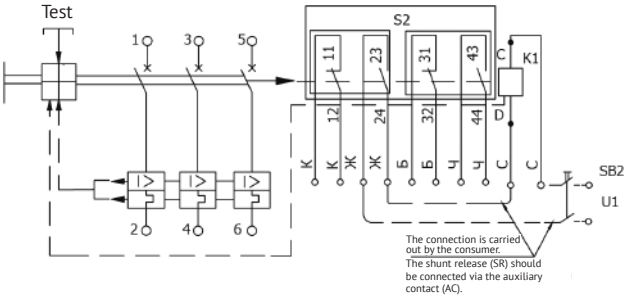

BA57-XXX-XX1210 (16)

AC circuit breakers of three-pole design with shunt release without auxiliary contacts

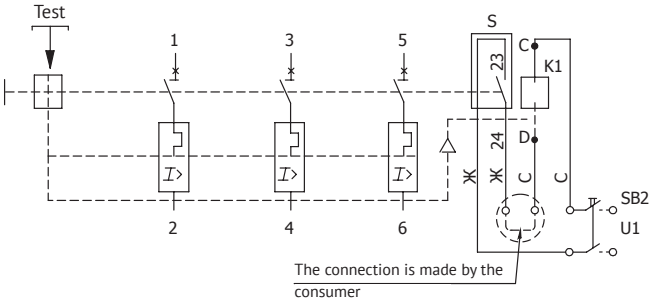

BA57-35, BA57-39

Miniature circuit breakers with undervoltage release or undervoltage release, automatic trip signaling auxiliary contacts and auxiliary contacts

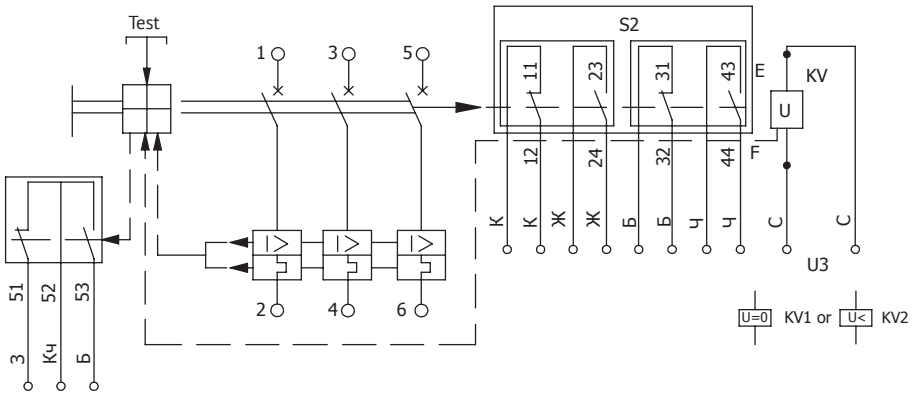

BA57-35-XX4730, BA57-39-XX4730

Schematic of fixed circuit breakers with electromagnetic drive, shunt release, automatic trip signaling auxiliary contacts and auxiliary contacts

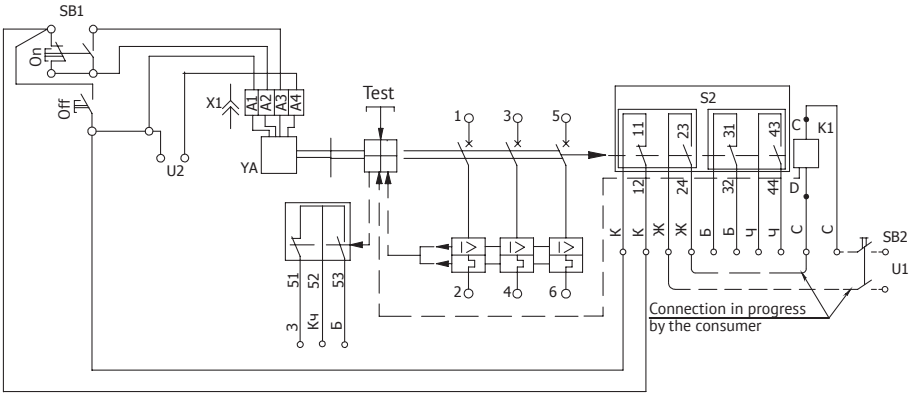

BA57-XX-XX54(56)30

Schematic of fixed circuit breakers with an electromagnetic drive, zero or undervoltage release, auxiliary contacts for signaling automatic tripping and auxiliary contacts

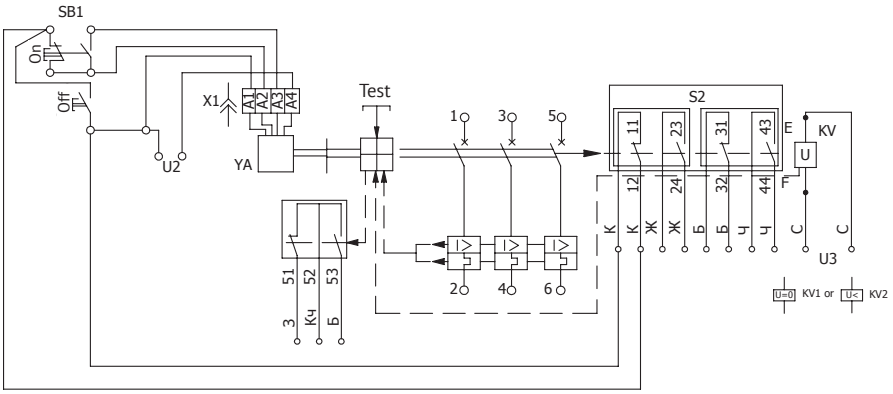

BA57-XX-XX4770

Scheme of withdrawable circuit breakers with shunt release, auxiliary contacts, auxiliary contacts for signaling automatic shutdown and an electromagnetic drive

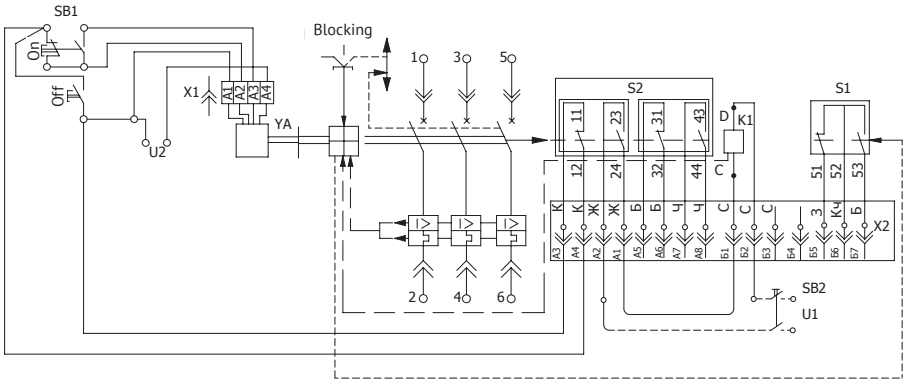

BA57-XX-XX4750

Diagram of withdrawable circuit breakers, with shunt release, auxiliary contacts, auxiliary automatic shutdown alarm contacts

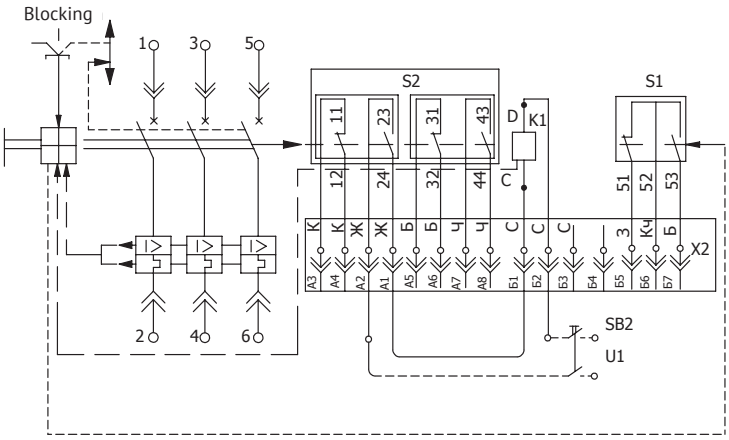

BA57-XX-XX54(56)70

Scheme of withdrawable circuit breakers, with zero or undervoltage release, auxiliary contacts for signaling automatic tripping, auxiliary contacts and an electromagnetic drive

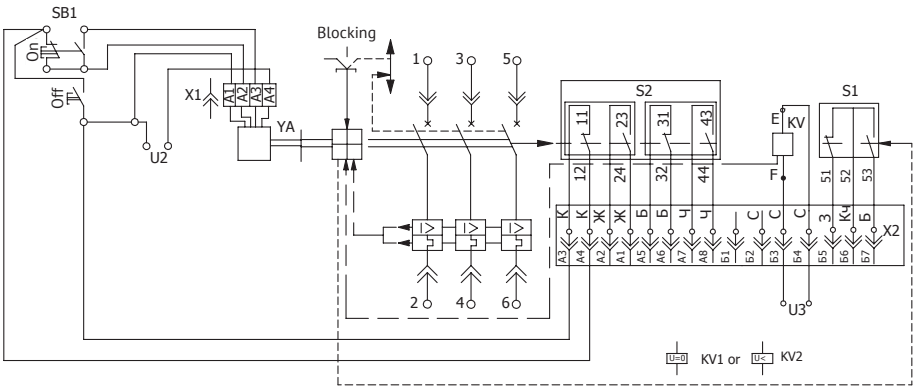

BA57-XX-XX54(56)50

Diagram of withdrawable circuit breakers, with zero or undervoltage release, auxiliary automatic shutdown signaling contacts, auxiliary contacts

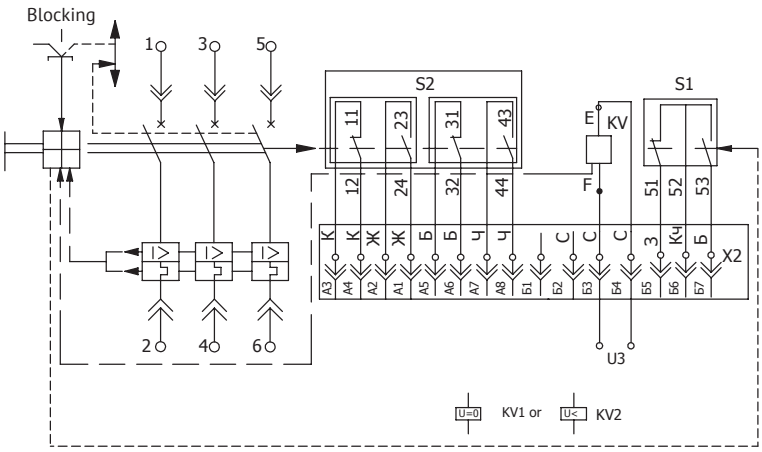

Solenoid drive circuit

AC solenoid drive

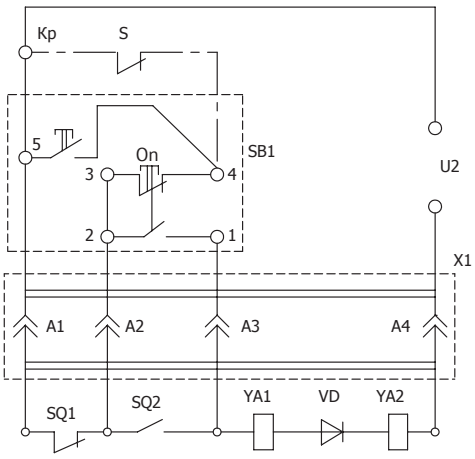

The diagram of the electromagnetic drive is shown for the circuit breaker in the off position.

Connecting external conductors to the terminals of circuit breakers in DC circuits

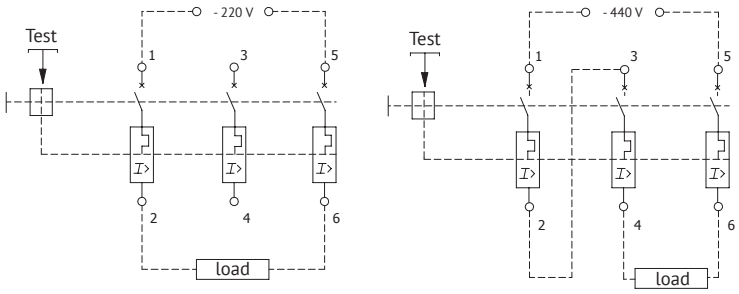

Clamps 2-3 are connected by the consumer

Moulded Case Circuit Breakers (MCCB) of VA53, VA55 series

Comply with the requirements of standards GOST R 50030.2 CU TR 004/2011

from 250 A to 2000 A | 85kA MSC | -50°C +55°C | ±90° | 3 of INDICATOR | 6 of CONTROLLERS | SELF-EXTINGUISHING | MSK 9 POINTS | RIVER REGIST | MARITIME REGISTER

Circuit breakers are designed to protect the electrical circuits of alternating current with a frequency of 50/60 Hz, voltage up to 690 V, short circuit currents and overloads, transmission of electricity in the rated mode for infrequent operational switching on and off (up to 6 per hour) of the specified circuits, infrequent direct starts of asynchronous motors. Circuit breakers with the acceptance of the Russian Maritime Register of Shipping (hereinafter RS) and the Russian River Register (hereinafter RRR) are designed to protect marine electrical equipment.
VA53 circuit breakers - current-limiting (category A).
VA53 circuit breakers - selective (category B).

Benefits

- Implementation of any technical solutions
  - Full range of products for currents from 250 to 2000 A;
  - large values of the limiting switching capacity of 85 kA (AC);
  - ability to adjust the current setting and response time.
- Confidence in reliable operation
  - stability of temperature indicators, due to the small transition resistance;
  - availability of resistance to the dynamic and thermal effects of short circuit currents;
  - a guarantee of non-weldability of contacts at emergency short-circuit currents.
- Advanced applications
  - protection of electrical equipment of sea, river ships and port infrastructure, confirmed by type approval certificates of PMRS and RRR;
  - possibility of using in conditions of high vibration and shock resistance (earthquake resistance 9 points according to MSK-64);
  - possibility of application in harsh environments, climatic modifications of UHL and OM.

Features

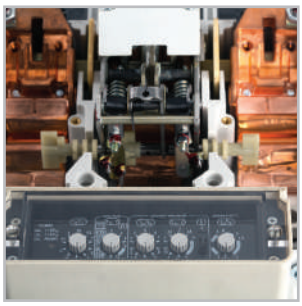

Availability of microprocessor overcurrent trip device.

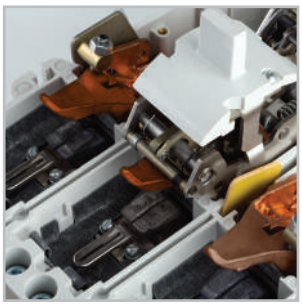

The use of extruded silver graphite contacts in the contact system.

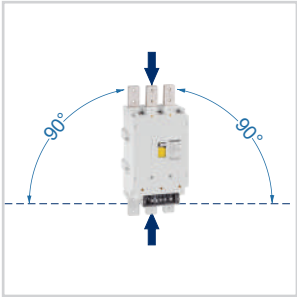

Mounting upright or turning right / left 90°. Power supply from above and below.

Operation temperature from -50 to + 55° C.

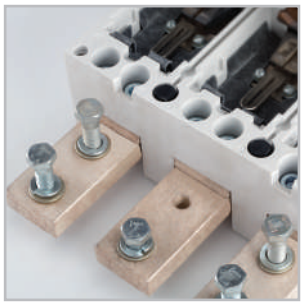

Silver plated outputs.

Structure of the designation of circuit breakers VA53 (VA55) series

VA55 (VA53)-X_1-$X_2X_3X_4X_5X_6$- X_7...A-690AC-X_8...-X_9...-X_{10}...-X_{11}...-KEAZ

<table>
<tr><td>VA55 (VA53)</td><td>- VA53 - current-limiting (category A); VA55 - selective (category B)</td></tr>
<tr><td>X_1</td><td>- designation of rated current: 41 - 250 A, 400 A, 630 A, 1000 A; 43 - 1600 A, 2000 A</td></tr>
<tr><td>X_2</td><td>- 3 - number of poles</td></tr>
<tr><td>X_3</td><td>- 3 - with microprocessor-VAsed release for protection against overloads, short circuits, single-phase short circuits and inrush current
- 4 - with microprocessor-VAsed release for protection against overloads, short circuits, and inrush current</td></tr>
<tr><td>X_4</td><td>- Two-digit number. Designation of additional assembly units:
<table>
<tr><th rowspan="3">Designation</th><th colspan="3">Number of auxiliary contacts (free)</th><th colspan="2">Number of additional auxiliary contacts (free)</th><th rowspan="3">Independent release</th><th rowspan="3">Signal contact</th></tr>
<tr><th rowspan="2">closing</th><th colspan="2">opening</th><th rowspan="2">closing</th><th rowspan="2">opening</th></tr>
<tr><th>with manual drive</th><th>with electromagnetic drive</th></tr>
<tr><td>00</td><td>-</td><td>-</td><td>-</td><td>-</td><td>-</td><td>-</td><td>-</td></tr>
<tr><td>11</td><td>2</td><td>2</td><td>1</td><td>2</td><td>2</td><td>-</td><td>-</td></tr>
<tr><td>18</td><td>1</td><td>2</td><td>1</td><td>2</td><td>2</td><td>+</td><td>-</td></tr>
<tr><td>45</td><td>-</td><td>-</td><td>-</td><td>-</td><td>-</td><td>-</td><td>+</td></tr>
<tr><td>46</td><td>2</td><td>2</td><td>1</td><td>2</td><td>2</td><td>-</td><td>+</td></tr>
<tr><td>47</td><td>1</td><td>2</td><td>1</td><td>2</td><td>2</td><td>+</td><td>+</td></tr>
<tr><td>51</td><td>2</td><td>2</td><td>1</td><td>-</td><td>-</td><td>-</td><td>-</td></tr>
<tr><td>52</td><td>1</td><td>2</td><td>1</td><td>-</td><td>-</td><td>+</td><td>-</td></tr>
</table></td></tr>
<tr><td>X_5</td><td>- Type of drive in combination with installation method:
1 - manual drive, stationary version;
3 - electromagnetic drive, stationary version;
5 - manual drive, retractable version;
7 - electromagnetic drive, retractable version (up to 1600A inclusive)</td></tr>
<tr><td>X_6</td><td>- Additional mechanisms:
0 - absent;
6 - bracket for locking a stationary switch with a manual drive in the “off” position</td></tr>
<tr><td>X_7...A</td><td>- Rated current in amperes: 250 A; 400 A; 630 A; 1000 A; 1600 A; 2000 A</td></tr>
<tr><td>690 AC</td><td>- Rated voltage of AC circuit breaker</td></tr>
<tr><td>X_8...</td><td>- Independent release parameters (if available): rated voltage and type of current of the independent release (HP230AC/220DC; HP400AC)</td></tr>
<tr><td>X_9...</td><td>- Electromagnetic Drive Parameters (if any): rated voltage and type of current of the electromagnetic drive (PE230AC; PE400AC)</td></tr>
<tr><td>X_{10}...</td><td>- Climatic category:
UHLZ;
OM4 (only for circuit breakers with acceptance of the Russian Maritime Register of Shipping)</td></tr>
<tr><td>X_{11}...</td><td>- Type of acceptance, terms of delivery:
Э - for export;
РЕГ - for breakers with acceptance of the Russian Maritime Register of Shipping and the Russian River Register;
in the absence - acceptance of quality control</td></tr>
<tr><td>KEAZ</td><td>- Trademark</td></tr>
</table>

Specifications

Designation параметра	Обозначение параметра				
Серии					
	VA53-41	VA55-41	VA53-43	VA55-43	
Number of poles	3				
Rated operating voltage in the AC circuit of 50/60 Hz (U_e), V	690				
Rated current I_n, A	250; 400; 630; 1000		1600 2000**		
Microprocessor release rated current settings in multiples of the circuit breaker rated current, I_R/I_n	0.36; 0.4; 0.45; 0.5; 0.56; 0.63; 0.7; 0.8; 0.9; 1.0				
Setting the response time at a current of $6I_R$, t_R, c	2; 4; 8; 16 [1)] 2; 4; 8; 12 [2)]				
Setting for the operation current in the zone of short circuit, I_{sd}/I_R	1.5; 2; 3; 4; 5; 6; 7; 8; 9; 10				
Setting of the response time in the selectivity zone T_{SD}, s	0; 0.1; 0.15; 0.2; 0.25; 0.3; 0.35; 0.4				
Instantaneous current without time delay, kA	7	20	14	30	
Category of use	A	B	A	B	
Rated working maximum breaking capacity (Ics) and rated maximum greatest breaking capacity (Icu):					
at a voltage of 400 V and a power factor of 0.2, kA	85	55	85	63	
at a voltage of 690 V and a power factor of 0.25, kA	33.5		33.5		
Wear resistance					
Total, on/off cycles	3000		3000		
Switching of main contacts, on/off cycles	500		500		
Switching of aux.contacts, on/off cycles	3000		3000		
Under the action of an independent release, on/off cycles	500		500		
Rated operating values of mechanical factors in accordance with GOST 17516.1-90	M4				
Earthquake resistance according to GOST 17516.1-90 (MSK-64)	DT, 5, 6 (up to 9 points)				
Operating mode	Continuous				
Outputs of the main contacts allow front connection of copper and aluminum *** busVArs with cross-section, mm	from 40x4 to 2x(60x12)		from 2x(90x4) from 2x(100x12)		
Degree of environmental protection according to GOST 14255	IP20 (breaker shell), IP00 (outlets)				
Weight, kg	to 1000 A		to 1600 A	to 2000 A	to 1600 A	to 2000 A
with manual drive, stationary	up to 28.1		up to 43	up to 48.5	up to 43	up to 48.5
with electromagnetic drive, stationary	up to 35		up to 51	up to 56.5	up to 51	up to 56.5
with Remote manual drive, retractable	up to 45		up to 95	-	up to 95	-
with electromagnetic drive, retractable	up to 50		up to 100	-	up to 100	-

1) for the protective characteristics with inverse-square dependence;
2) for the protective characteristic with inverse cubic dependence;
** in the mode of normal loads according to GOST IEC 60947-5-1;*
*** only for stationary front-mounted circuit breakers for operating conditions at ambient temperature up to 40° C;*
****connection with aluminum buses is possible through sets of clamps for aluminum buses.*

Ways to connect

Circuit breaker version	VA55(VA53)-41		VA55(VA53)-43	
	Front attachment of buses	Rear attachment of buses	Front attachment of buses	Rear attachment of buses
Stationary	+	+	+	-
Retractable	-	+	-	+

Ordering Guidelines

The order must include:

- standard version;
- version (stationary / retractable);
- type of current, rated current of the circuit breaker, A;
- rated voltage of the circuit breaker: up to 690 V;
- availability and number of auxiliary contacts (closing / opening);
- type of current and the rated voltage of the independent release (U_c);
- presence of an electromagnetic drive, its rated voltage and type of current;
- availability and number of auxiliary alarm contacts;
- protection against single-phase short circuits and switching current;
- weight of the circuit breaker;
- climatic category and category of placement;
- type of acceptance, terms of delivery (Quality Control Department - not specified);
- Trademark.

By the separate order the following is delivered:

- set of four-socket clamps 4x185 sq.mm VA50-41-UHLZ (code 137611);
- Remote manual drive VA50-41-UHLZ (code 222611);
- Remote manual drive VA50-43-UHLZ (code 228730);
- additional handle VA50-43-UHLZ (code 218750)
- set of clamps for aluminum buses VA50-41-UHLZ (code 142810);
- set of clamps for aluminum buses VA50-43-1600A-UHLZ (code 142811);
- set of clamps for aluminum buses VA50-43-2000A-UHLZ (code 143590);
- PE operating kit for VA53, VA55 (code 243393).

Example of recording the designation of the automatic circuit breaker type VA55-43 for a rated current of 2000 A with a microprocessor overcurrent release with one closing and one opening contact, with two closing and two opening additional contacts, independent release 230 V, signal contacts, electromagnetic drive ~ 230 V stationary version:
VA55-43-334730-2000A-690AC-HP230AC/220DC-PE230AC-UHLZ-КЭАЗ ТУ 3422-038-05758109-2007.

Principle of operation of the release

Microprocessor overcurrent release is part of the circuit breaker VA50 and is designed to determine the state of three-phase electrical frequency AC networks
50/60 Hz voltage up to 690 V with operating currents up to 2000 A and the formation of a shutdown signal of the executive electromagnet when an emergency mode occurs in the protected circuit - overload, short circuit.
The microprocessor overcurrent release includes:
1. Current sensors, functionally representing current transformers placed in the main circuit of the circuit breaker.
Current sensors are designed for proportional conversion of alternating current flowing in the circuit of the main contacts of the circuit breaker into the output current supplied to the input of the electronic circuit of the microprocessor unit, as well as to power the electronic circuit of the microprocessor unit.
2. Microprocessor unit, the electronic circuit of which is based on the ATmega16 microcontroller. The microprocessor unit measures the signals from the current sensors, analyzes and controls the actuating electromagnet in accordance with the microcontroller's control program.
Determination of the protection parameters and operating modes of the microprocessor overcurrent release is carried out using the controls located on the front panel.
Microprocessor overcurrent releases are manufactured in two versions:
1. With protection against single-phase short circuits for circuit breakers of standard versions VA53(55)-XX-33XXXX-00UHLZ.
2. Without protection against single-phase short circuits for circuit breakers of standard versions VA53(55)-XX-34XXXX-00UHLZ.

The front panel of the microprocessor maximum current release with protection against single-phase short circuits is shown in Fig. 1.
The front panel of the microprocessor maximum current release without protection against single-phase short circuits is shown in Fig. 2.

Fig. 1

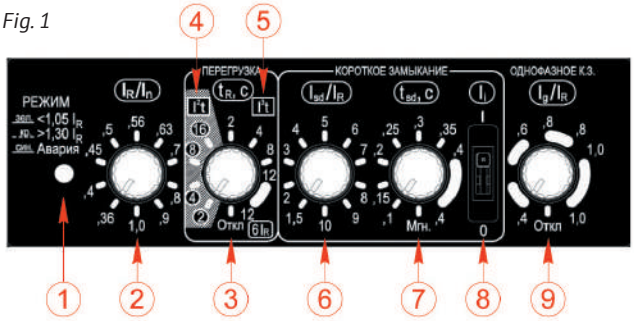

Fig. 2

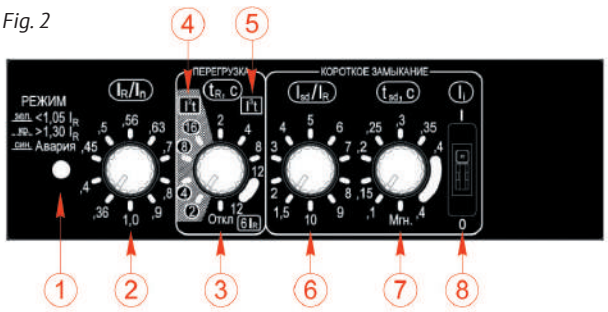

- 1 - indication of the state of the protected electric circuit and the operability of the microprocessor release;
- 2 - rated operating current setting switch;
- 3 - setpoint switch for response time at a current of 6 IR;
- 4 - zone of setpoints for response time for the inverse quadratic dependence;
- 5 - zone of setpoints for response time for the inverse cubic dependence;
- 6 - switch for the setting of operation current in the short circuit zone;
- 7 - setpoint switch for response time in the selectivity zone;
- 8 - on-current protection switch;
- 9 - operation current setting switch for single-phase short circuit.

Item numbers

Name*	Number of poles	Rated current, A	Rated voltage, V	Maximum breaking capacity, kA	Item number
VA55-41-334710-1000A-690AC-HP230AC/220DC-UHLZ	3	1000	690	55	108214
VA55-41-340010-1000A-690AC-UHLZ	3	1000	690	55	108238
VA55-41-344710-1000A-690AC-HP230AC/220DC-UHLZ	3	1000	690	55	108178
VA53-41-330010-1000A-690AC-UHLZ	3	1000	690	85	108187
VA53-41-340010-1000A-690AC-UHLZ	3	1000	690	85	108076
VA55-41-334730-1000A-690AC-HP230AC/220DC-PE230AC-UHLZ	3	1000	690	55	108228
VA55-41-344730-1000A-690AC-HP230AC/220DC-PE230AC-UHLZ	3	1000	690	55	108180
VA55-43-334710-1600A-690AC-HP230AC/220DC-UHLZ	3	1600	690	63	108088
VA55-43-340010-1600A-690AC-UHLZ	3	1600	690	63	108250
VA55-43-344710-1600A-690AC-HP230AC/220DC-UHLZ	3	1600	690	63	108194
VA55-43-334730-1600A-690AC-HP230AC/220DC-PE230AC-UHLZ	3	1600	690	63	108100
VA55-43-344730-1600A-690AC-HP230AC/220DC-PE230AC-UHLZ	3	1600	690	63	108197
VA55-43-344770-1600A-690AC-HP230AC/220DC-PE230AC-UHLZ	3	1600	690	63	108235
VA55-43-340010-2000A-690AC-UHLZ	3	2000	690	63	108252
VA55-43-344710-2000A-690AC-HP230AC/220DC-UHLZ	3	2000	690	63	108205
VA55-43-334730-2000A-690AC-HP230AC/220DC-PE230AC-UHLZ	3	2000	690	63	108117
VA55-43-344730-2000A-690AC-HP230AC/220DC-PE230AC-UHLZ	3	2000	690	63	108204
VA53-43-344730-2000A-690AC-HP230AC/220DC-PE230AC-UHLZ	3	2000	690	85	108271
VA55-41-330010-630A-690AC-UHLZ	3	630	690	55	220434
VA55-41-330010-630A-690AC-UHLZ (rear connection)	3	630	690	55	220444
VA55-41-340010-400A-690AC-UHLZ	3	400	690	55	228119
VA55-41-340010-630A-690AC-UHLZ	3	630	690	55	147744
VA55-41-341810-630A-690AC-HP230AC/220DC-UHLZ	3	630	690	55	220431
VA55-41-330010-1000A-690AC-UHLZ	3	1000	690	55	108209
VA55-41-331810-1000A-690AC-HP230AC/220DC-UHLZ	3	1000	690	55	108172
VA55-41-340016-1000A-690AC-UHLZ	3	1000	690	55	118272
VA55-41-341810-1000A-690AC-HP230AC/220DC-UHLZ	3	1000	690	55	108242
VA53-41-331810-1000A-690AC-HP230AC/220DC-UHLZ	3	1000	690	85	143073
VA53-41-331810-1000A-690AC-HP230AC/220DC-UHLZ (rear connection)	3	1000	690	85	220484
VA53-41-341810-1000A-690AC-HP230AC/220DC-UHLZ	3	1000	690	85	108207
VA53-41-344710-1000A-690AC-HP230AC/220DC-UHLZ	3	1000	690	85	108266
VA55-41-334730-630A-690AC-HP230AC/220DC-PE230AC-UHLZ	3	630	690	55	217109
VA55-41-344730-630A-690AC-HP230AC/220DC-PE230AC-UHLZ	3	630	690	55	147745
VA55-41-334730-400A-690AC-HP230AC/220DC-PE400AC-UHLZ	3	400	690	55	245793

**The complete list of all versions of VA53 and VA55 circuit breakers can be found at www.keaz.ru*

Delivery set

Name	VA55/VA53	VA55/VA53 retractable version
Circuit breaker	+	+
The handle of the circuit breaker to control through the door of the HKY for versions with Remote manual drive	-	+
Key for locking the circuit breaker with Remote manual drive in positions "enabled" and "disabled" 2 pcs.	-	+
Lever for moving the retractable circuit breaker 2 pcs.	-	+
Terminal cover for stationary front attachment circuit breakers only	+	-
Additional handle for operating the manual-operated circuit breakers VA55/VA53-43	+	-
Fastening kit for connecting external conductors (1 set)	+	+
Operation Manual	+	+
Certificate	+	+
Certificate of Conformity for a batch delivered to one address	+	+

Additional devices

Auxiliary contacts

Auxiliary contacts VK are designed to switching control circuits. Minimum switching current 5 mA at voltage of 17 V.

Current type	DC			AC			
Rated voltage, U_e, V	24	110	220	48	127	230	400
Rated operating current, A	4	1	0,4	4	4	2	1

Auxiliary alarm contact (alarm contact) of auto shut off
Rated voltage scale:
- 400 VAC 50/60 Hz;
- 220 VDC.

Conventional thermal current, I_{the} - 2 A

	AC				DC		
Rated voltage, U_e, V	48	127	230	400	24	110	220
Rated current, I_e, A	4	4	2	1	2	0,4	0,2

The terminals of the auxiliary contacts, the signal contact and the independent release are made with a flexible insulated wire.

Independent trip device

Independent trip device provides:
- switching off the on-off circuit breaker when applying voltage of direct or alternating current to the terminals of the coil of the release;
- disconnection of the circuit breaker when the voltage is applied from 0.7 to 1.2 of the rated value.

The power consumed by the independent release does not exceed 300 watts.

Rated voltage (U_c), V	
AC	DC
230; 400	220

Electromagnetic drive

Electromagnetic drive provides remote control of the circuit breaker at a voltage of 0.85 to 1.1 of the nominal value.
Electromagnetic drive is available in two versions for rated voltages of 230 V and 400 V AC at 50/60 Hz. The power consumed by the electromagnetic drive is not more than 3200 V · A.

Handle locking device

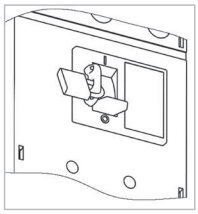

Handle locking device is designed to lock the circuit breaker switch handle in the "Off" position to ensure the safety of people during the repair and maintenance of equipment.

Retractable version with Remote manual drive

Retractable version with Remote manual drive is designed to quickly replace the circuit breaker and provide a visible break of the current-carrying parts. The retractable version is equipped with locks to prevent attempts to replace the circuit breaker without turning it to the "Off" position.

Set of clamps

Set of clamps for aluminum buses
A set of clamps for connection to aluminum buses is a set of disc washers designed to connect automatic circuit breakers VA55 (VA53).

Set of four-socket clamps
Block for connecting four cables with cross section up to 185 mm² without cable lugs. The minimum cable cross-section is 95 mm².

Overall, installation and mounting dimensions

VA53-41 and VA55-41 with manual drive for rated currents 250 A, 400 A, 630 A, 1000 A

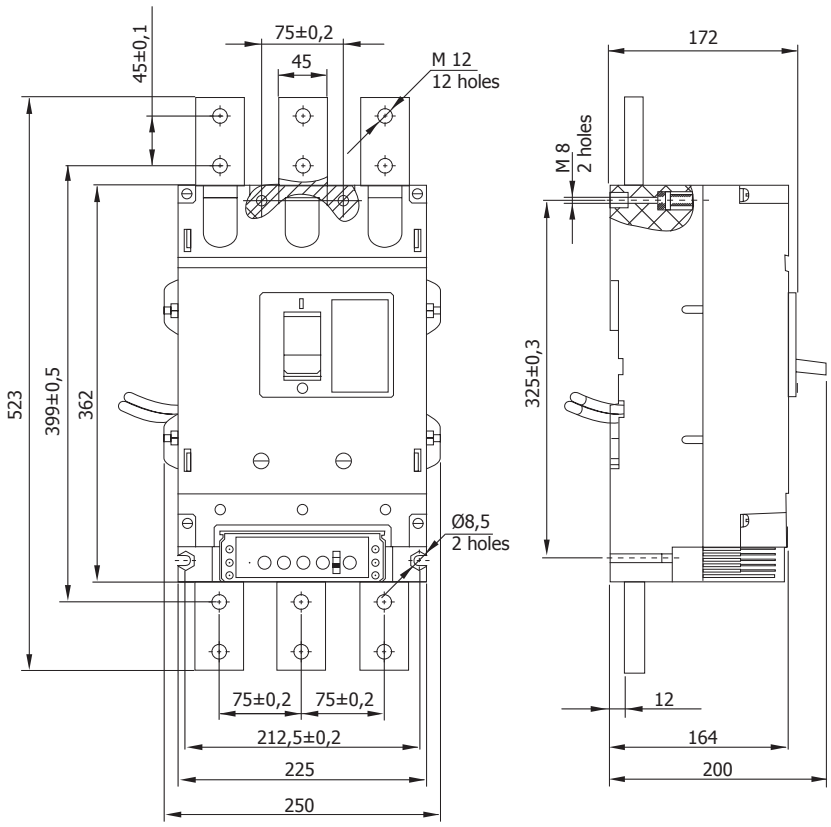

VA53-41 and VA55-41 with EM remote drive for rated currents 250 A, 400 A, 630 A, 1000 A

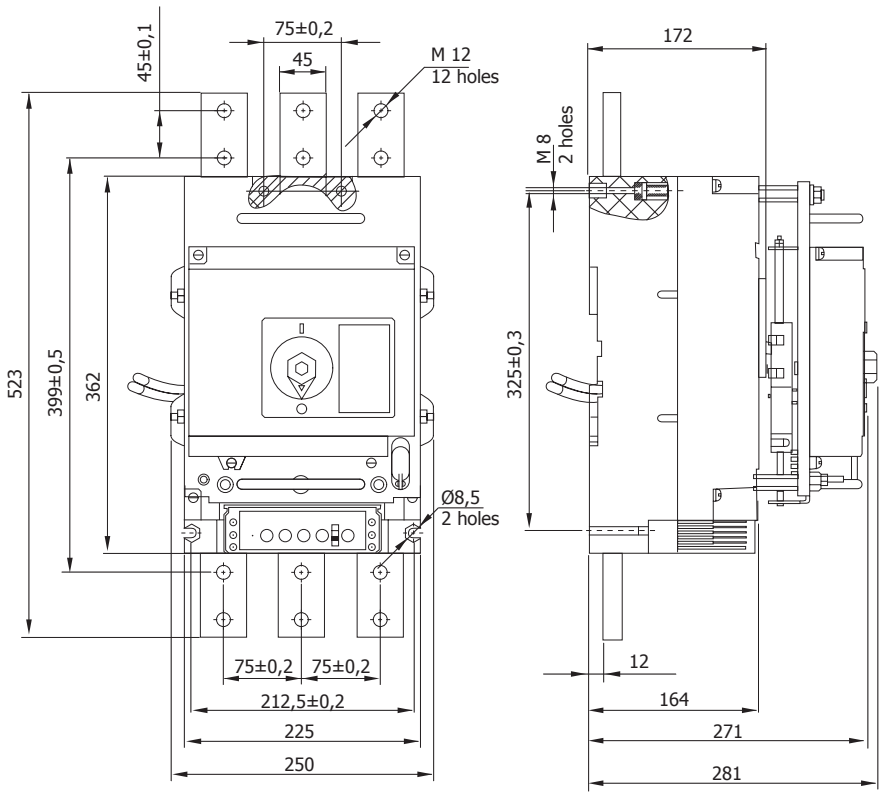

VA53-41 and VA55-41 with manual drive of rear connection for rated currents 250 A, 400 A, 630 A, 1000 A

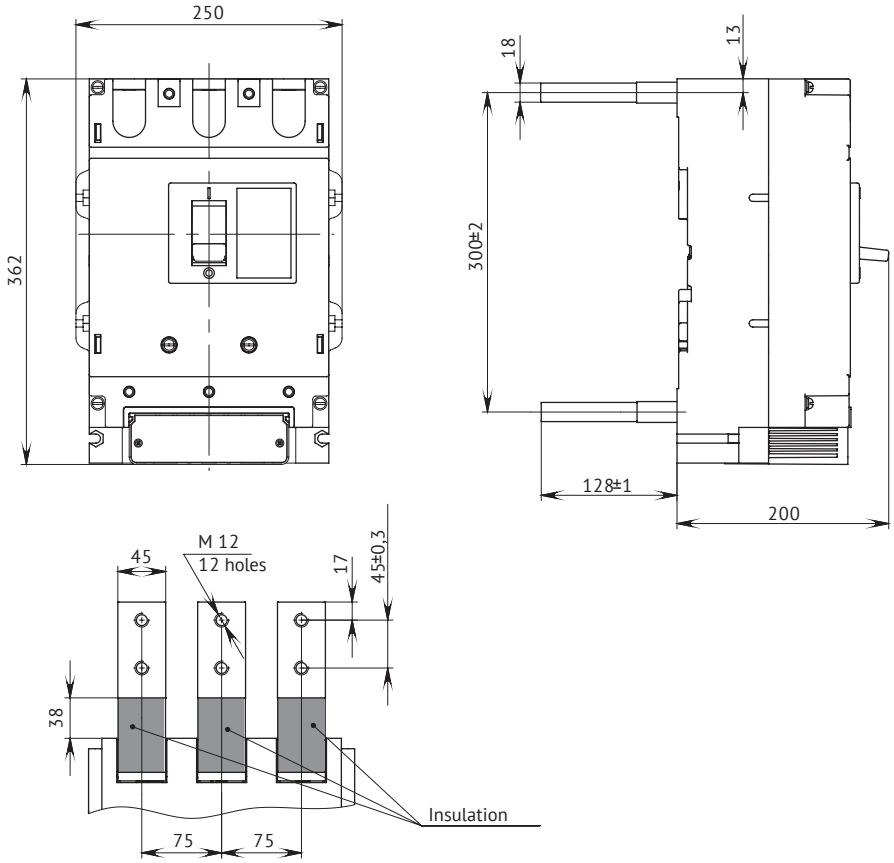

VA53-41 and VA55-41 with EM drive of rear connection for rated currents 250 A, 400 A, 630 A, 1000 A

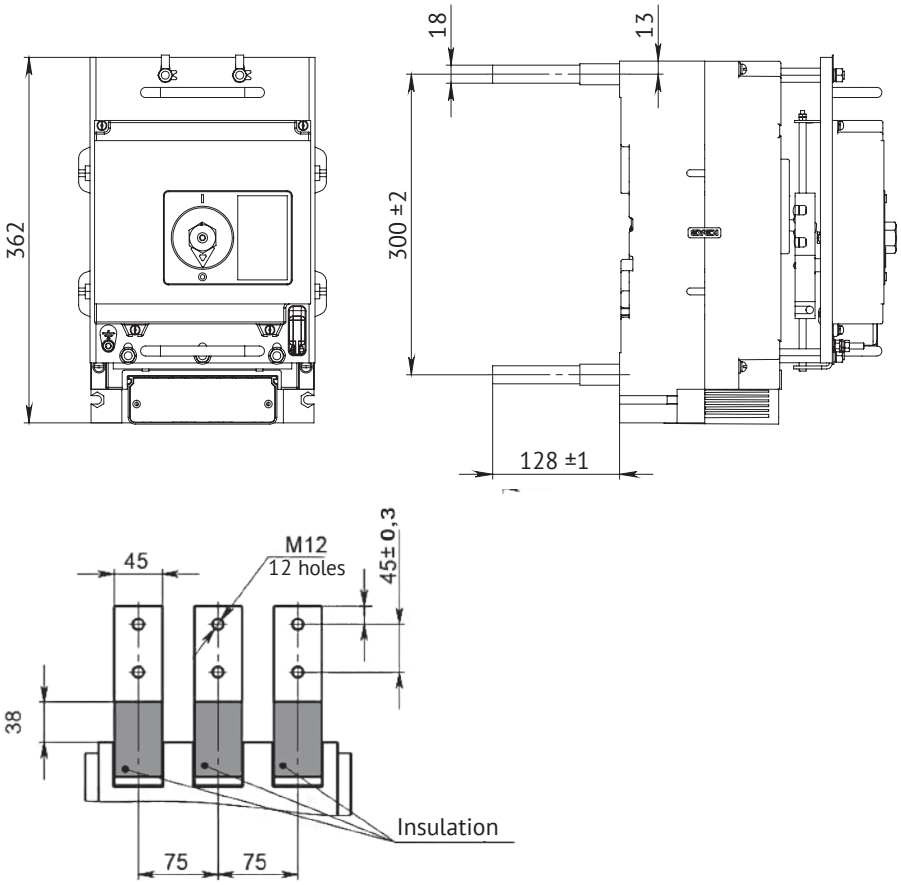

Retractable versions of VA53-41 and VA55-41 circuit breakers with EM remote drive for rated currents 250 A, 400 A, 630 A, 1000 A

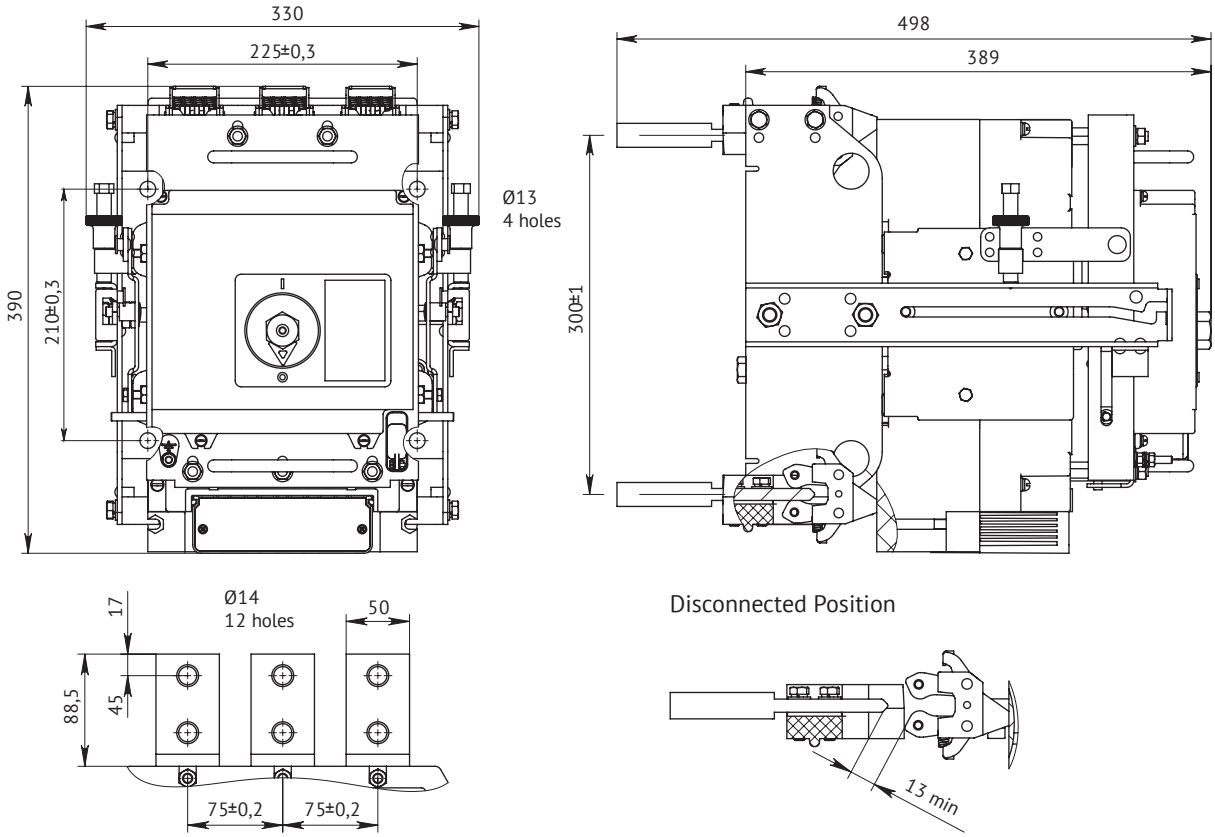

Retractable versions of VA53-41 and VA55-41 circuit breakers with Remote manual drive for control through the door for rated currents 250 A, 400 A, 630 A, 1000 A

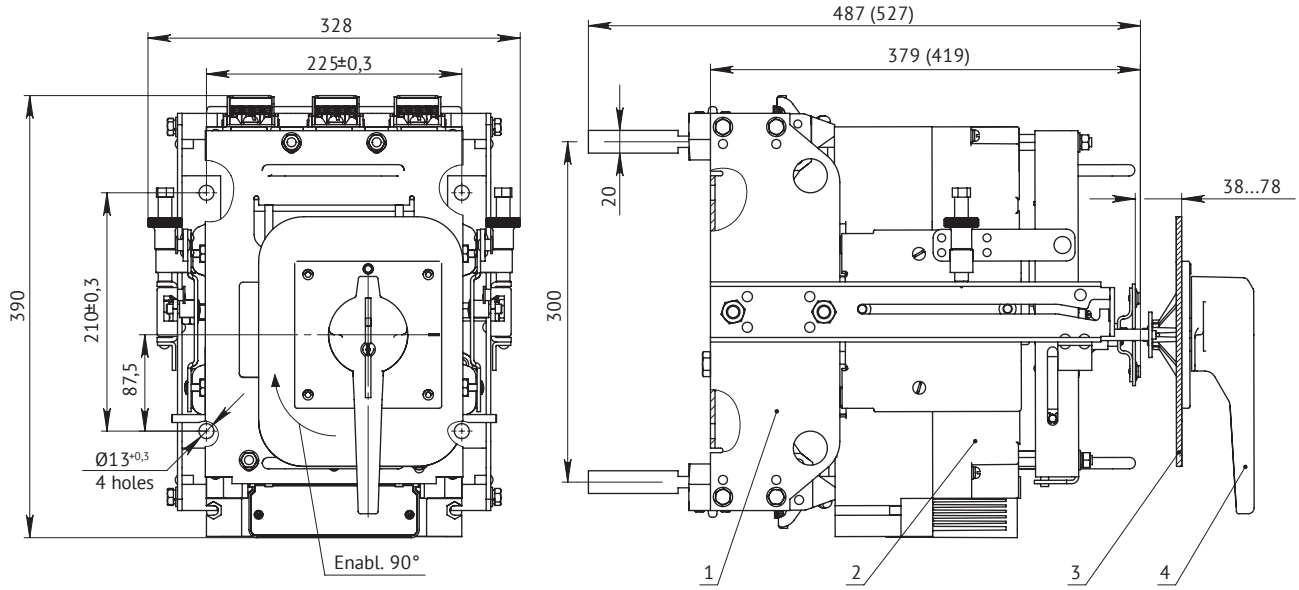

1 - frame; 2 - circuit breaker;
3 - cabinet door; 4 - control handle.

** Dimensions in brackets are indicated for the "Disconnected" position.*

VA53-43 and VA55-43 with manual drive for rated current 2000 A

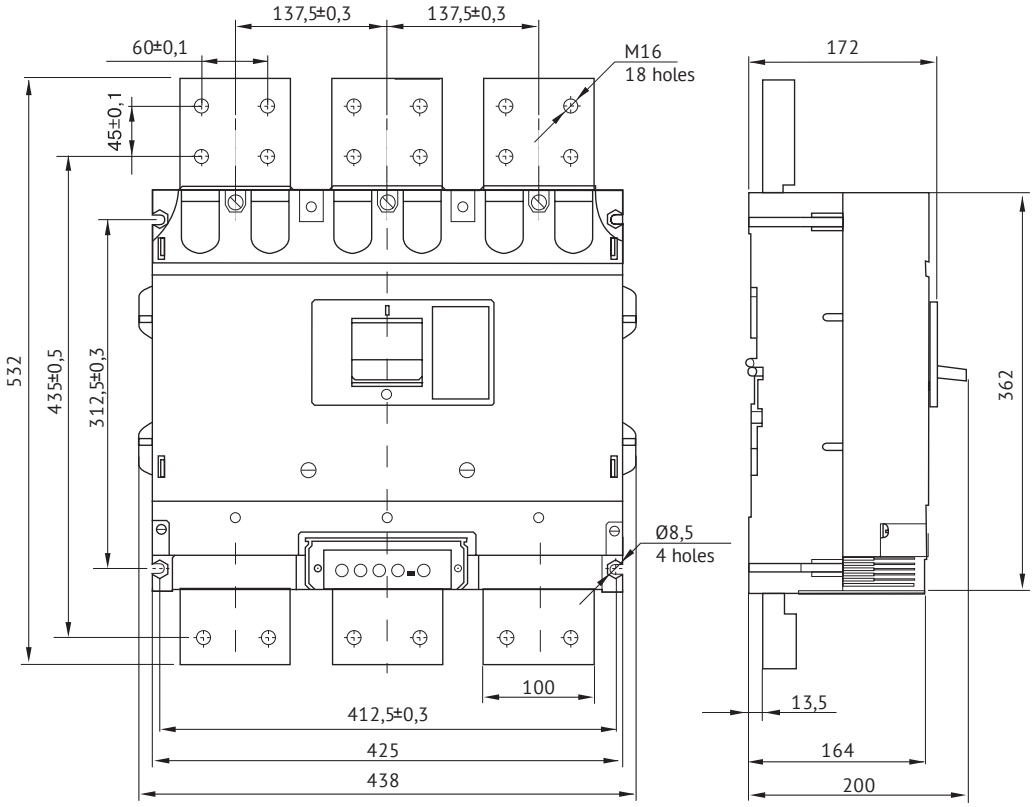

VA53-43 and VA55-43 with electromagnetic remote drive for rated current 2000 A

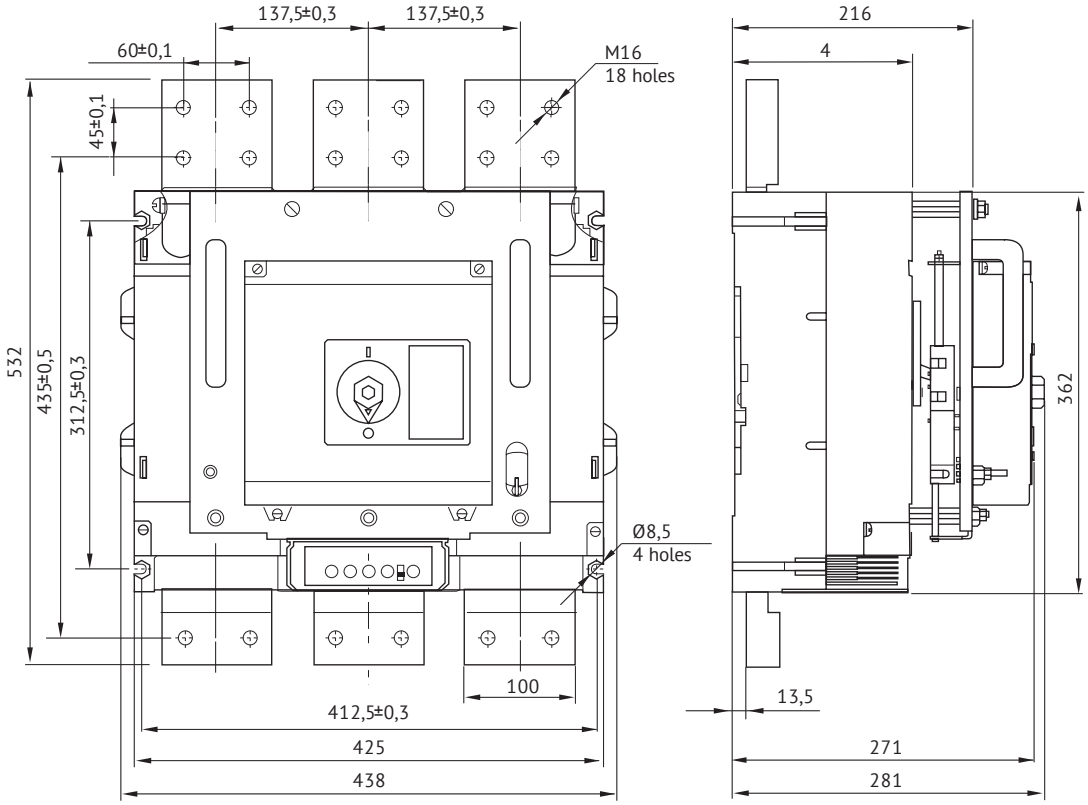

VA53-43 and VA55-43 with manual drive for rated current 1600 A

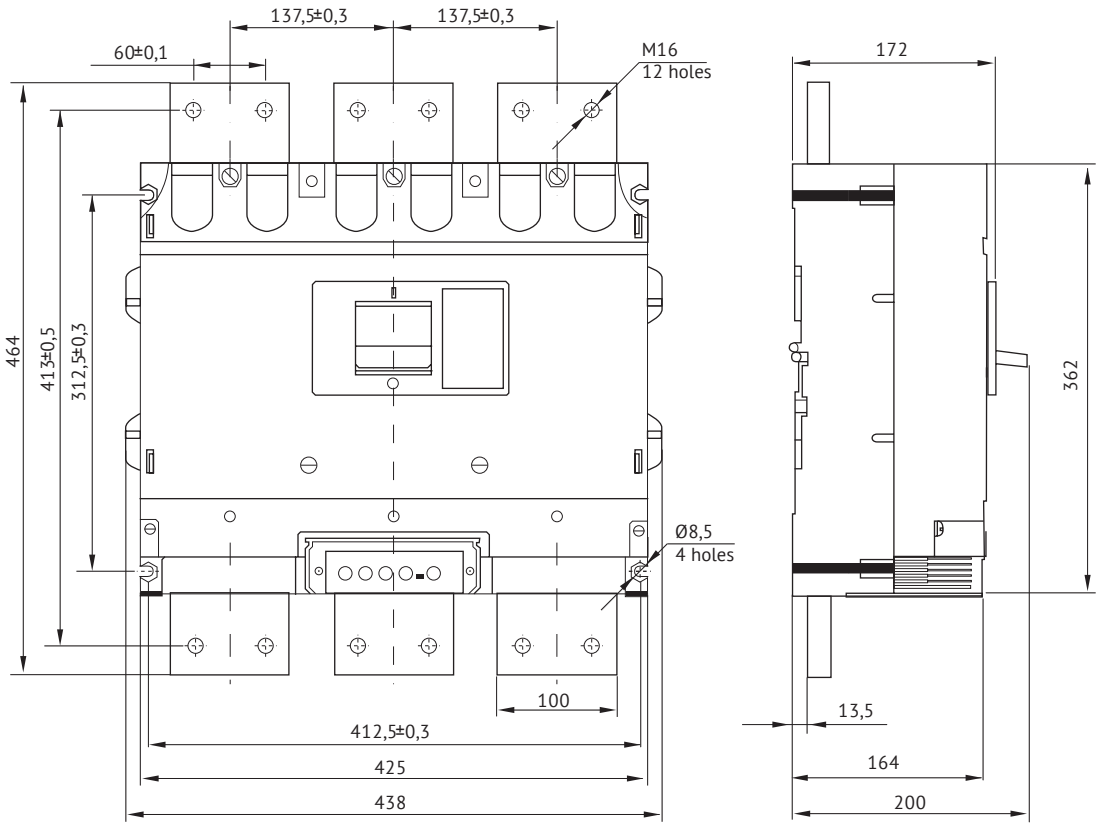

VA53-43 and VA55-43 with electromagnetic remote drive for rated current 1600 A

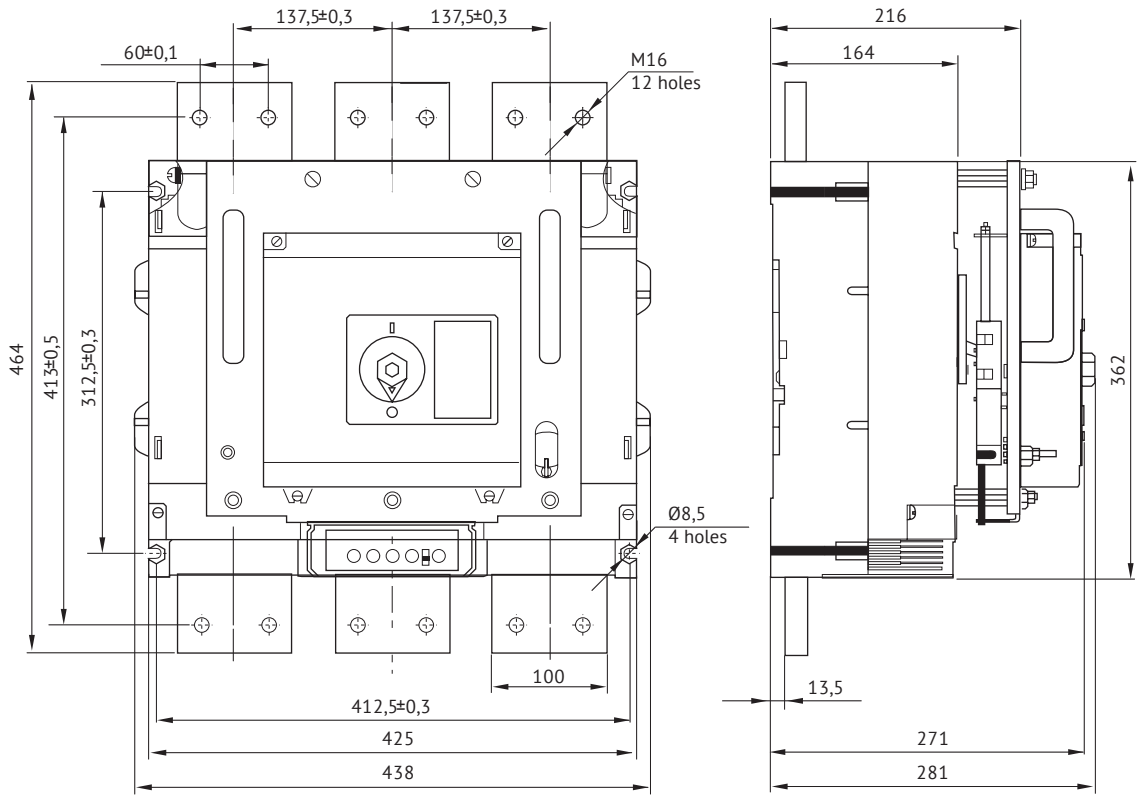

Retractable versions of VA53-43 and VA55-43 circuit breakers with electromagnetic remote drive for rated current 1600 A

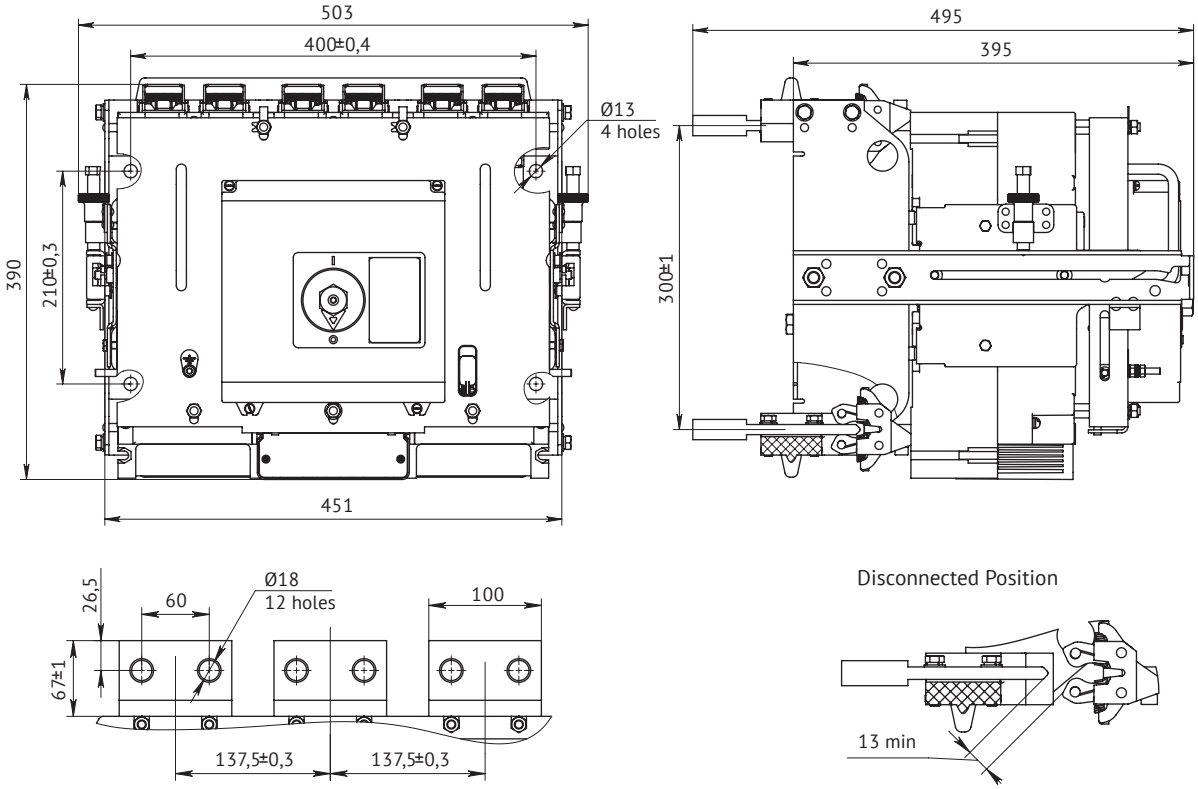

Retractable versions of VA53-43 and VA55-43 circuit breakers with a Remote manual drive to control through the door of the low-voltage switchgear NKU with rated current 1600 A

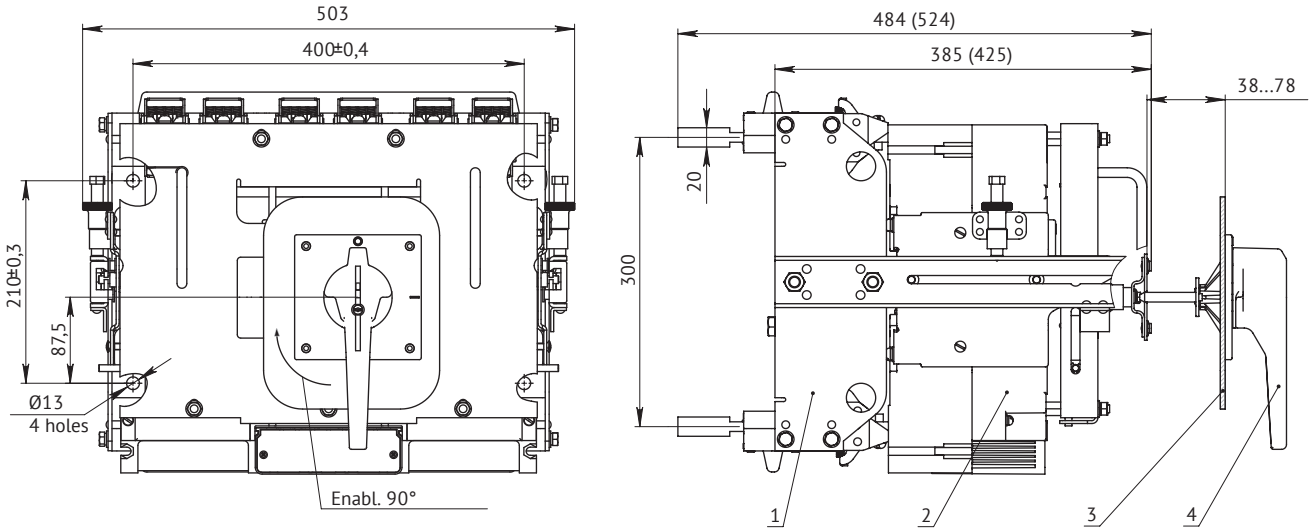

1 - frame;
2 - automatic switch;
3 - cabinet door;
4 - control handle.

** Dimensions in brackets are indicated for the "Disconnected" position.*

Remote manual drive to control the automatic circuit breakers VA55-41 and VA53-41 through the door of the NKU

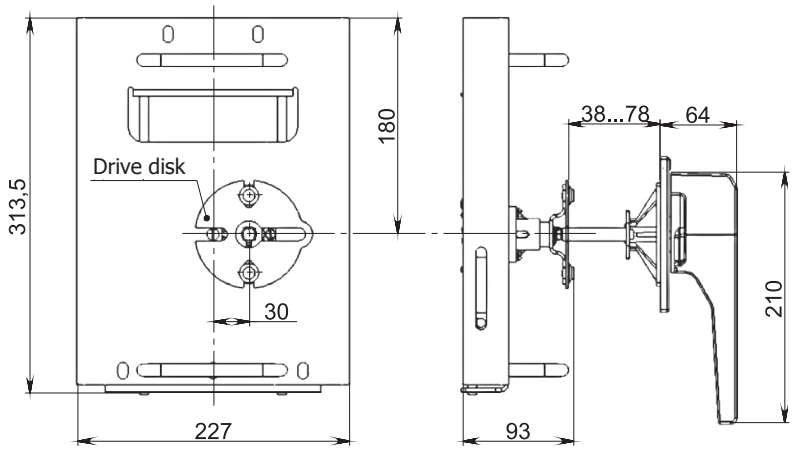

Overall dimensions of manual remote drive

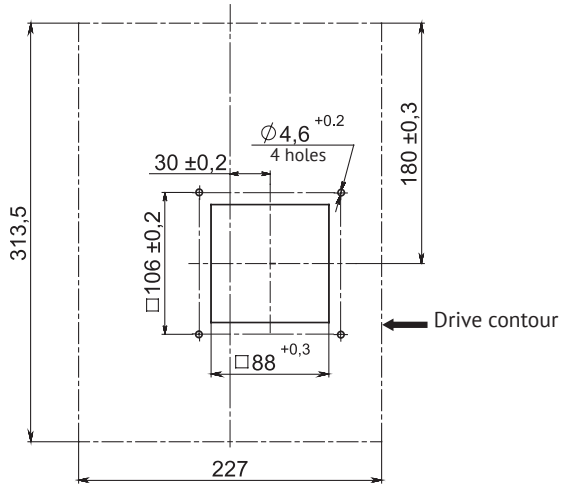

Making holes to install the handle on the NKU door relative to the contour of the drive.

Remote manual drive to control the automatic circuit breakers VA55-43 and VA53-43 through the door of the NKU

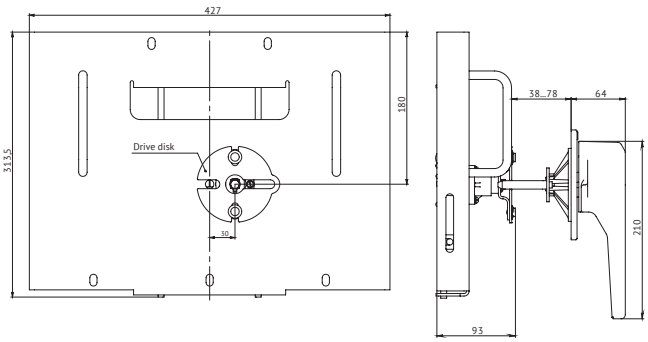

Overall dimensions of the remote manual drive

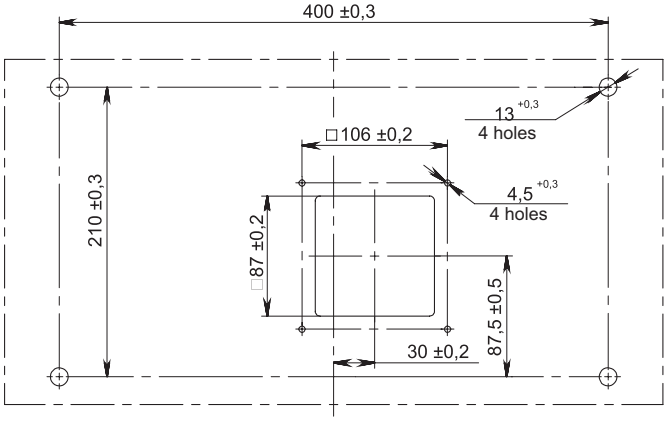

Making holes to install the handle on the NKU door relative to the contour of the drive.

Time-current characteristics

Inverse quadratic dependence

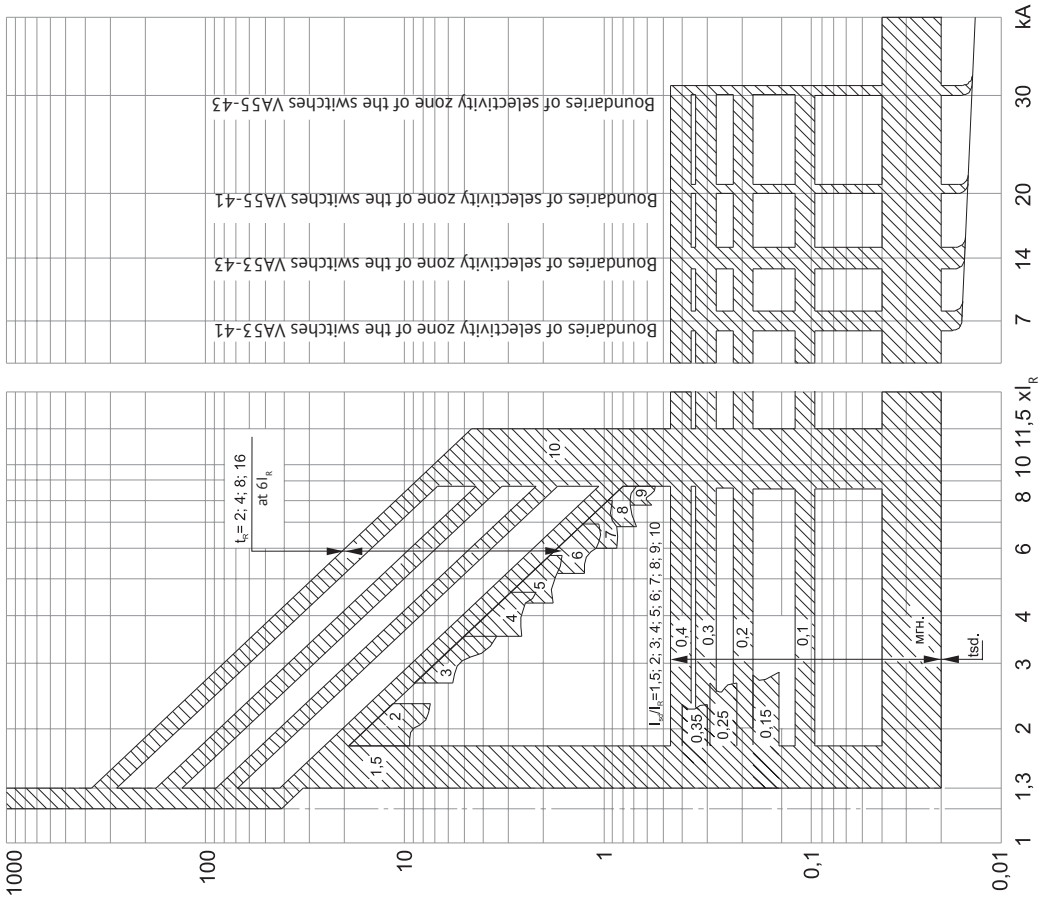

Inverse cubic dependence

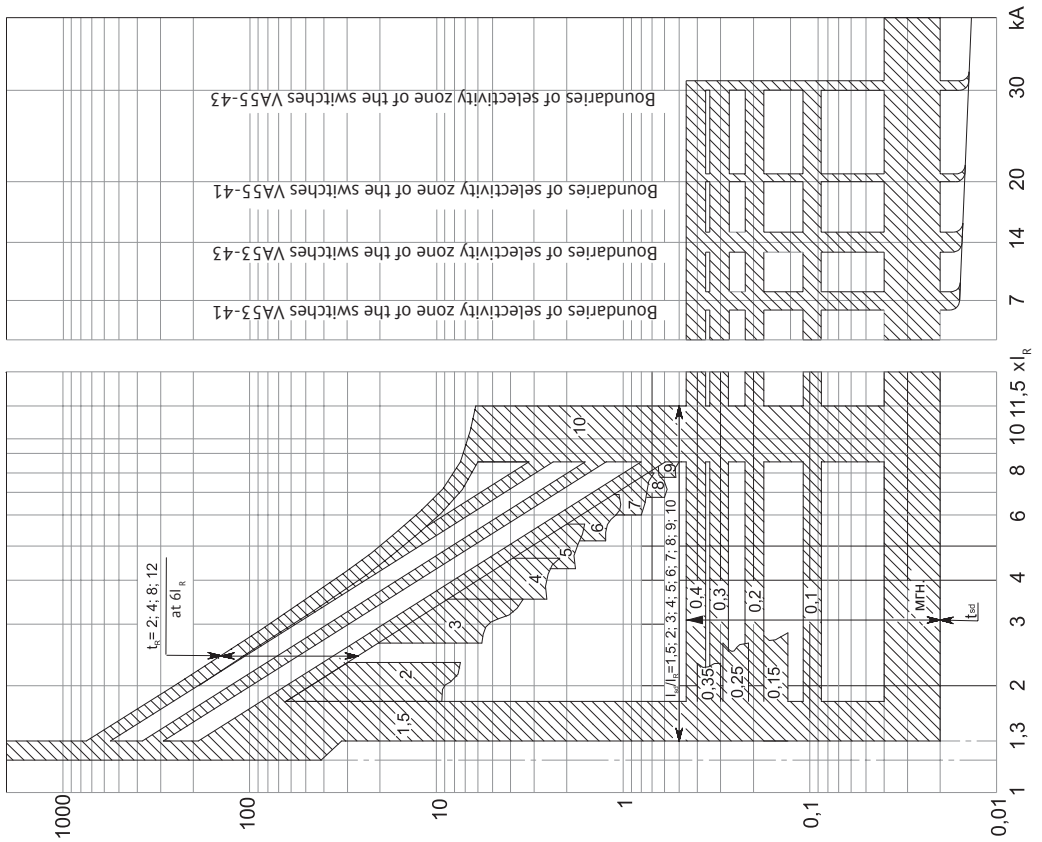

Circuit schematics

Circuit breaker

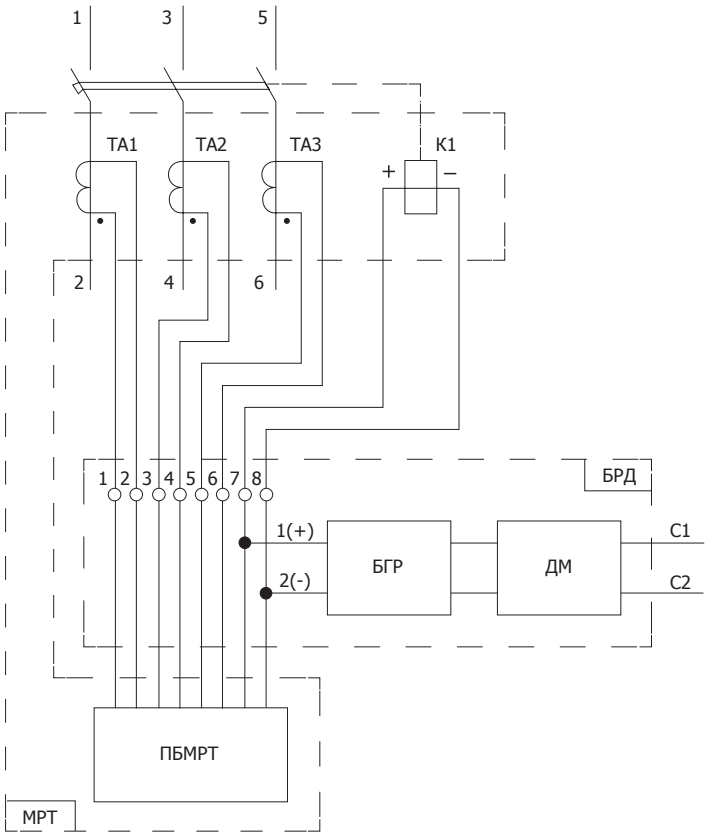

Designations adopted in the schemes:

БРД - block of resistors and diodes;
МРТ - maximum current release;
БГР - block of damping resistors;
ДМ - diode bridge;
РБМРТ - microprocessor unit for maximum current release;
S1 - signal contact;
$S2_1$; $S2_2$; $S2_3$; $S2_4$ - auxiliary contacts;
K1 - independent release;
SQ1, SQ2 - limit switches of the electromagnetic drive;
TA - current transformer;
YA - electromagnetic drive;
U1 - supply voltage of the independent release;
U2 - supply voltage of the electromagnetic drive;
YA1, YA2 - electromagnets of an electromagnetic drive;
SB1 - pushbutton switch of the electromagnetic drive;
SB2 - pushbutton switch of the independent release;
X1 - connector RP10-7 6PO.364.025 ТУ;
X2 - connector RP10-22 6PO.364.025 ТУ;
VD - diode;
Откл - switching off;
Вкл - switching on;
a - connection is made by the consumer.

Circuit breaker with optional assembly units

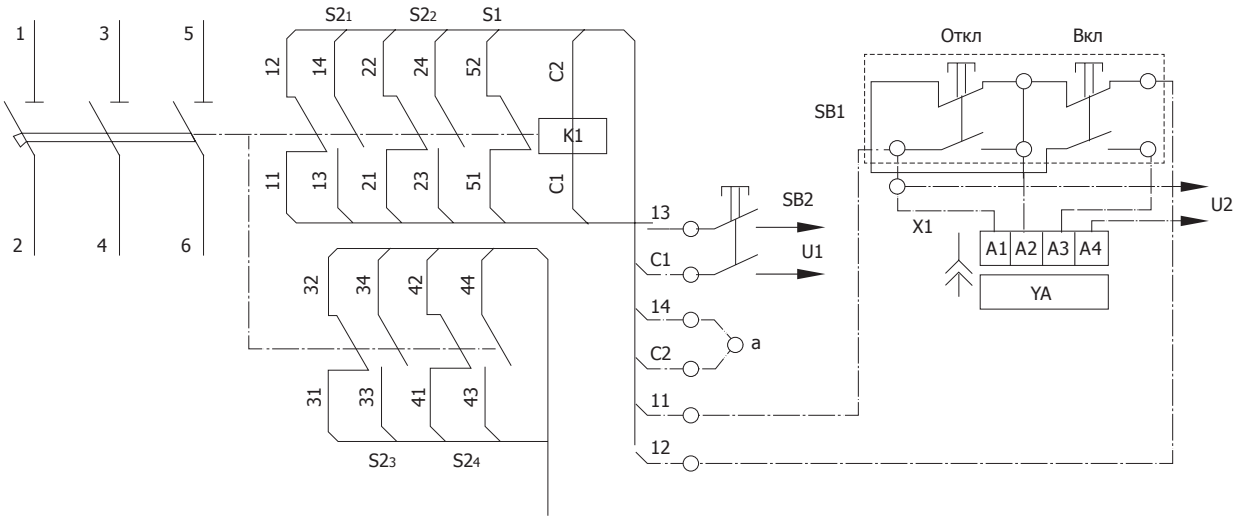

The circuit of signal contacts S1 are given for the breaker in the switching position "Disconnected automatically".

Position of auxiliary and signal contacts

Contact	Disconnected status	Auto Disconnected status	Disconnected manually status
VA53, VA55			
S21 11-12	open	closed	closed
S21 13-14	closed	open	open
S22 21-22	open	closed	closed
S22 23-24	closed	open	open
S23 31-32	open	closed	closed
S23 33-34	closed	open	open
S24 41-42	open	closed	closed
S24 43-44	closed	open	open
S1 51-52	open	closed	open

Retractable circuit breaker with optional assembly units

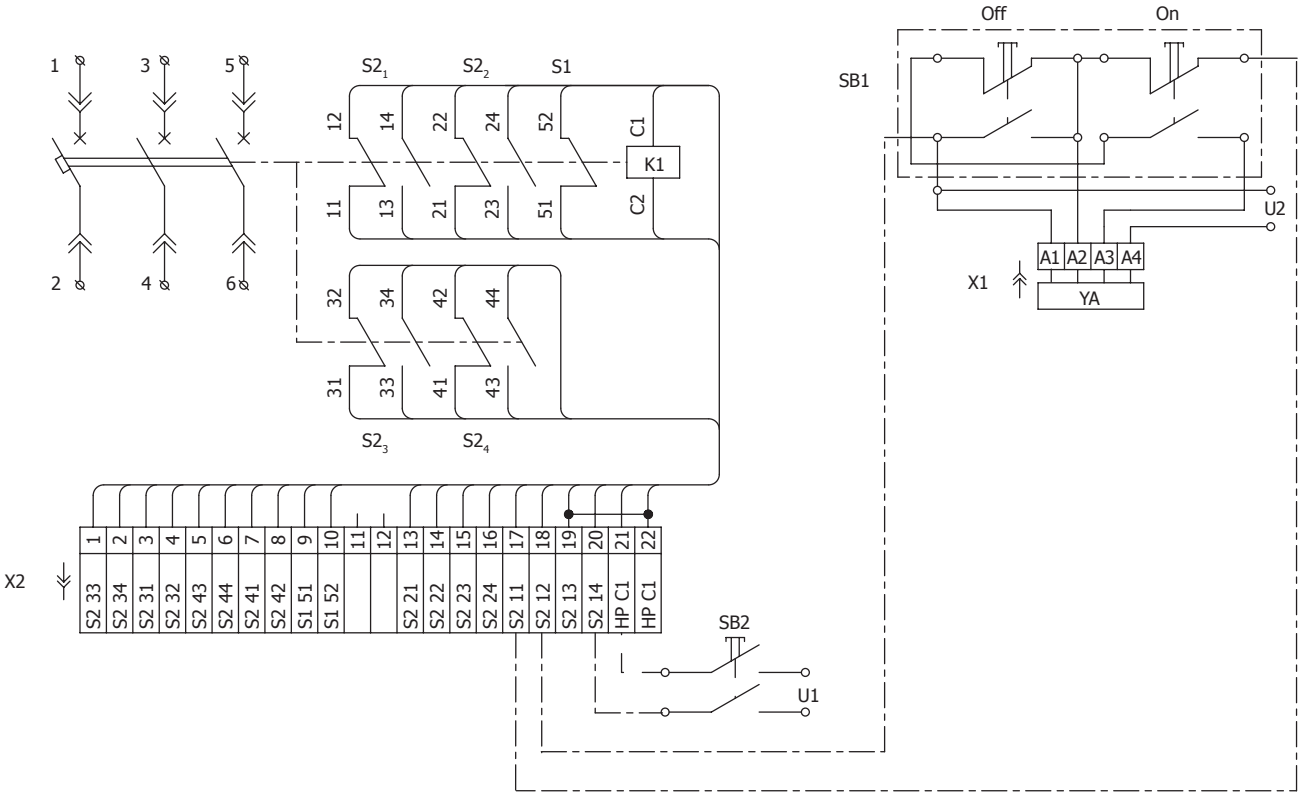

Electromagnetic drive

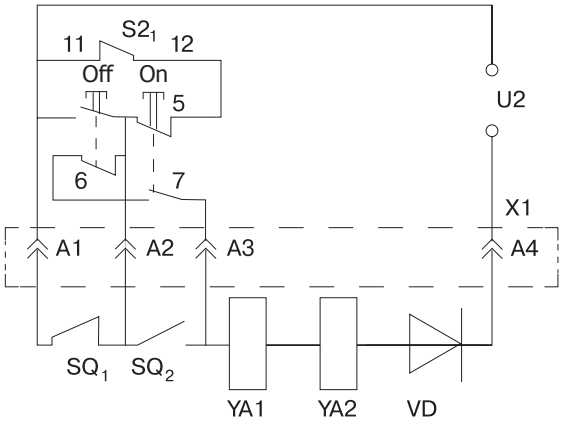

Minimum allowed distances from circuit breaker to the switchgear metal parts

VA53-41 and VA55-41 circuit breakers with the manual drive

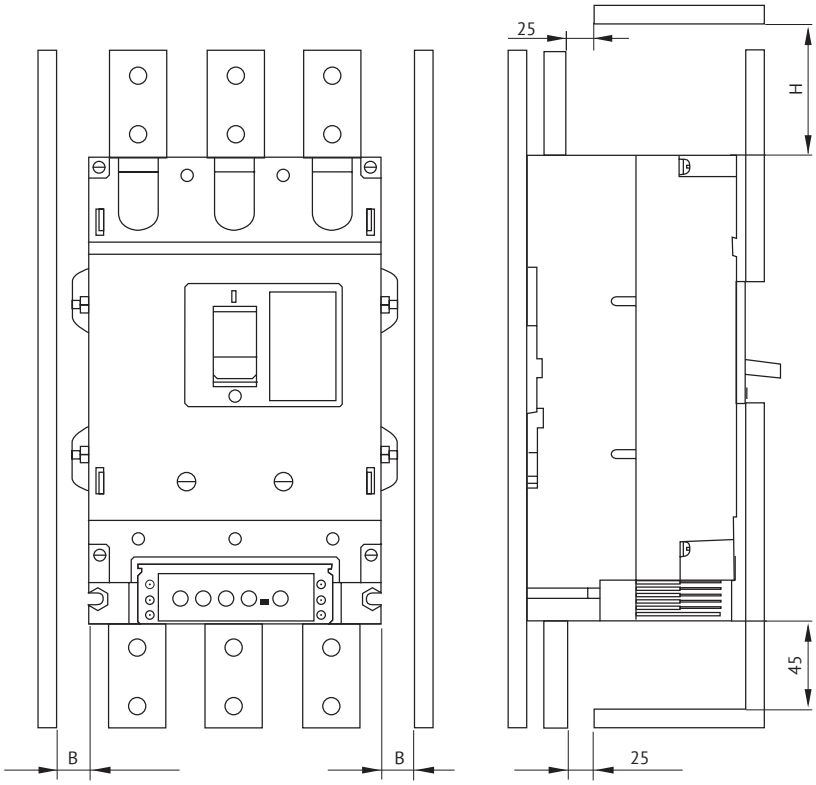

VA53-41 and VA55-41 circuit breakers with the EM drive

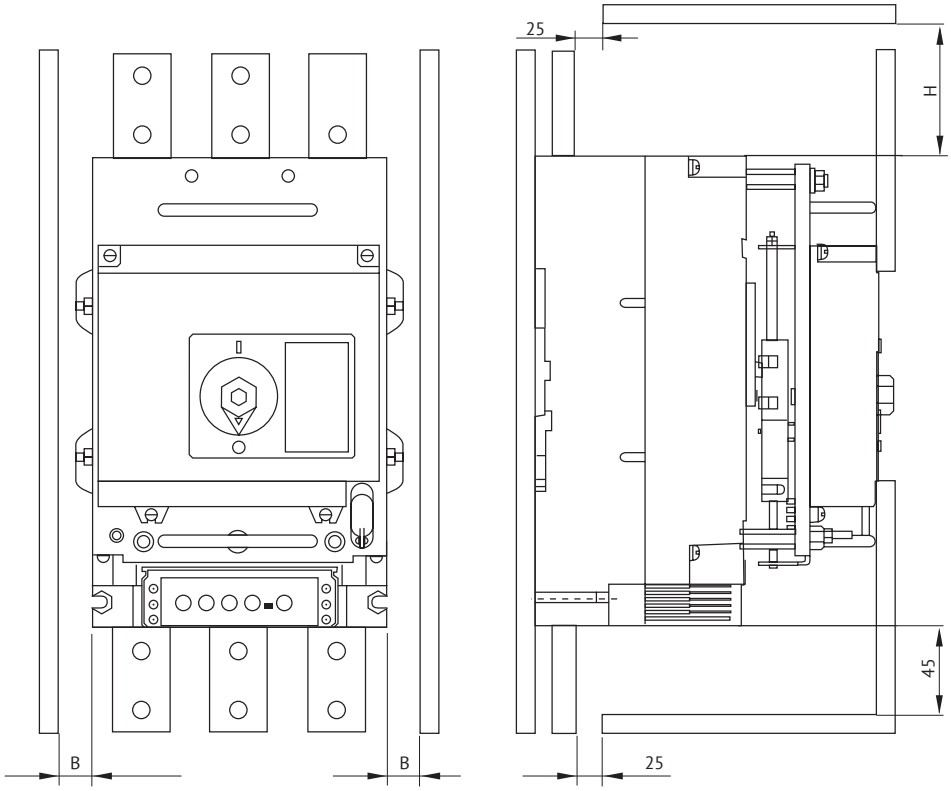

Rated voltage, V	Dimensions, mm	
	B	H
400	50	155
690	60	200

VA53-43 and VA55-43 circuit breakers with the manual drive

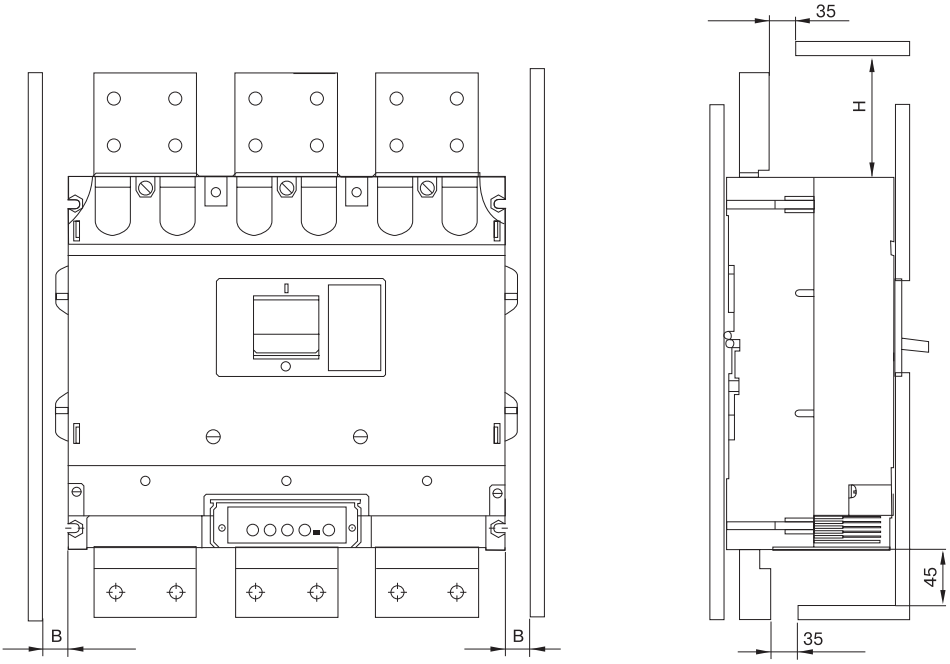

Номинальное напряжение, В	Размеры, мм	
	B	H
400	50	155
690	60	200

VA53-43 and VA55-43 circuit breakers with the EM drive

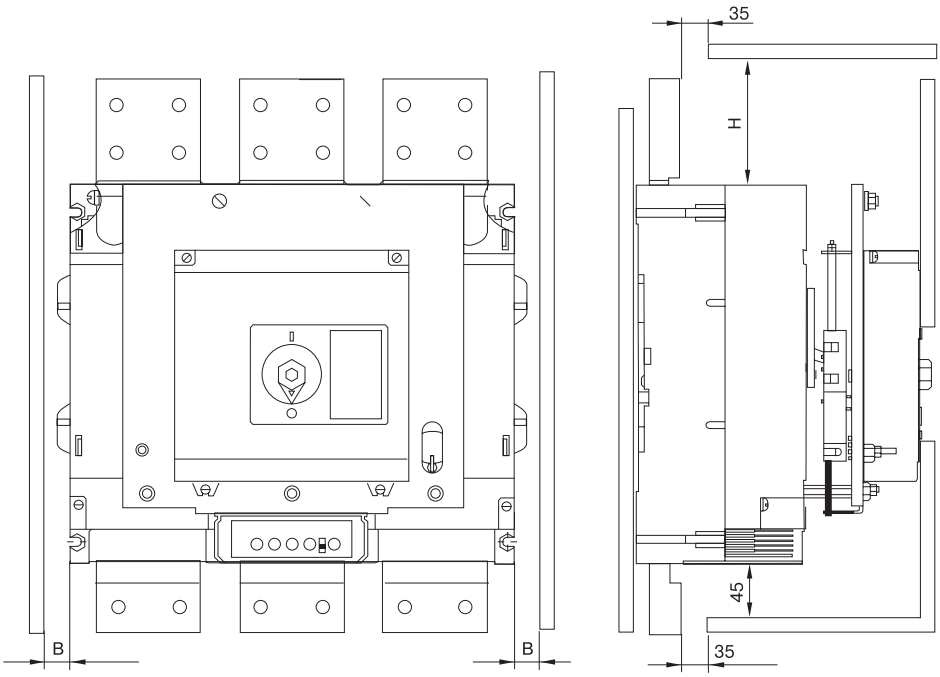

Rated voltage, V	Dimensions, mm	
	B	H
400	50	155
690	60	200

3 DISCONNECTOR SWITCHES, DISCONNECTORS, SWITCHES AND FUSES

Fuse disconnectors of RP series

TU3424-063-05758109-2012

Comply with the requirements of GOST R 50030.3

UP TO 1600 A | 500 V AC | 1kV | -60°C +40°C | warranty 3 years | IP00 | Cu | EAC

Designed to pass the rated currents of switching on and off, as well as infrequent (not more than 5 per hour) non-automatic switching of AC electrical circuits with a frequency of 50 Hz, voltage up to 500 V in electrical energy distribution devices.

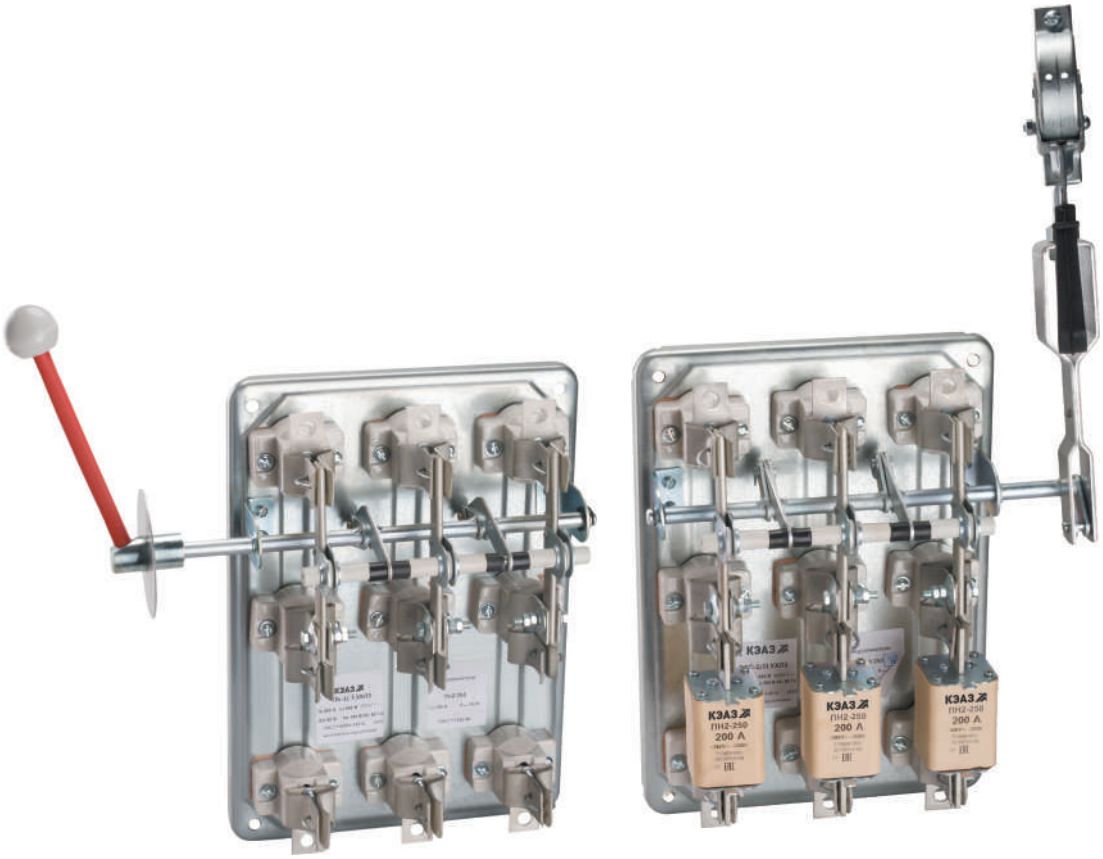

Benefits

- Implementation of any technical solutions
  - Full range of products for currents from 100 to 1600 A;
  - various types of manual drive.
- Ensuring reliable operation and safety of operation
  - knife-type contact system with visible open circuit;
  - use of fuses allows to organize protection against short circuit and overload;
  - current-carrying elements made of electrical copper of grade M1;
  - use of mechanically strong and non-burning plastic materials.
- Advanced applications
  - possibility of application in harsh environments - climatic modification UHL.

Design features

The necessary contact pressure is provided by the springs on the contact racks and spherical washers on the hinge racks.

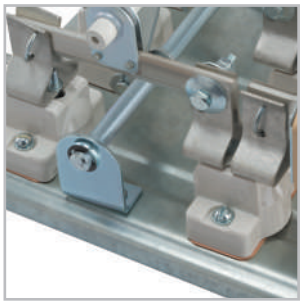

The main parts of the disconnector are knives, contact and axial racks mounted on a common plate. All threaded connections are protected from loosening.

The design of the disconnectors allows to install fuses of series PPN and PH2 (depending on the rated current).

Premix insulators provide high tracking resistance, durability and reliable insulation of live parts.

Designation structure

Fuse disconnector RP X_1-X_2X_3/2X_4-X_5...A-X_6X_7-UHL3-X_8-KEAZ

Fuse disconnector	- Product group
RP	- Series
X_1	- Type of manual drive: Б - lateral displaced handle; C - front displaced handle; Ц - central drive
X_2X_3	- Designation of conventional thermal current: 1 - 100 A; 2 - 250 A; 4 - 400 A; 6 - 630 A; 10 - 1000 A; 16 - 1600 A
2	- Shaft length - 205 mm
X_4	- Drive version: L - left; P - right
X_5...A	- Rated current, A: 100; 250; 400; 630; 1000; 1600
X_6X_7	- Completeness with fusible inserts: Without PV - without fusible inserts; PV - with fusible inserts
UHL3	- Climatic category and category of placement
X_8	- Type of acceptance: AES, PZ, REG
KEAZ	- Trademark

Example of the record of the designation of the Fuse disconnector with the front displaced handle, the left drive to the rated current 100 A, without fusible inserts, climatic category UHL3:
Fuse disconnector RPC-1/L-100A-Without PV-UHL3-KEAZ

Specifications

Parameter name / Typical version	RPS-1 RPB-1 RPC-1	RPS-2 RPB-2 RPC-2	RPS-4 RPB-4 RPC-4	RPS-6 RPB-6 RPC-6	RPS-10 RPB-10 RPC-10	RPS-16 RPB-16 RPC-16
Rated operating voltage, (U_e), V	380AC			500AC		
Rated current, (I_e), A	100	250	400	630	1000	1600
Rated frequency of alternating current, Hz	50 and 60					
Rated switching on and off capacity at voltage 1.05 U_e, power factor 0.95, at a current of 1.5 I_e, on/off cycles	10					
Rated conditional short-circuit current (I_{cc}), kA	20		30	32	50	
Built-in fuse links	PN2-100	PN2-250	PN2-400	PPN-39	PPN-41	PPN-41
Rated current of fuse links, A	100	250	400	630	1000	1601
Maximum power losses of fuse links, W	16	34	56	48	84	90
Wire and cable core cross-section, mm² - min	10	70	120	150	8x60 or 3x150	2 (8x60)
- max	50	150	3x120	4x120	2 (6x60) or 6 (3x120)	2 (10x60)
Rate operating mode	continuous					
Degree of protection	IP00					
Protection class against electric shock according to GOST 12.2.007.0	0					
Category of application in accordance with GOST P 50030.3	AC-20 V					
Mechanical wear resistance, on/off cycles, not less than	2500					

Item numbers

	Name	Rated current, A	Rated voltage, V	Rated conditional short circuit current, (I_{cc}), kA	Item number
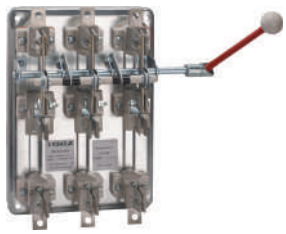	RPB-1L-100A-without PV-UZ	100	380	20	111457
	RPB-1P-100A-without PV-UZ	100	380	20	111458
	RPB-1P-100A-PV100A-UHL3	100	380	20	120032
	RPS-1L-100A-without PV-UZ	100	380	20	111465
	RPS-1L-100A-PV100A-UHL3	100	380	20	120028
	RPS-1P-100A-without PV-UZ	100	380	20	111466
	RPS-1P-100A-PV100A-UHL3	100	380	20	120022
	RPC-1-100A-without PV-UZ	100	380	20	111473
	RPB-2L-250A-without PV-UZ	250	380	20	111459
	RPB-2L-250A-PV250A-UHL3	250	380	20	120052
	RPB-2P-250A-without PV-UZ	250	380	20	111460
	RPB-2P-250A-PV250A-UHL3	250	380	20	120051
	RPS-2/2P-250A-PV250A-UHL3	250	380	20	120042
	RPS-2L-250A-without PV-UZ	250	380	20	111467
	RPS-2L-250A-PV100A-UHL3	250	380	20	120048
	RPS-2L-250A-PV160A-UHL3	250	380	20	120045
	RPS-2L-250A-PV250A-UHL3	250	380	20	120044
	RPS-2P-250A-without PV-UZ	250	380	20	111468
	RPS-2P-250A-PV160A-UHL3	250	380	20	120038
	RPS-2P-250A-PV200A-UHL3	250	380	20	120037
	RPS-2P-250A-PV250A-UHL3	250	380	20	120036
	RPC-2-250A-without PV-UZ	250	380	20	111474
	RPC-2-250A-PV250A-UHL3	250	380	20	120053
	RPB-4L-400A-without PV-UZ	400	380	30	111461
	RPB-4L-400A-PV400A-UHL3	400	380	30	120061
	RPB-4P-400A-without PV-UZ	400	380	30	111462
	RPB-4P-400A-PV400A-UHL3	400	380	30	120060

	Name	Rated current, A	Rated voltage, V	Rated conditional short circuit current, (I_{cc}), kA	Item number
	RPS-4/2L-400A-without PV-UHL3	400	380	30	120059
	RPS-4/2P-400A-without PV-UHL3	400	380	30	120057
	RPS-4L-400A-without PV-UZ	400	380	30	111469
	RPS-4L-400A-PV400A-UHL3	400	380	30	120058
	RPS-4P-400A-without PV-UZ	400	380	30	111470
	RPS-4P-400A-PV315A-UHL3	400	380	30	120056
	RPS-4P-400A-PV355A-UHL3	400	380	30	120055
	RPS-4P-400A-PV400A-UHL3	400	380	30	120054
	RPC-4-400A-without PV-UZ	400	380	30	111475
	RPC-4-400A-PV400A-UHL3	400	380	30	120062
	RPB-6L-630A-without PV-UZ	630	380	32	111463
	RPB-6L-630A-PV630A-UHL3	630	380	32	220028
	RPB-6P-630A-without PV-UZ	630	380	32	111464
	RPB-6P-630A-PV630A-UHL3	630	380	32	120067
	RPS-6L-630A-without PV-UZ	630	380	32	111471
	RPS-6L-630A-PV630A-UHL3	630	380	32	120066
	RPS-6P-630A-without PV-UZ	630	380	32	111472
	RPS-6P-630A-PV355A-UHL3	630	380	32	120065
	RPS-6P-630A-PV630A-UHL3	630	380	32	120063
	RPC-6-630A-without PV-UZ	630	380	32	111476
	RPC-6-630A-PV630A-UHL3	630	380	32	120069
	RPB-10P-1000A-without PV-UZ	1000	500	50	114081
	RPB-10P-1000A-PV1000A-UHL3	1000	500	50	120078
	RPB-10P-1000A-PV800A-UHL3	1000	500	50	120079
	RPS-10/2L-1000A-without PV-UHL3	1000	500	50	120077
	RPS-10/2L-1000A-PV1000A-UHL3	1000	500	50	120076
	RPS-10/2P-1000A-PV1000A-UHL3	1000	500	50	120073
	RPS-10L-1000A-without PV-UZ	1000	500	50	118305
	RPS-10L-1000A-PV1000A-UHL3	1000	500	50	120074
	RPS-10L-1000A-PV800A-UHL3	1000	500	50	120075
	RPS-10P-1000A-without PV-UZ	1000	500	50	118306
	RPS-10P-1000A-PV1000A-UHL3	1000	500	50	120070
	RPS-10P-1000A-PV630A-UHL3	1000	500	50	120072
	RPS-10P-1000A-PV800A-UHL3	1000	500	50	120071
	RPC-10-1000A-without PV-UHL3	1000	500	50	120081
	RPC-10-1000A-PV1000A-UHL3	1000	500	50	120082
	RPB-16P-1600A-PV1600A-UHL3	1600	500	50	120089
	RPS-16L-1600A-without PV-UHL3	1600	500	50	120087
	RPS-16L-1600A-PV1600A-UHL3	1600	500	50	120088
	RPS-16P-1600A-without PV-UHL3	1600	500	50	120083
	RPS-16P-1600A-PV1600A-UHL3	1600	380	50	120084

Delivery set

Name	RPS	RPB	RPC
Fuse disconnector	+	+	+
Fasteners for mounting external conductors	+	+	+
Operational documentation	+	+	+

Overall dimensions and weight

With displaced front handle

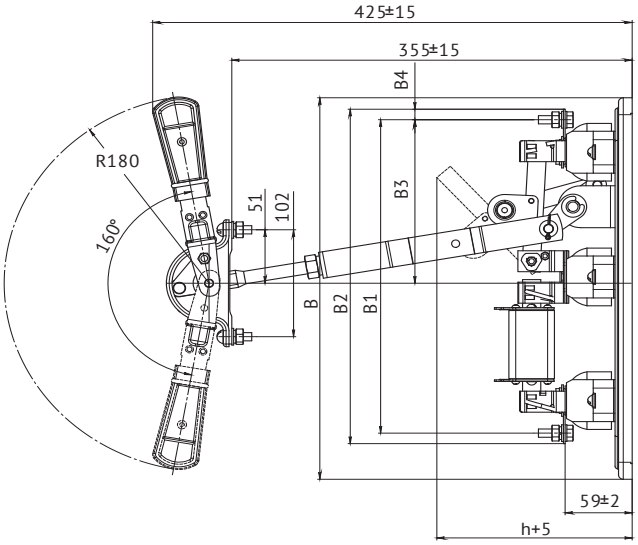

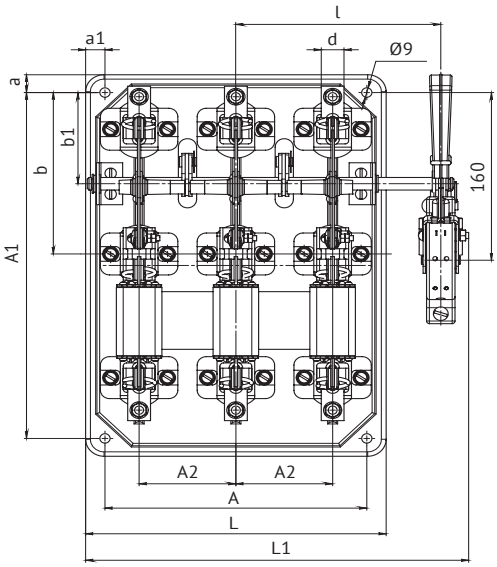

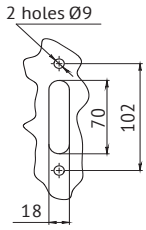

Holes in the shell to install the drive

Typical version	Dimention, mm																	Weight, not more, kg	
	A	A1	A2	a	a1	B	B1	B2	B3	B4	b	b1	d	h	L	L1	I	w/o fuse inserts	with fuse inserts
RPS-1							299	319	156	10	154			172				4	4.9
RPS-2	230	330	85	17	17	364	315	340	166.5	12.5	164	87	9	190	264	336.5	180	4.8	6.32
RPS-4							359	384	185	12.5	154			193				5.8	8.3
RPS-6	300	345	120	11.5	20	368	380.5	416.5	177	18	173	90		205	340	420	225	7.8	10.5

With displaced lateral handle

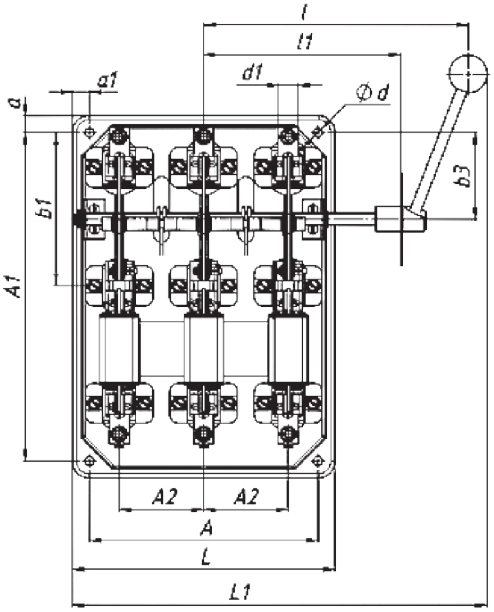

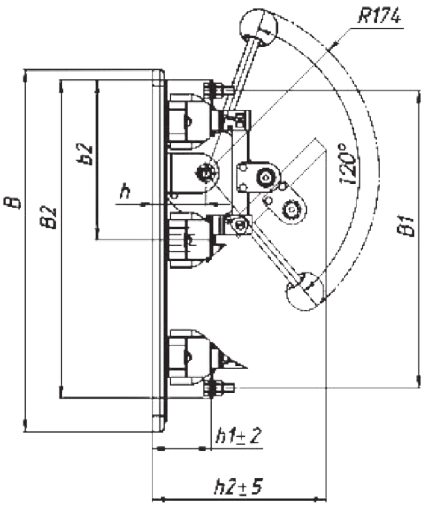

Holes in the shell for the installation of the lateral displaced handle

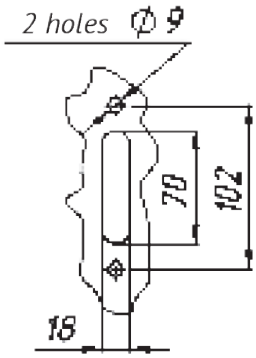

Typical version	Dimention, mm														Weight, kg
	A	A1	A2	L	L1	B	B1	B2	I	I1	b1	b2	d	d1	
RPB-1							299	319			154	160		20	4.9
RPB-2	230	330	85	264	336.5	364	315	340	180	197.5	164	170.5	9	25	7.51
RPB-4							359	384			154	179			9.2
RPB-6	300	345	120	380	439.5	368	380.5	416.5	225	242.5	173	184.5		35	11.05

With central drive for currents of 100 A, 250 A and 400 A

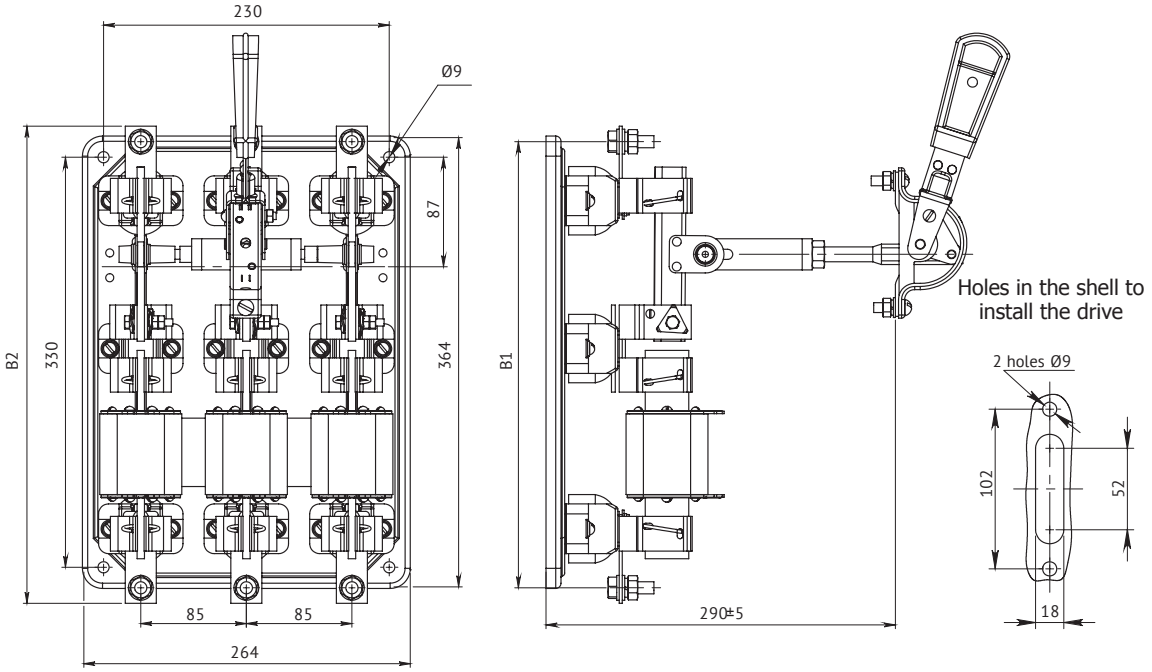

Typical version	Conditional heat current	Dimention, mm		Weight, kg
		B1	B2	
RPC-1	100	299	319	4,9
RPC-2	250	315	340	6,32
RPC-4	400	359	384	8,3

With central drive for current 630 A (RPC-6)

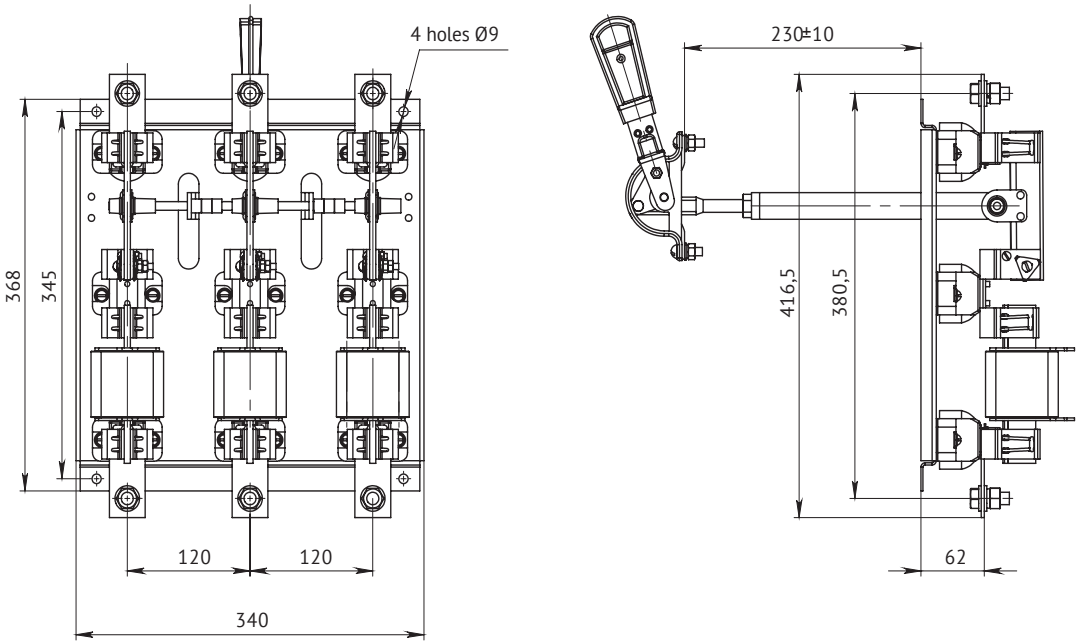

Mass, not more than - 10.5 kg

With the front displaced handle on the current 1000 A and 1600 A (RPS-10, RPS-16)

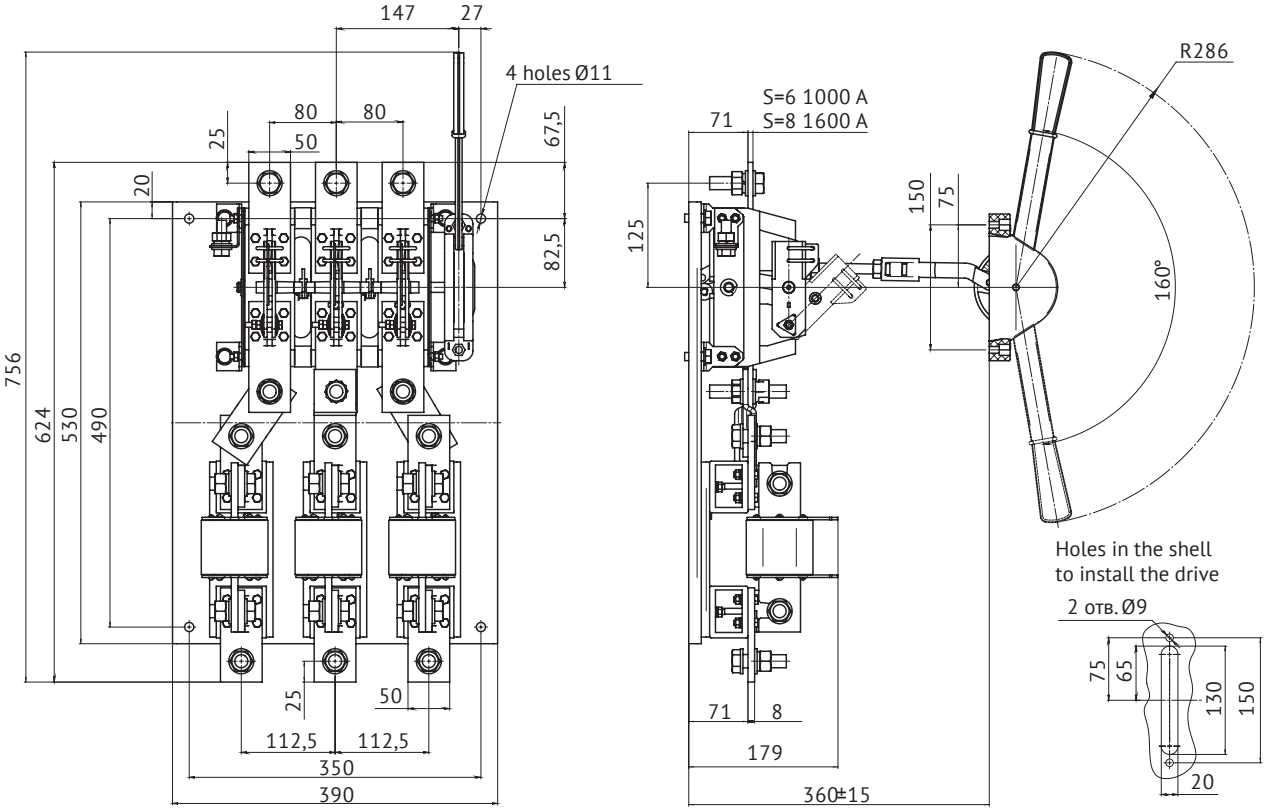

Weight, not more than: RPS-10 - 26.35 kg
RPS-16 - 29.3 kg

With the lateral displaced handle on the current 1000 A and 1600 A

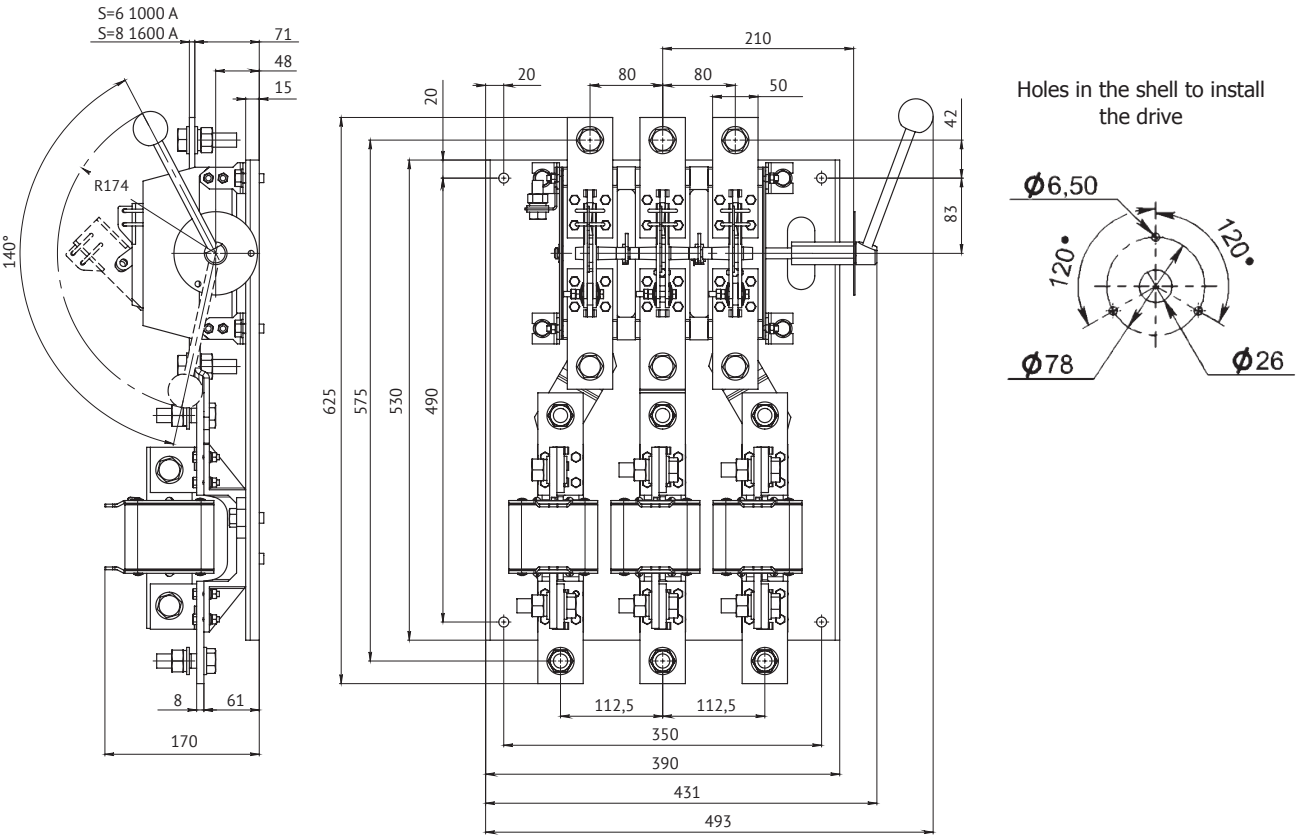

Weight, not more than: RPB-10 - 26.35 kg
RPB-16 - 29.3 kg

With the central drive on the current 1000 A and 1600 A (RPC-10, RPC-16)

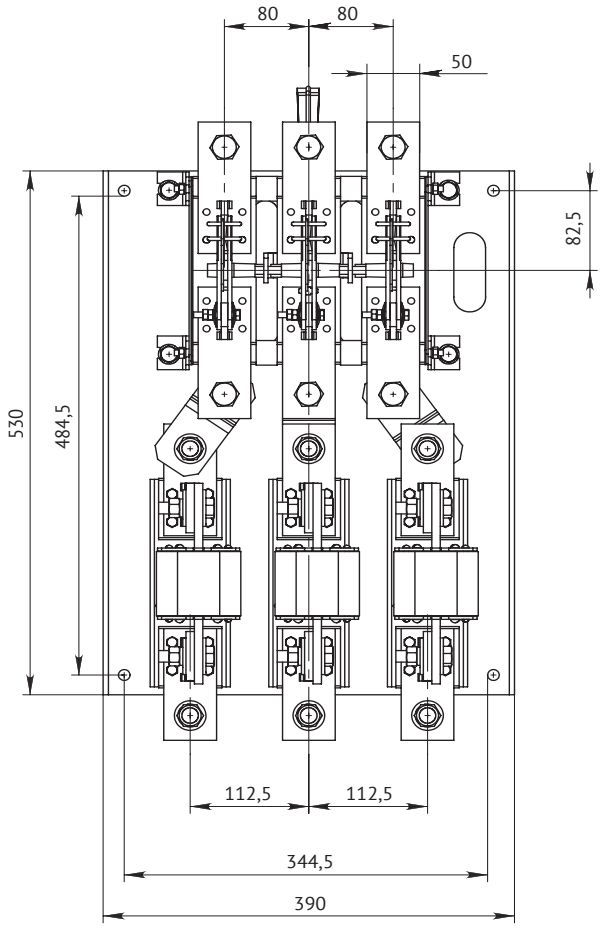

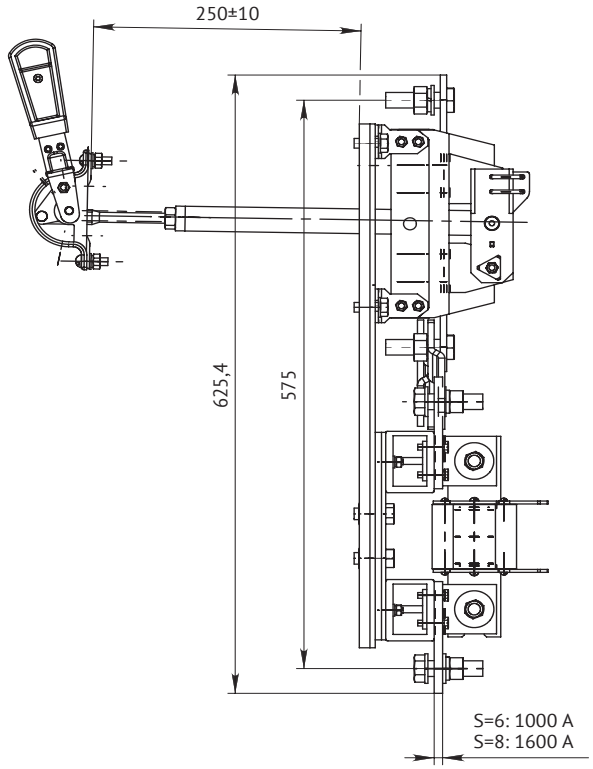

Weight, not more than: RPC-10 - 26.35 kg
RPC-16 - 29.3 kg

Disconnectors RE19

TU3424-063-05758109-2012

Comply with the requirements of GOST R 50030.3

UP TO 6300 A | 1000 V AC/DC | 1kV | -60°C +40°C | warranty 3 years | IP00 | Cu | EAC

Designed to pass the rated currents and infrequent (up to three times) non-automatic switching of electrical circuits without load with a rated voltage up to 1000 V AC at 50, 60 Hz and a rated voltage up to 1000 V DC in electrical power distribution devices.

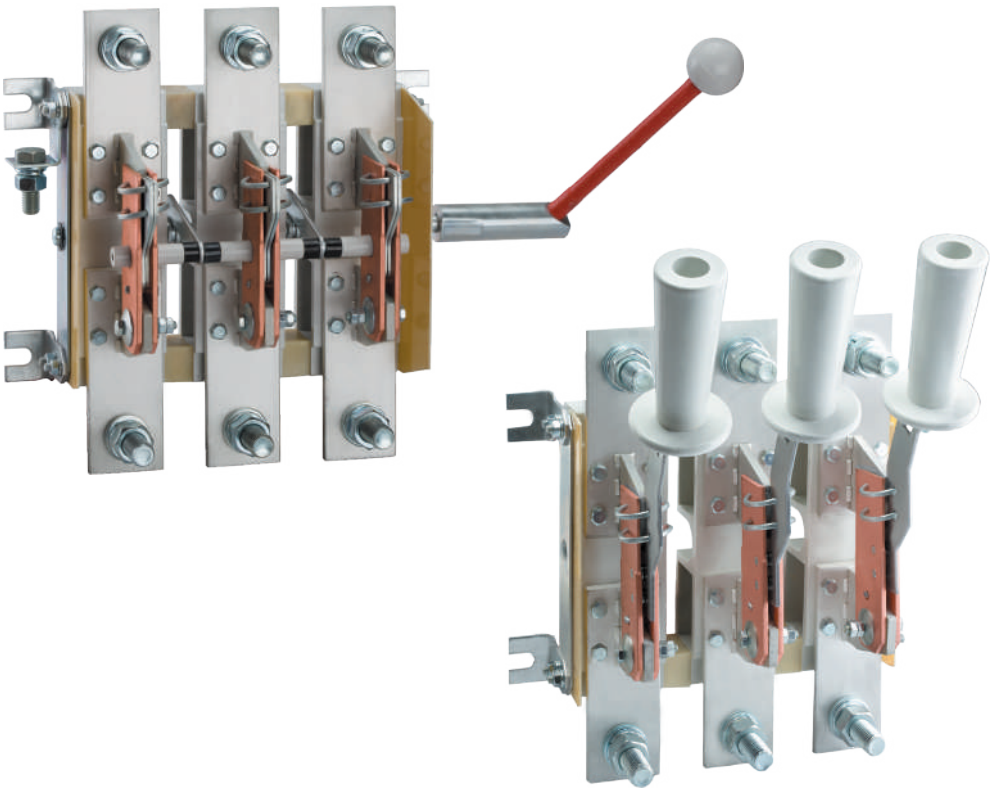

Benefits

- Implementation of any technical solutions
  - Full range of products for currents from 100 to 6300 A;
  - various types of manual drive;
  - various options for the location of contact pins for maximum ease of installation;
  - ability to install auxiliary contacts to signal the status of the device;
  - different number of poles and inter-pole distance.
- Ensuring reliable operation and safety of operation
  - knife-type contact system with visible open circuit;
  - current-carrying elements made of electrical copper of grade M1;
  - use of mechanically strong and non-burning plastic materials.
- Advanced applications
  - possibility of application in harsh environments - climatic modification UHL and T.

Design features

The knife-type contact system provides a visible open circuit.

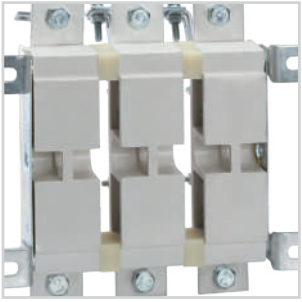

The base is made of durable non-burning materials.

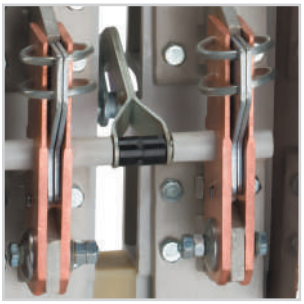

Contact leads are made of high quality electrical copper with a protective coating.

Designation structure

Disconnector switch RE19-X_1X_2-$X_3X_4X_5X_6X_7$-X_8...A-IR-L-MP$X_9X_{10}X_{11}$-X_{12}-X_{13}-KEAZ

Disconnector switch	- Product group
RE19	- Series
X_1X_2	- Designation of conventional thermal current: 31 - 100 A; 35 - 250 A; 37 - 400 A; 39 - 630 A; 41 - 1000 A; 43 - 1600 A; 44 - 2000 A; 45 - 2500 A; 46 - 3150 A; 47 - 4000 A; 49 - 6300 A
X_3	- Number of poles and number of directions: 1 - single pole in one direction; 2 - bipolar in one direction; 3 - tripolar in one direction; 5 - single pole in two directions; 6 - bipolar in two directions; 7 - tripolar in two directions
X_4	- Type of connection of external conductors to contact outputs: 1 - parallel to the mounting plane; 2 - perpendicular to the mounting plane
X_5	- Location of the plane of attachment of external clips: 1 - front; 2 - rear
X_6	- Type of manual drive: 1 - central handle; 2 - side handle; 4 - front offset handle; 5 - side offset handle; 6 - lever for bar pole operation; 7 - handle for pole operation; 9 - central lever for control of a bar
X_7	- Auxiliary contacts: 0 - absence; 1 - presence
X_8...A	- Rated current, A: 100; 250; 400; 630; 1000; 1600; 2000; 2500; 3150; 4000; 6300
IR	- Version on an insulating plate
L	- Drive version on the left (basic version is equipped with a drive on the right)
MP$X_9X_{10}X_{11}$	- Inter-pole distance other than 80 mm: MP105; MP120; MP130; MP140; MP160; MP175; MP180; MP185
X_{12}	- Climatic category and category of placement: UHL3 or T3
X_{13}	- Type of acceptance: AES, PZ, REG
KEAZ	- Trademark

Example of a record of the designation of a disconnector switch for a conditional thermal current of 630 A, tripolar with front connection of external conductors by buses, parallel to the mounting plane, with a right hand drive side handle located on the side of the device and installed at the end of the drive shaft, with auxiliary contacts, climatic design UHL3: Disconnector switch RE19-39-31121-630A-UHL3-KEAZ

Specifications

Parameter name / Typical version	RE19-31	RE19-35	RE19-37	RE19-39	RE19-41	RE19-43	RE19-44	RE19-45	RE19-46	RE19-47	RE19-49
Rated current (I_e), A	100	250	400	630	1000	1600	2000	2500	3150	4000	6300
Rated operating voltage (U_e), V	660 AC, 440 DC			1000 AC, 440 DC							
Rated short-time withstand current, kA	3	8	17	17	18	20	30	30	40	48	76
Rated conditional short circuit current, kA	6	14	26	32	100	100	100	100	100	100	110
Mechanical wear resistance, onn/off cycles	25000	10000			6300		4000				
Cross-section of conductors of external wires, cables and buses, mm											
Min	10	70	120	150	8x60 or 3x150	2 (8x60)	2 (8x80)	2 (10x80)	2 (8x100)	2 (10x100)	4 (10x100)
Max	50	150	3x120	4x120	2 (6x60) or 6 (3x120)	2 (10x60)	4 (8x80)	2 (10x120)	4 (8x100)	4 (10x120)	4 (10x120)
Category of use	AC-20, DC-20										

Item numbers

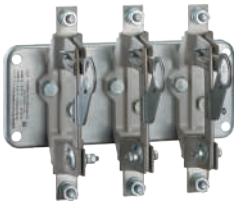

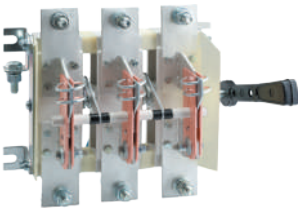

Name	Number of poles	Rated current, A	Rated short-time withstand current, kA	Rated operating voltage, V	Item number
RE19-31-31150-100A-UHL3	3	100	3	660	113002
RE19-35-31120-250A-UHL3	3	250	8	660	119563
RE19-35-31140-250A-UHL3	3	250	8	660	113005
RE19-35-31160-250A-UHL3	3	250	8	660	119569
RE19-37-11110-400A-UHL3	1	400	17	660	119574
RE19-37-11160-400A-UHL3	1	400	17	660	119575
RE19-37-31110-400A-UHL3	3	400	17	660	114256
RE19-37-31120-400A-UHL3	3	400	17	660	113007
RE19-37-31140-400A-UHL3	3	400	17	660	113008
RE19-37-31160-400A-UHL3	3	400	17	1000	114080
RE19-39-31110-630A-UHL3	3	630	17	1000	113010
RE19-39-31120-630A-L-UHL3	3	630	17	1000	116616
RE19-39-31120-630A-UHL3	3	630	17	1000	113011
RE19-39-31140-630A-L-UHL3	3	630	17	1000	115398
RE19-39-31140-630A-UHL3	3	630	17	1000	113012
RE19-39-31141-630A-L-UHL3	3	630	17	1000	119617
RE19-39-31150-630A-UHL3	3	630	17	1000	119618
RE19-39-31160-630A-UHL3	3	630	17	1000	113013
RE19-39-31161-630A-UHL3	3	630	17	1000	119623
RE19-39-31190-630A-UHL3	3	630	17	1000	113009
RE19-41-11160-1000A-UHL3	1	1000	18	1000	113025
RE19-41-31110-1000A-UHL3	3	1000	18	1000	113027
RE19-41-31120-1000A-UHL3	3	1000	18	1000	113014
RE19-41-31140-1000A-L-UHL3	3	1000	18	1000	115320
RE19-41-31140-1000A-UHL3	3	1000	18	1000	113019
RE19-41-31150-1000A-L-UHL3	3	1000	18	1000	119665
RE19-41-31150-1000A-UHL3	3	1000	18	1000	113016
RE19-41-31160-1000A-UHL3	3	1000	18	1000	113023
RE19-41-31170-1000A-UHL3	3	1000	18	1000	113031
RE19-41-31190-1000A-UHL3	3	1000	18	1000	113032
RE19-41-72210-1000A-IR-UHL3	3	1000	18	1000	113036
RE19-41-72220-1000A-IR-UHL3	3	1000	18	1000	136921
RE19-41-72250-1000A-IR-UHL3	3	1000	18	1000	119746

	Name	Number of poles	Rated current, A	Rated short-time withstand current, kA	Rated operating voltage, V	Item number
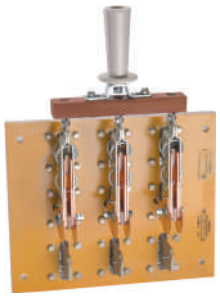	RE19-43-11160-1600A-UHL3	1	1600	20	1000	113061
	RE19-43-31110-1600A-UHL3	3	1600	20	1000	113067
	RE19-43-31120-1600A-UHL3	3	1600	20	1000	113042
	RE19-43-31140-1600A-L-UHL3	3	1600	20	1000	115321
	RE19-43-31140-1600A-UHL3	3	1600	20	1000	113056
	RE19-43-31150-1600A-PL-UHL3 (technical assignment)	3	1600	20	1000	232360
	RE19-43-31160-1600A-UHL3	3	1600	20	1000	113059
	RE19-43-72210-1600A-IP-UHL3	3	1600	20	1000	113077
	RE19-44-11160-2000A-UHL3	1	2000	30	1000	113084
	RE19-44-31120-2000A-IP-UHL3	3	2000	30	1000	113087
	RE19-44-31160-2000A-IP-MP140-UHL3	3	2000	30	1000	119868
	RE19-44-31160-2000A-IP-UHL3	3	2000	30	1000	113086
	RE19-45-11160-2500A-UHL3	1	2500	30	1000	113096
	RE19-45-31120-2500A-IP-UHL3	3	2500	30	1000	119910
	RE19-45-31160-2500A-IP-UHL3	3	2500	30	1000	113097
	RE19-46-11160-3150A-UHL3	1	3150	40	1000	113112
	RE19-46-31160-3150A-IP-UHL3	3	3150	40	1000	113113

*The complete list of all versions of RE19 switches can be found at www.keaz.ru

Delivery set

Name	RE19-31	RE19-35	RE19-37	RE19-39	RE19-41	RE19-43	RE19-44	RE19-45	RE19-46	RE19-47	RE19-49
Disconnecting switch	+	+	+	+	+	+	+	+	+	+	+
Fasteners for mounting a disconnector	+	+	+	+	+	+	+	+	+	+	+
Operational documentation	+	+	+	+	+	+	+	+	+	+	+

Overall, installation and mounting dimensions

Disconnector RE19-31-31120-100A-UHL3 tripolar with side handle, front busbar attachment

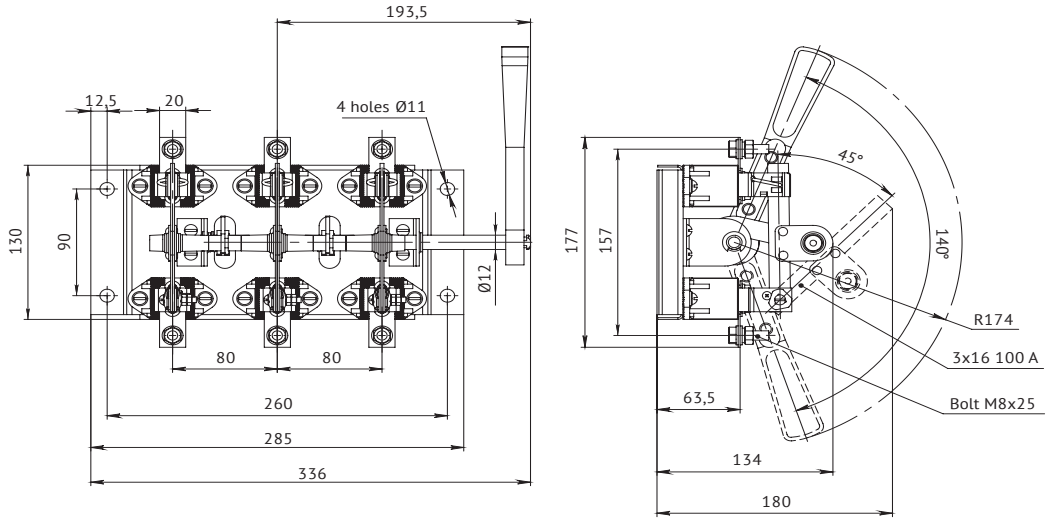

Weight, kg - 2,7

Disconnector RE19-35(37)-31110-250A(400A)-UHL3 tripolar with central handle, front busbar attachment

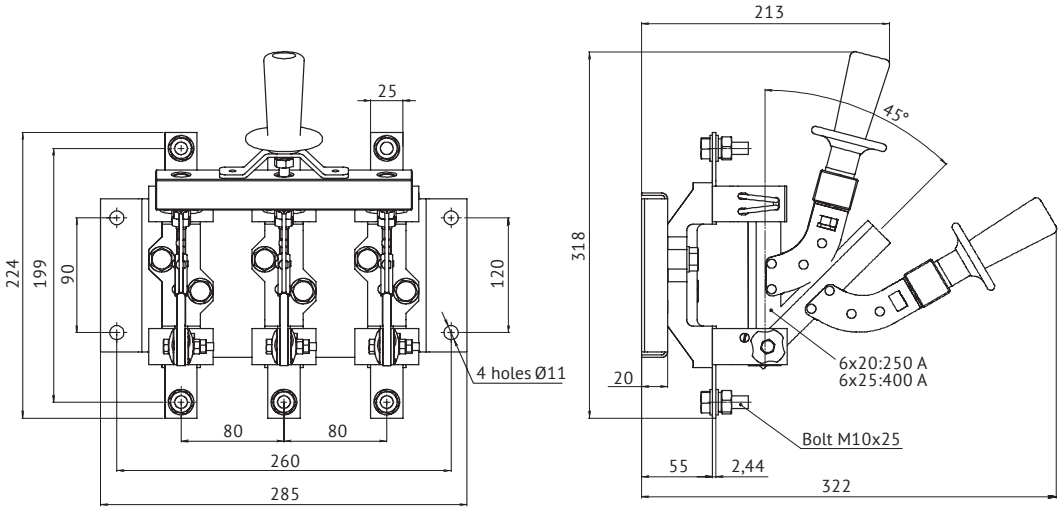

Weight, kg - 2,6

Disconnector RE19-35(37)-31190-250A(400A)-UHL3 tripolar with central lever for bar control, front busbar attachment

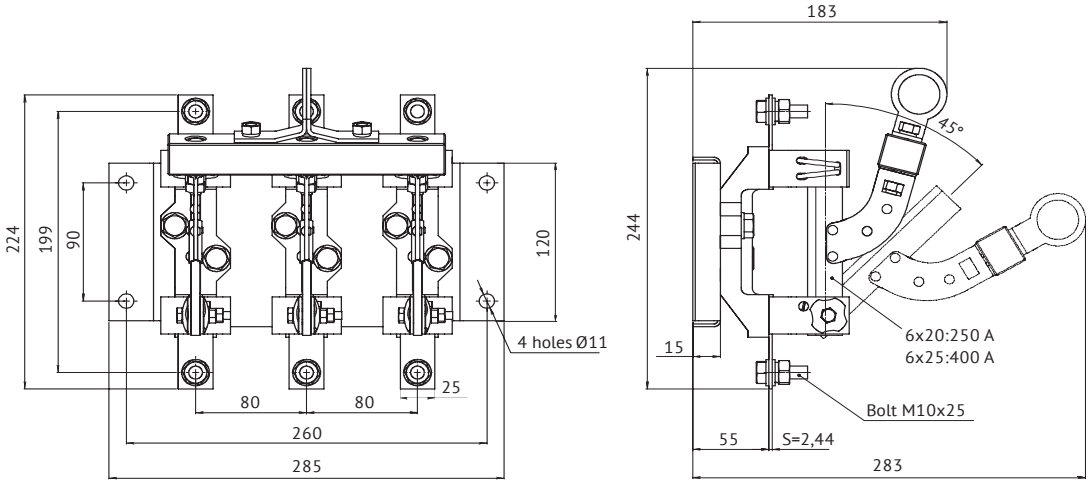

Weight, kg - 3,1

Disconnector RE19-35(37)-31170-250A(400A)-UHL3 tripolar with handle for polar operation, front busbar attachment

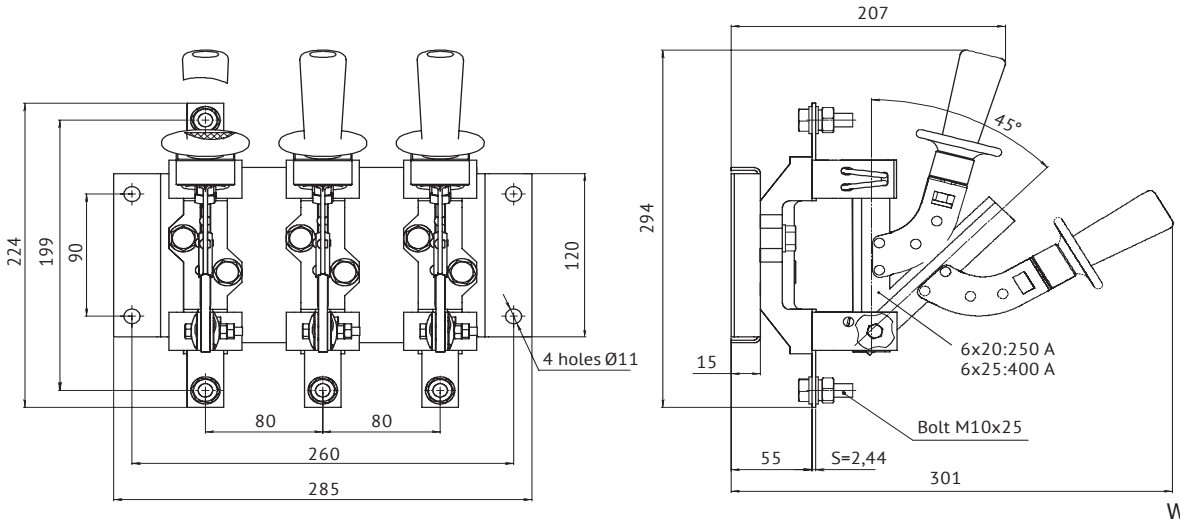

Weight, kg - 3,2

Disconnector RE19-35(37)-31160-250A(400A)-UHL3 tripolar with lever for bar polar operation, front busbar attachment

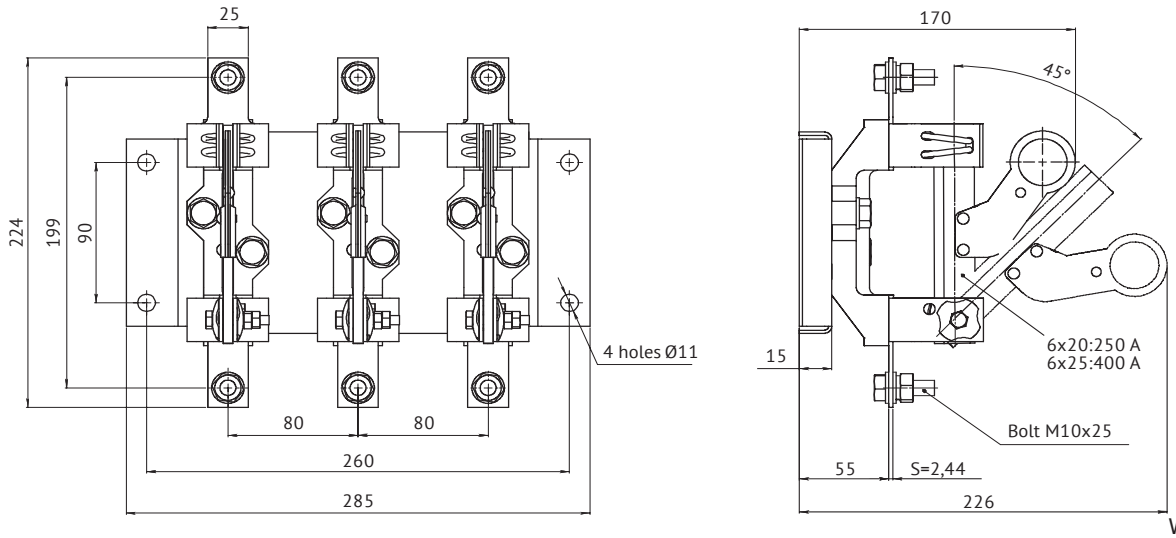

Weight, kg - 3,1

Disconnector RE19-35(37)-31120-250A(400A)-UHL3 tripolar with side handle, front busbar attachment

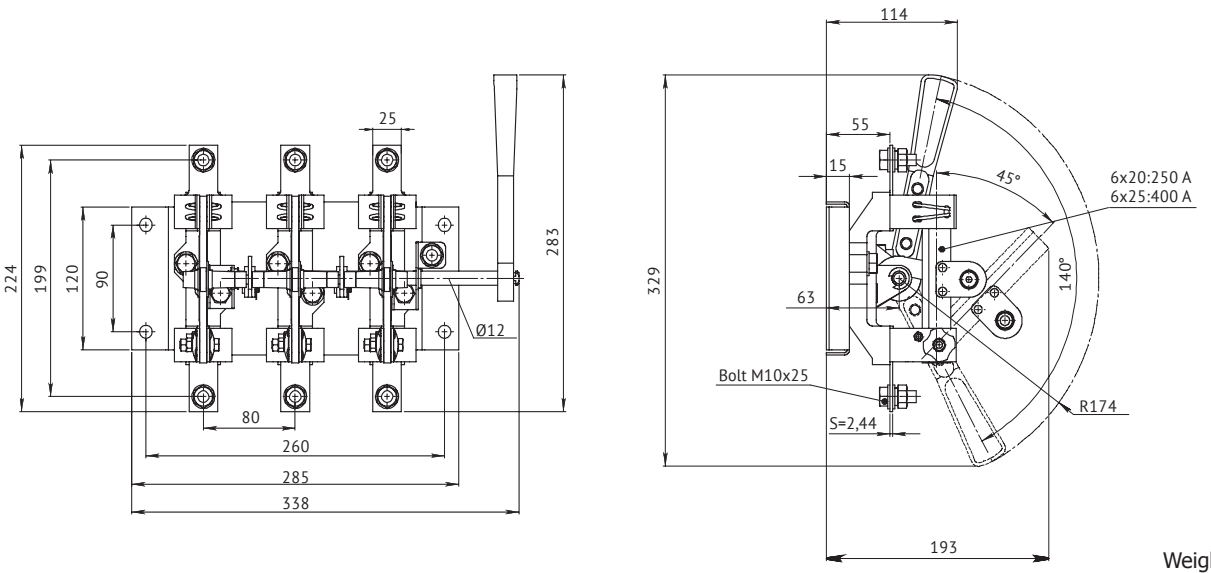

Weight, kg - 3,7

Disconnector RE19-35(37)-31140-250A(400A)-UHL3 tripolar with front displaced handle, front busbar attachment

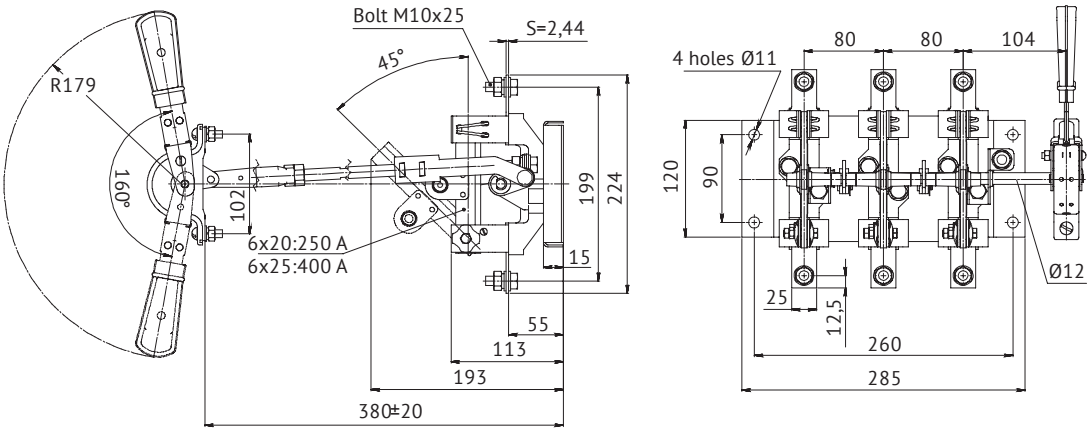

Marking of holes for the installation of the drive

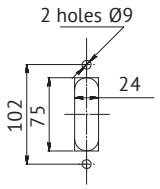

Weight, kg - 4,4

Disconnector RE19-39-31190-630A-UHL3 tripolar with central lever for bar control, front busbar attachment

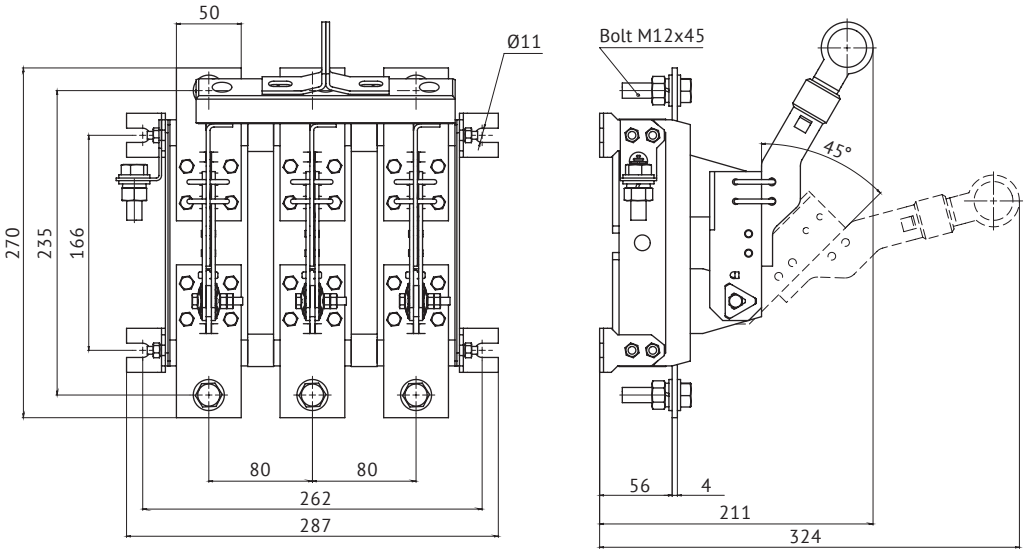

Weight, kg - 6

Disconnector RE19-39-31120-630A-UHL3 tripolar with side handle, front busbar attachment

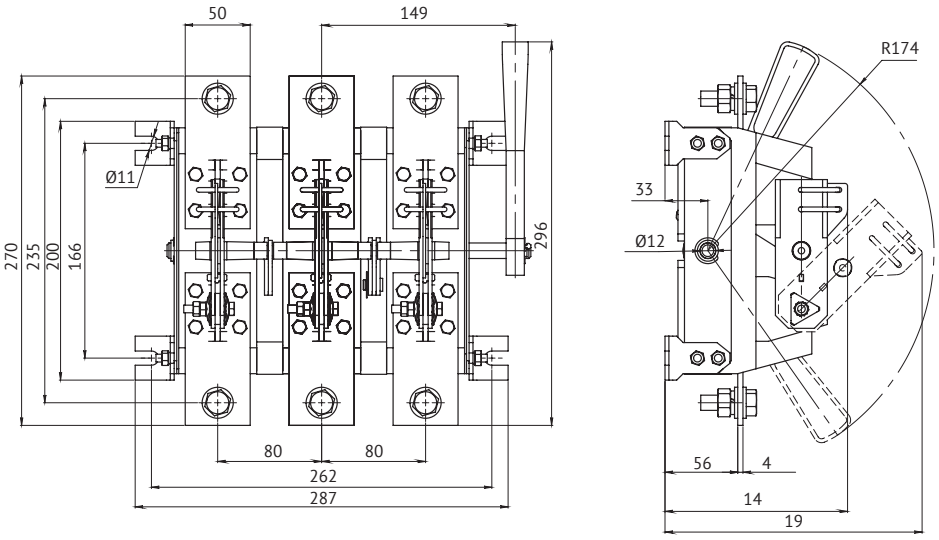

Weight, kg - 7,1

Disconnector RE19-39-31140-630A-UHL3 tripolar with front displaced handle, front busbar attachment

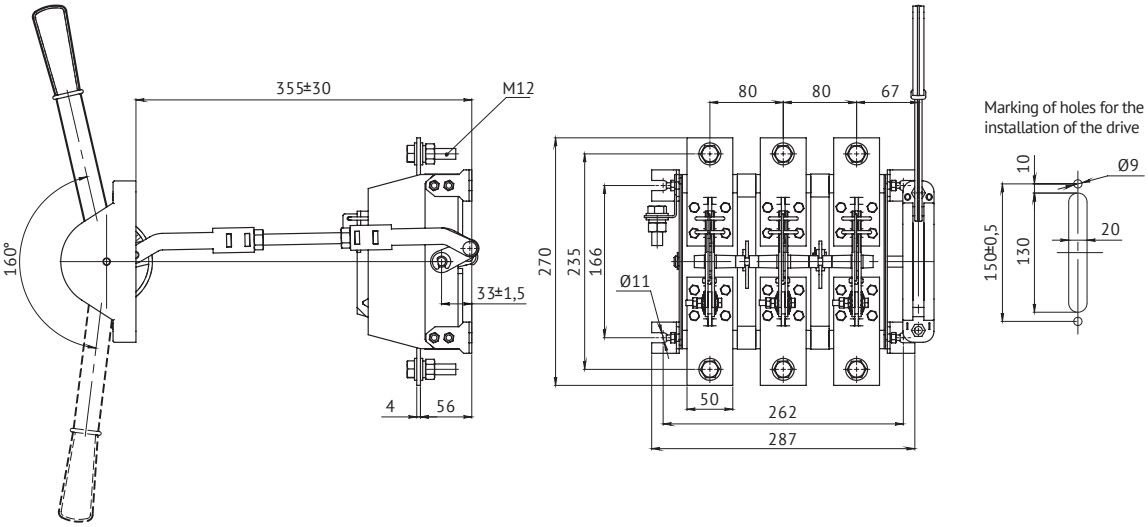

Weight, kg - 6,8

Disconnector RE19 bipolar with handle for polar operation, front busbar attachment on the insulation board

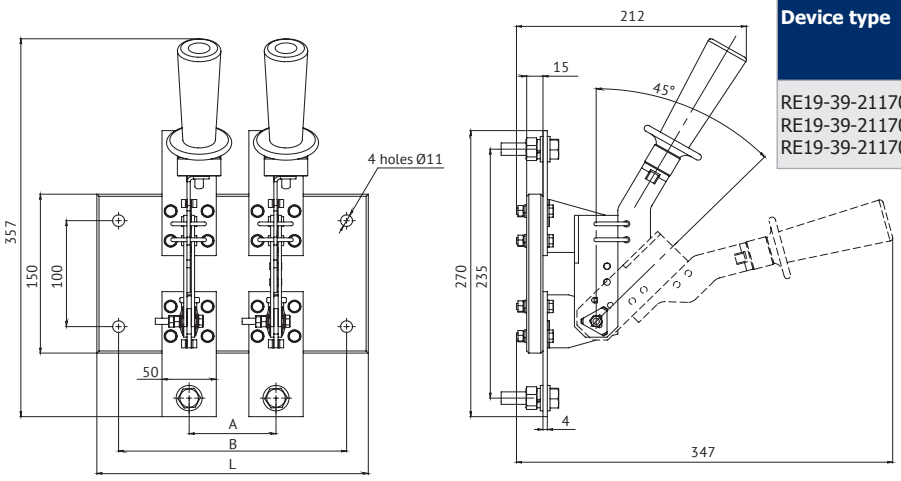

Device type	Rated current, A	Dimention, mm			Number of poles
		A	B	L	
RE19-39-21170-630A-UHL3	630	80	210	250	2
RE19-39-21170-630A-MP105-UHL3		105	235	275	2
RE19-39-21170-630A-MP130-UHL3		130	260	300	2

Weight, kg - 2,5

Disconnector RE19 tripolar with central handle, front busbar attachment on the insulation board

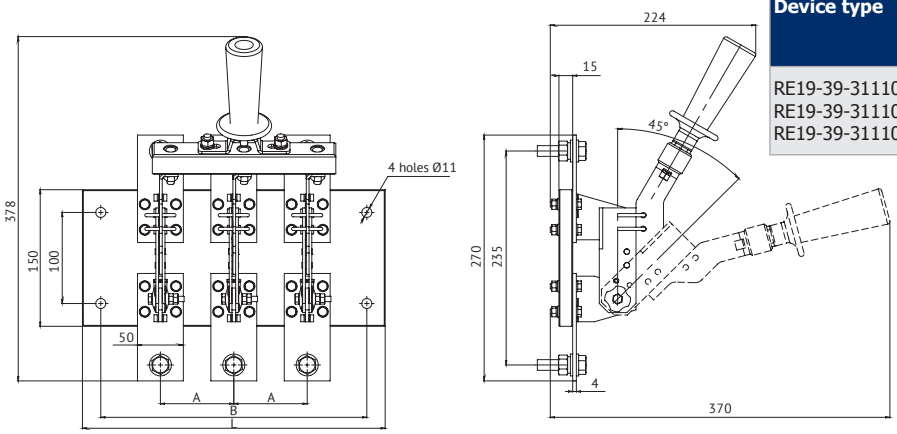

Device type	Rated current, A	Dimention, mm			Number of poles
		A	B	L	
RE19-39-31110-630A-UHL3	630	80	290	330	3
RE19-39-31110-630A-MP105-UHL3		105	340	380	3
RE19-39-31110-630A-MP130-UHL3		130	390	430	3

Weight, kg - 6,8

Disconnector RE19-41(43)-31120-1000A(1600A)-UHL3 tripolar with side handle, front busbar attachment

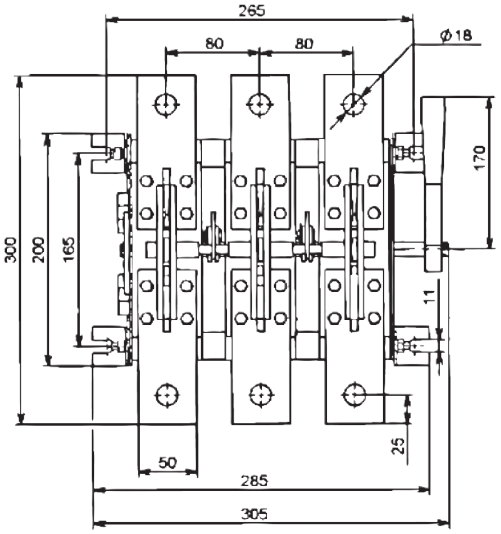

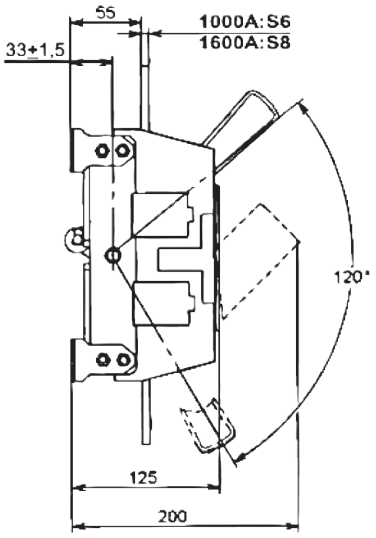

Weight, kg - 8

Disconnector RE19-41(43)-31140-1000A(1600A)-UHL3 tripolar with front displaced handle, front busbar attachment

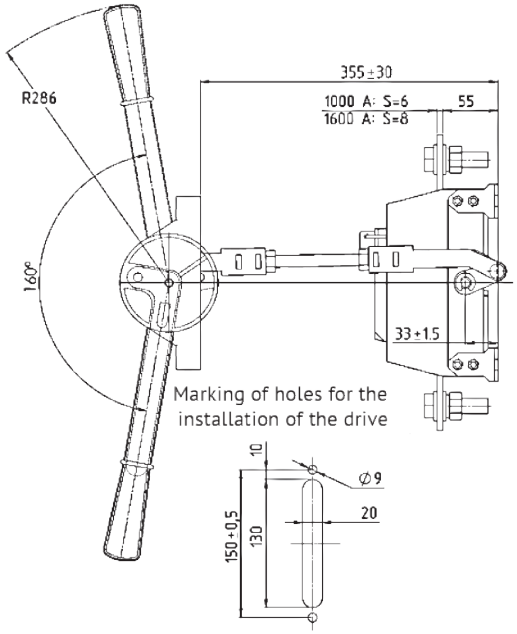

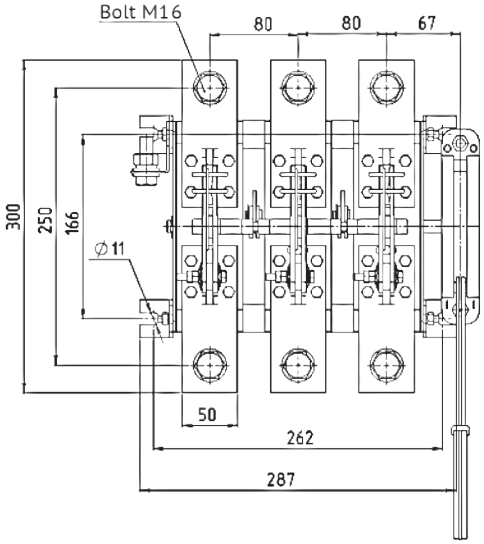

Weight, kg - 8,7

Disconnector RE19-41(43)-32220-1000A(1600A)-UHL3 tripolar with side handle, rear busbar attachment

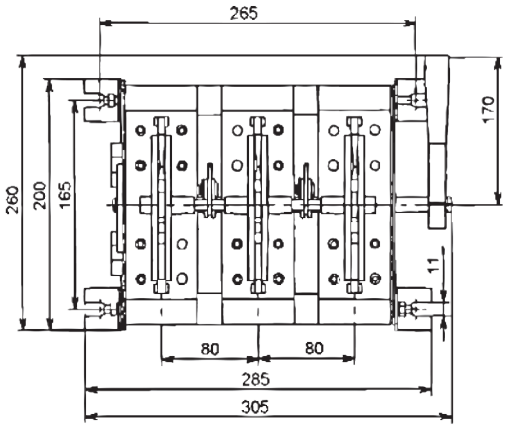

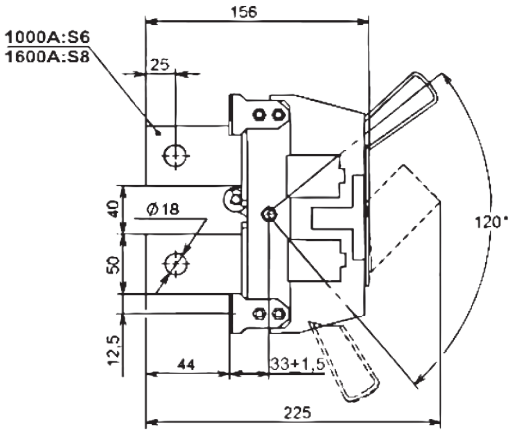

Weight, kg - 7

Disconnector RE19-41(43)-32240-1000A(1600A)-UHL3 tripolar with front displaced handle, rear busbar attachment

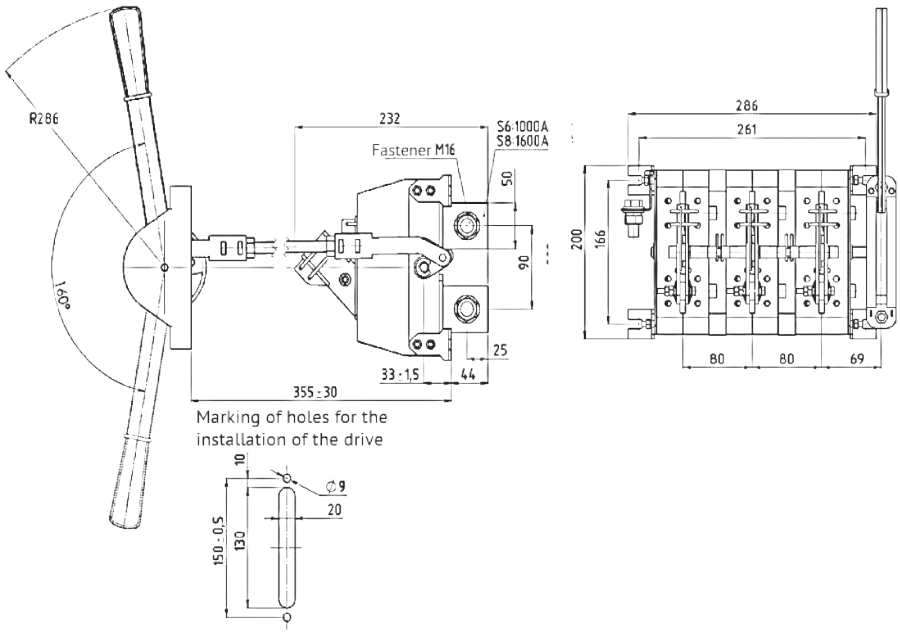

Weight, kg - 8,6

Disconnector RE19-41(43)-31150-1000A(1600A)-UHL3 tripolar with side displaced handle, front busbar attachment

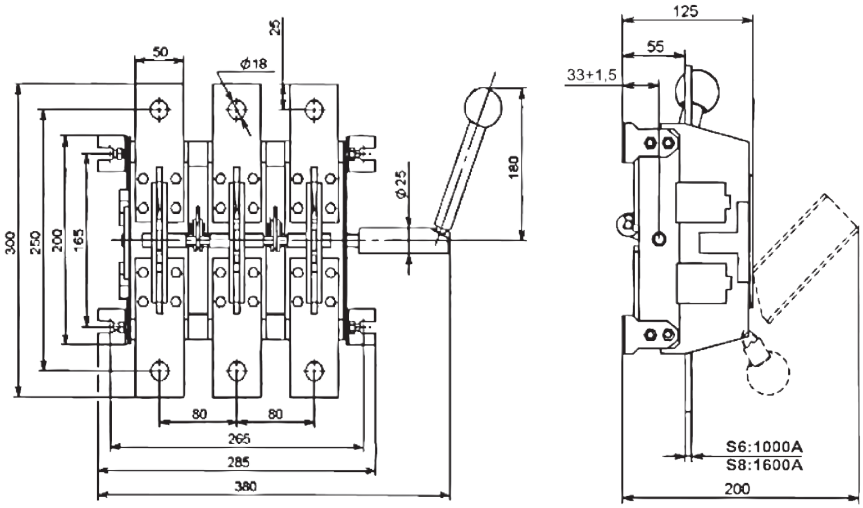

Weight, kg - 9

Disconnector RE19-41(43)-1(2,3)1160-1000A(1600A)-UHL3 with lever for bar polar operation, front busbar attachment

a) single pole; b) bipolar; c) tripolar

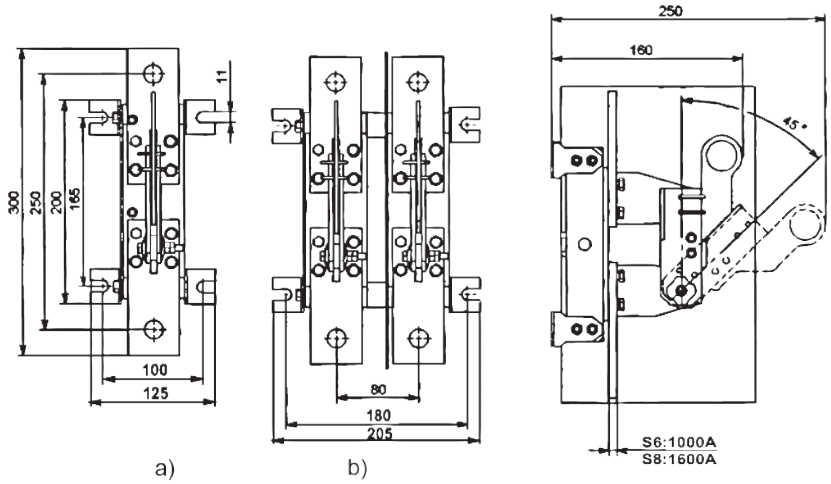

Weight of the single pole, kg - 3
Weight of the bipolar, kg - 6.5

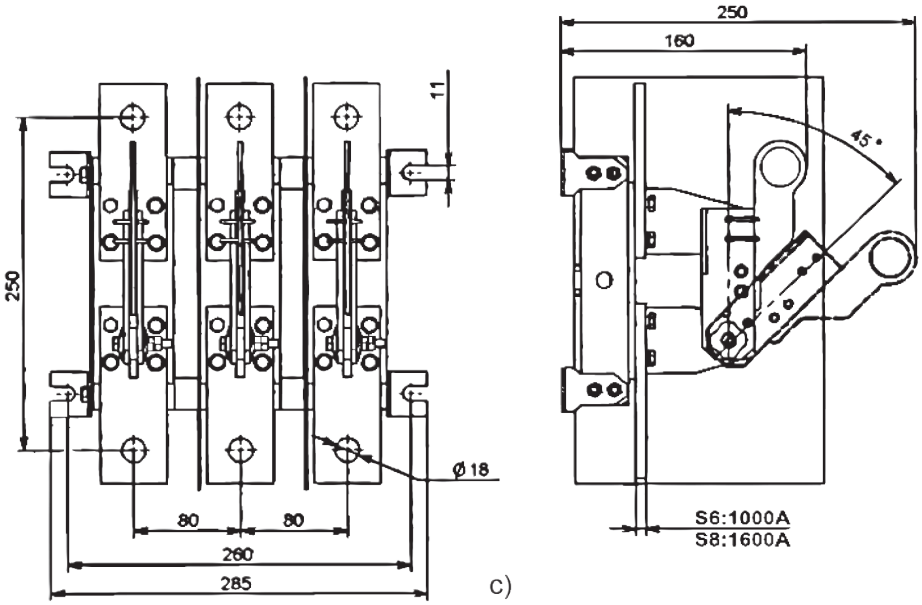

c)

Weight, kg - 8,7

Disconnector RE19-41(43)-1(2,3)2260-1000A(1600A)-UHL3 with lever for bar polar operation, rear busbar attachment

a) single pole; b) bipolar; c) tripolar

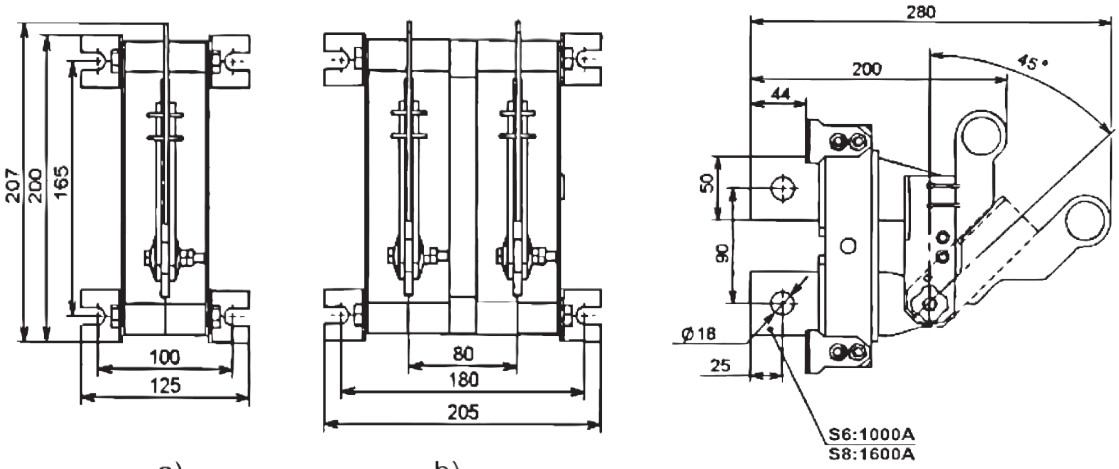

a) b)

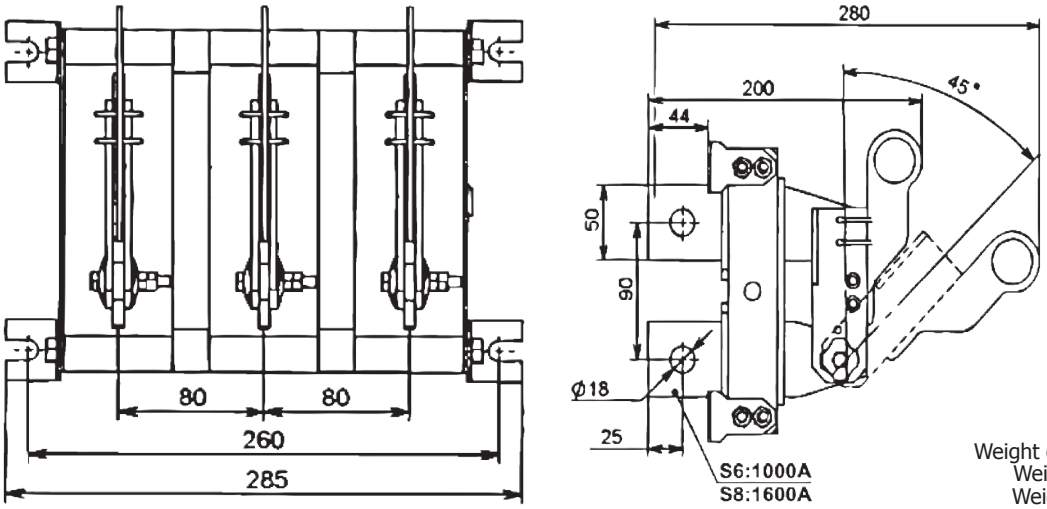

c)

Weight of the single pole, kg - 3.2
Weight of the bipolar, kg - 5.1
Weight of the tripolar, kg - 7.8

Disconnector RE19 with lever for bar polar operation, front busbar attachment on the insulation board

a) single pole; b) bipolar; c) tripolar

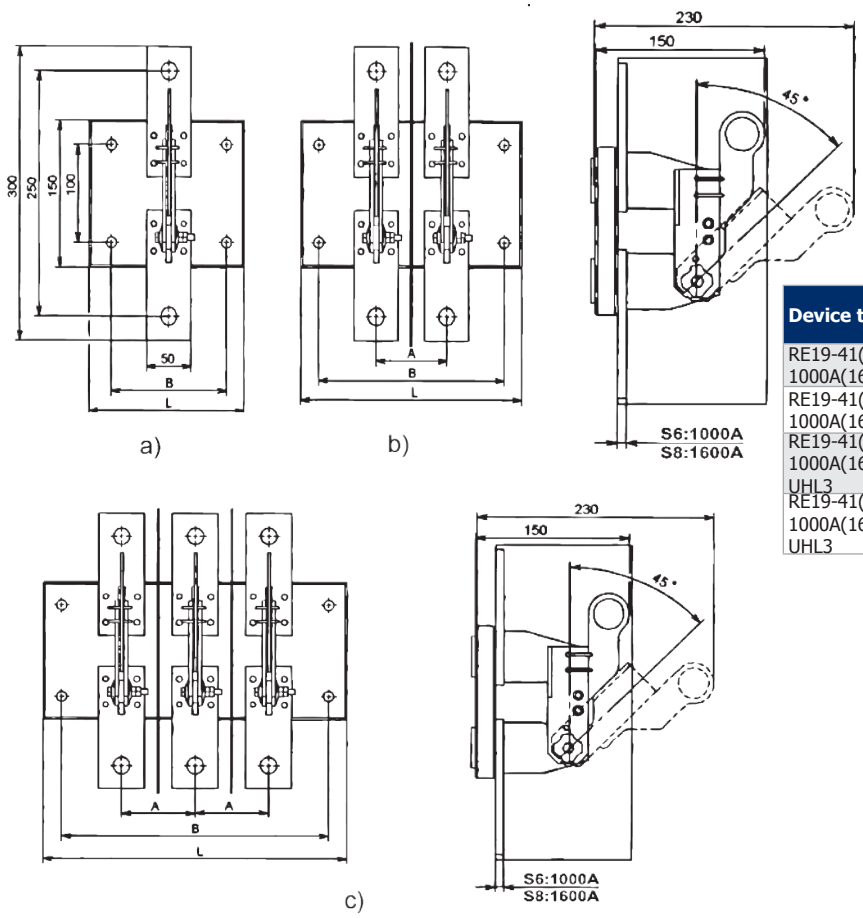

Device type	Rated current, A	Dimention, mm			Number of poles
		A	B	L	
RE19-41(43)-11160-1000A(1600A)-UHL3	1000/1600	-	130	175	1
RE19-41(43)-21160-1000A(1600A)-UHL3	1000/1600	80	210	250	2
RE19-41(43)-21160-1000A(1600A)-MP105-UHL3	1000/1600	105	235	275	2
RE19-41(43)-21160-1000A(1600A)-MP130-UHL3	1000/1600	130	260	300	2

Weight of the single pole, kg - 3
Weight of the bipolar, kg - 5.4
Weight of the tripolar, kg - 8

Device type	Rated current, A	Dimention, mm			Number of poles
		A	B	L	
RE19-41(43)-31160-1000A(1600A)-UHL3	1000/1600	80	280	330	3
RE19-41(43)-31160-1000A(1600A)-MP105-UHL3	1000/1600	105	345	380	3
RE19-41(43)-31160-1000A(1600A)-MP130-UHL3	1000/1600	130	390	430	3

Disconnector RE19 with lever for bar polar operation, rear busbar attachment on the insulation board

a) single pole; b) bipolar; c) tripolar

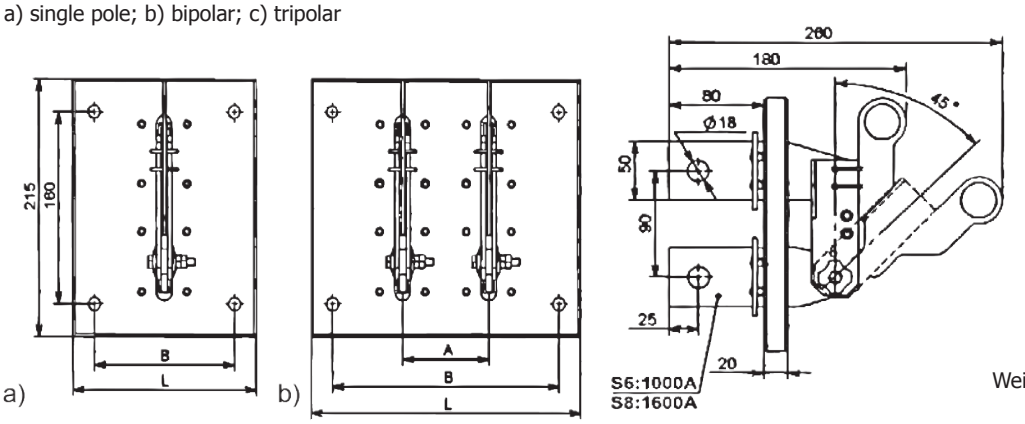

Weight of the single pole, kg - 3.2
Weight of the bipolar, kg - 5.1

Device type	Rated current, A	Dimention, mm			Number of poles
		A	B	L	
RE19-41(43)-12260-1000A(1600A)-IR-UHL3	1000/1600	-	130	175	1
RE19-41(43)-22260-1000A(1600A)-IR-UHL3	1000/1600	80	210	250	2
RE19-41(43)-22260-1000A(1600A)-IR-MP105-UHL3	1000/1600	105	235	275M	2
RE19-41(43)-22260-1000A(1600A)-IR-MP130-UHL3	1000/1600	130	260	300	2

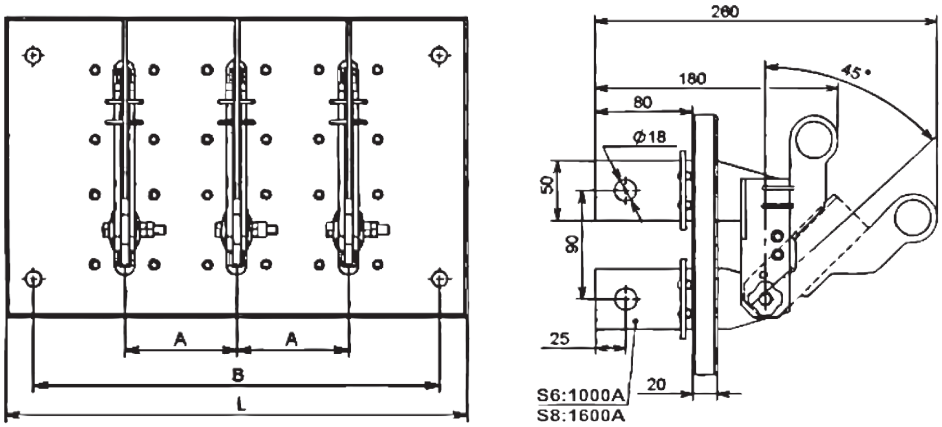

c)

Weight, kg - 7,8

Device type	Rated current, A	Dimention, mm			Number of poles
		A	B	L	
RE19-41(43)-32260-1000A(1600A)-IP-UHL3	1000/1600	80	280	330	3
RE19-41(43)-32260-1000A(1600A)-IP-MP105-UHL3	1000/1600	105	340	380	3
RE19-41(43)-32260-1000A(1600A)-IP-MP130-UHL3	1000/1600	130	390	430	3

Disconnector RE19-41(43)-1(2,3)1170-1000A(1600A)-UHL3 with handle for polar operation, front busbar attachment

a) single pole; b) bipolar; c) tripolar

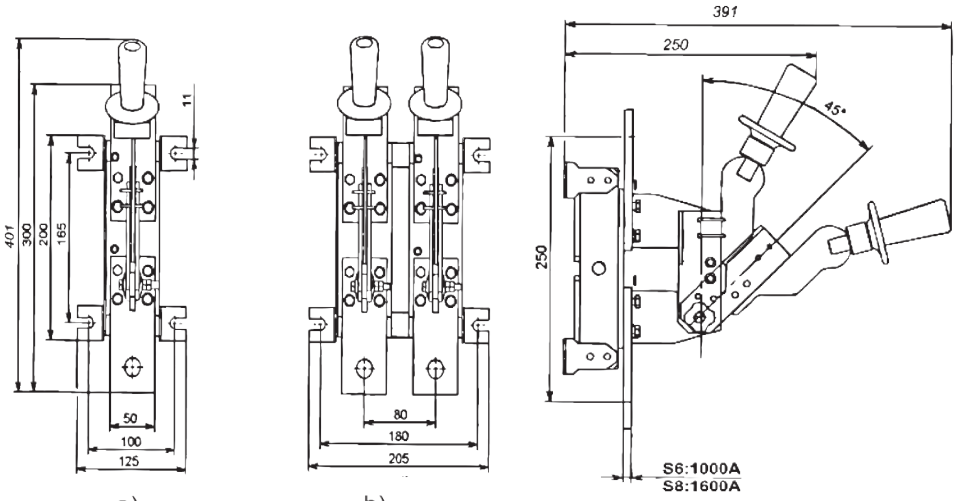

a) b)

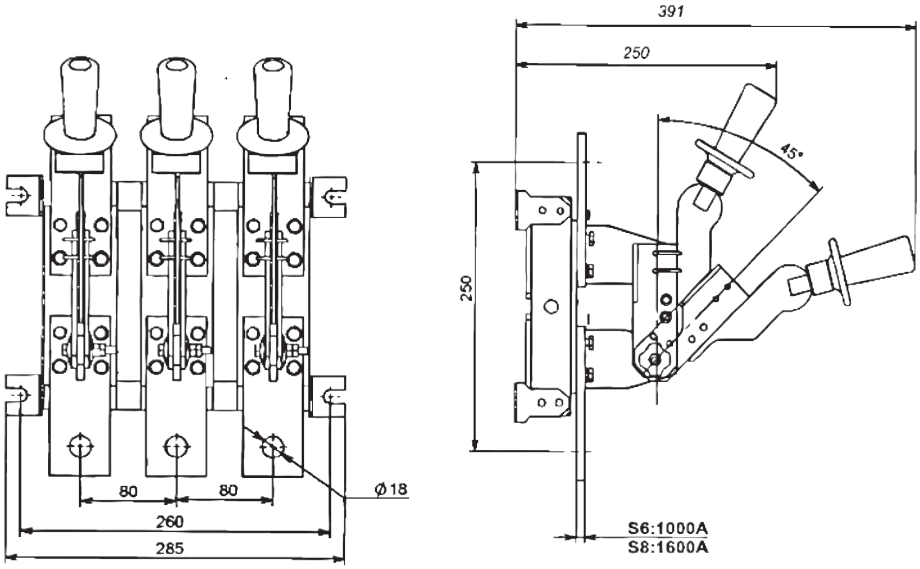

c)

Weight of the single pole, kg - 3,2
Weight of the bipolar, kg - 6
Weight of the tripolar, kg - 8.4

Disconnector RE19-41(43)-1(2,3)2270-1000A(1600A)-UHL3 with handle for polar operation, rear busbar attachment

a) single pole; b) bipolar; c) tripolar

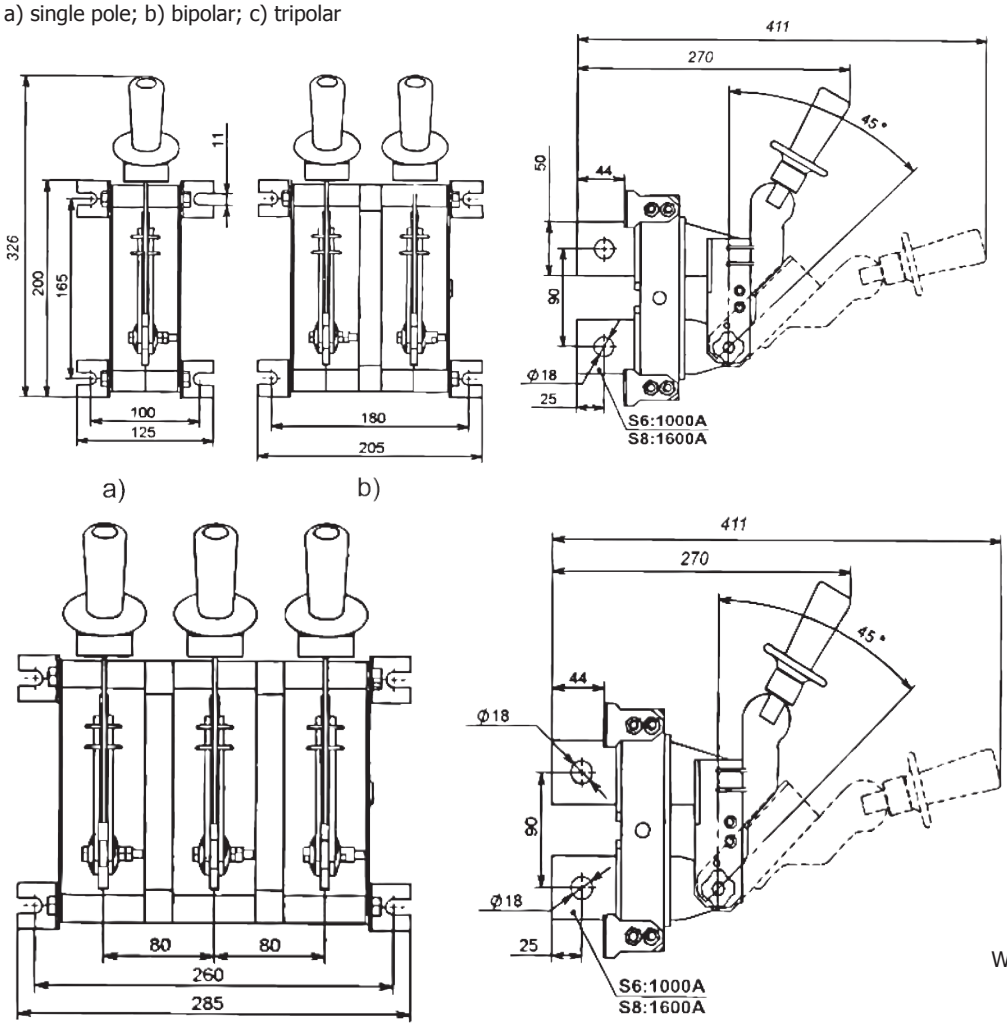

Weight of the single pole, kg - 3.1
Weight of the bipolar, kg - 5
Weight of the tripolar, kg - 7.4

Disconnector RE19-41(43)-1(2,3)1170-1000A(1600A)-IP-UHL3 with handle for polar operation, front busbar attachment on the insulation board

a) single pole; b) bipolar; c) tripolar

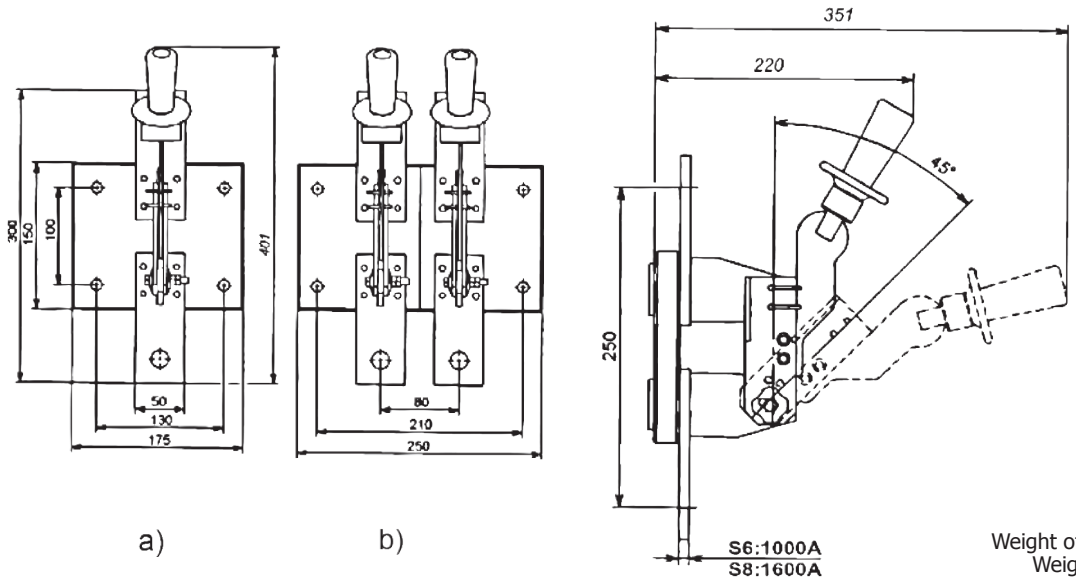

Weight of the single pole, kg - 3.1
Weight of the bipolar, kg - 7.6

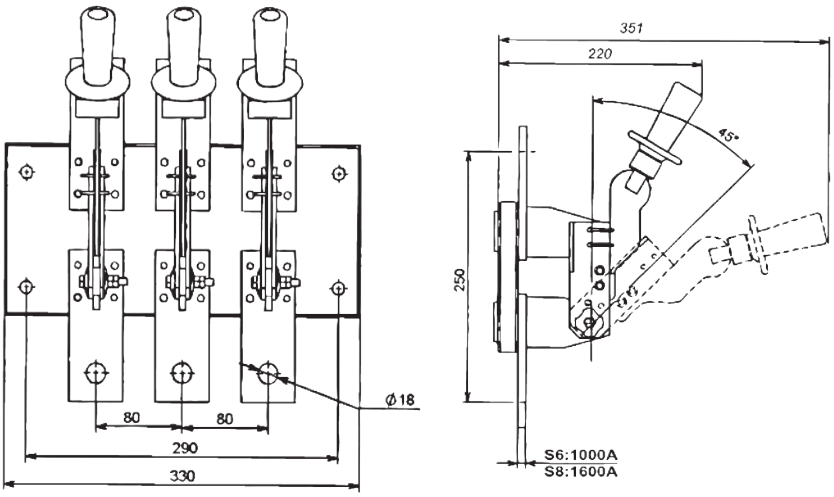

c)

Weight, kg - 8,3

Disconnector RE19 with handle for polar operation, rear busbar attachment on the insulation board

a) single pole; b) bipolar; c) tripolar

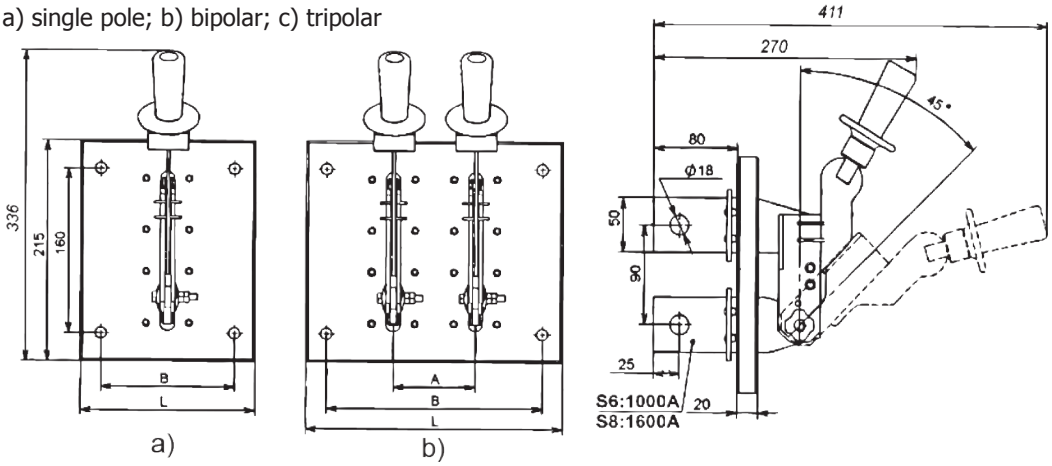

a) b)

Device type	Rated current, A	Dimention, mm			Number of poles
		A	B	L	
RE19-41(43)-12270-1000A(1600A)-IP-UHL3	1000/1600	-	130	175	1
RE19-41(43)-22270-1000A(1600A)-IP-UHL3	1000/1600	80	210	250	2
RE19-41(43)-22270-1000A(1600A)-IP-MP105-UHL3	1000/1600	105	235	275	2
RE19-41(43)-22270-1000A(1600A)-IP-MP130-UHL3	1000/1600	130	260	300	2

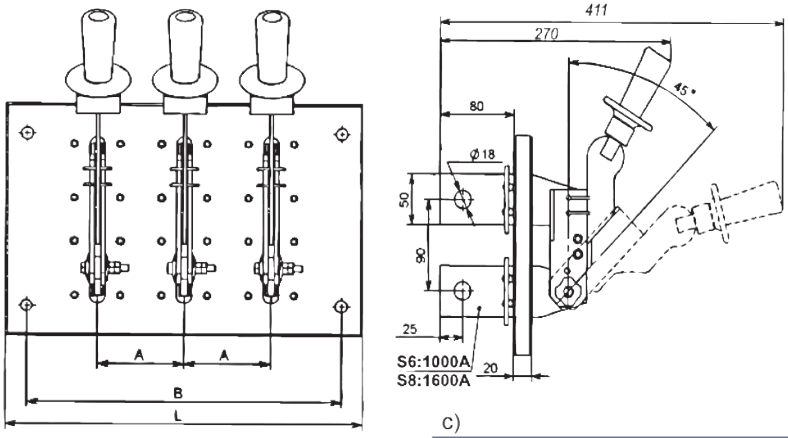

c)

Weight of the single pole, kg - 4.5
Weight of the bipolar, kg - 8
Weight of the tripolar, kg - 9.2

Device type	Rated current, A	Dimention, mm			Number of poles
		A	B	L	
RE19-41(43)-32270-1000A(1600A)-IP-UHL3	1000/1600	80	290	330	3
RE19-41(43)-32270-1000A(1600A)-IP-MP105-UHL3	1000/1600	105	340	380	3
RE19-41(43)-32270-1000A(1600A)-IP-MP130-UHL3	1000/1600	130	390	430	3

Disconnector RE19-41(43)-2(3)1190-1000A(1600A)-UHL3 with central lever for bar control, front busbar attachment

a) bipolar; b) tripolar

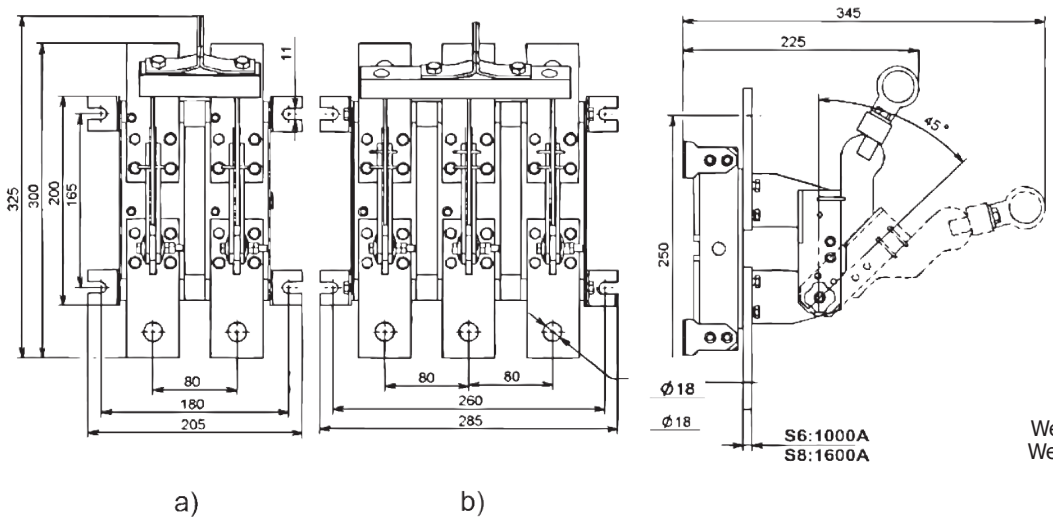

Weight of the bipolar, kg - 5.9
Weight of the tripolar, kg - 8.2

Disconnector RE19-41(43)-2(3)1110-1000A(1600A)-UHL3 with central handle, front busbar attachment

a) bipolar; b) tripolar

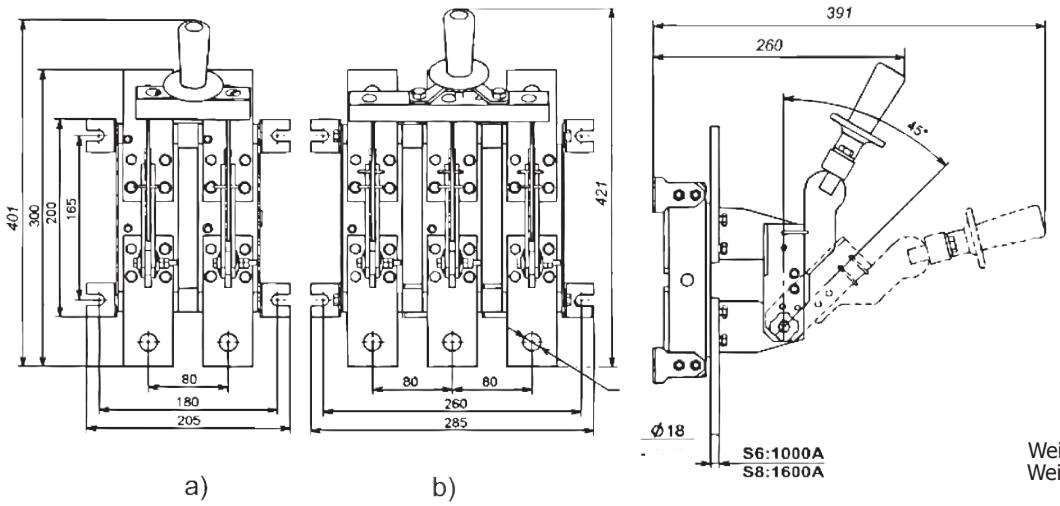

Weight of the bipolar, kg - 5.9
Weight of the tripolar, kg - 7.7

Disconnector RE19-41(43)-2(3)2290-1000A(1600A)-UHL3 with central lever for bar control, rear busbar attachment

a) bipolr; b) tripolar

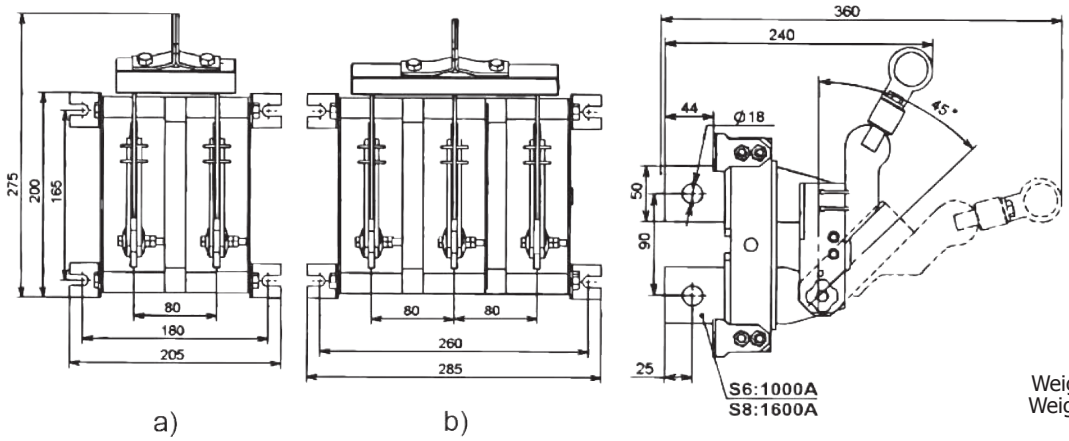

Weight of the bipolar, kg - 5,8
Weight of the tripolar, kg - 8,1

Disconnector RE19-41(43)-2(3)2210-1000A(1600A)-UHL3 with central handle, rear busbar attachment

a) bipolar; b) tripolar

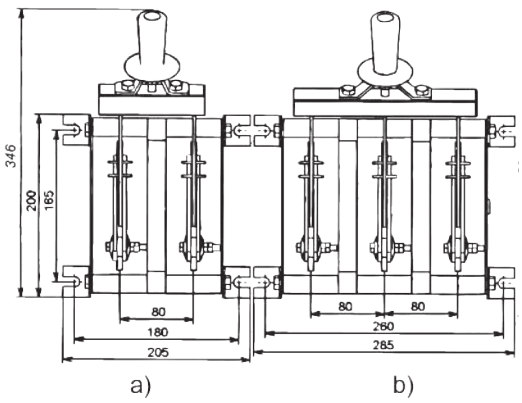

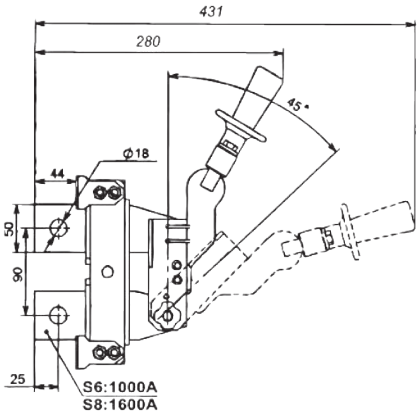

Weight of the bipolar, kg - 5.4
Weight of the tripolar, kg - 7.6

Разъединитель RE19 с центральным рычагом для управления штангой, переднего присоединения шин на изоляционной плите

a) bipolar; b) tripolar

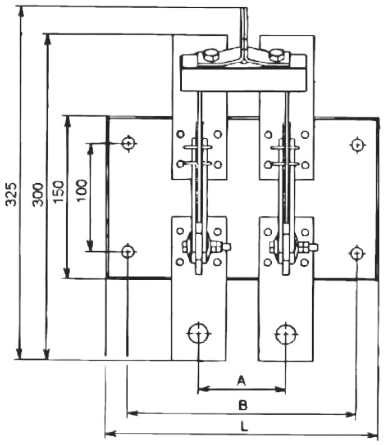

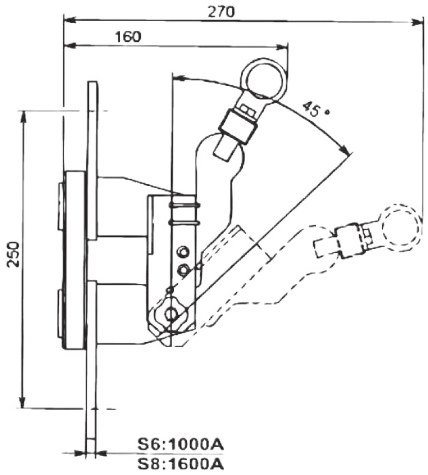

a)

Weight, kg - 5,4

Device type	Rated current, A	Dimention, mm			Number of poles
		A	B	L	
RE19-41(43)-21190-1000A(1600A)-IP-UHL3	1000/1600	80	210	250	2
RE19-41(43)-21190-1000A(1600A)-IP-MP105-UHL3	1000/1600	105	235	275	2
RE19-41(43)-21190-1000A(1600A)-IP-MP130-UHL3	1000/1600	130	260	300	2

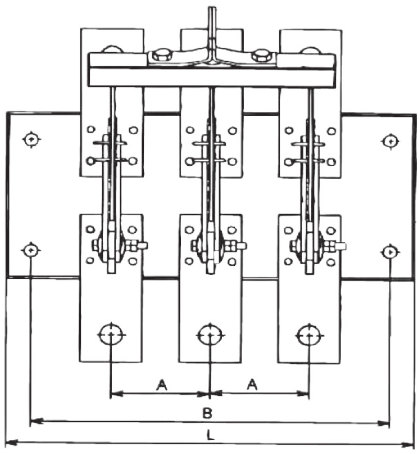

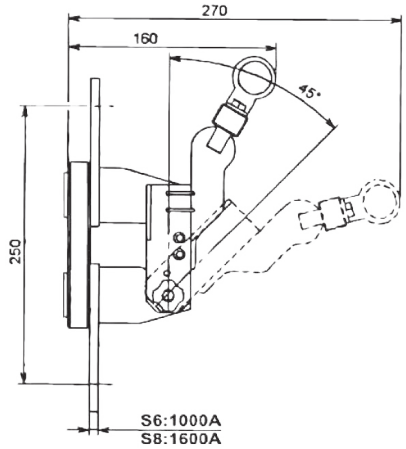

b)

Weight, kg - 7,9

Device type	Rated current, A	Dimention, mm			Number of poles
		A	B	L	
RE19-41(43)-31190-1000A(1600A)-IP-UHL3	1000/1600	80	290	330	3
RE19-41(43)-31190-1000A(1600A)-IP-MP105-UHL3	1000/1600	105	340	380	3
RE19-41(43)-31190-1000A(1600A)-IP-MP130-UHL3	1000/1600	130	390	430	3

Disconnector RE19 with central lever for bar control, rear busbar attachment on the insulation board

a) bipolar; b) tripolar

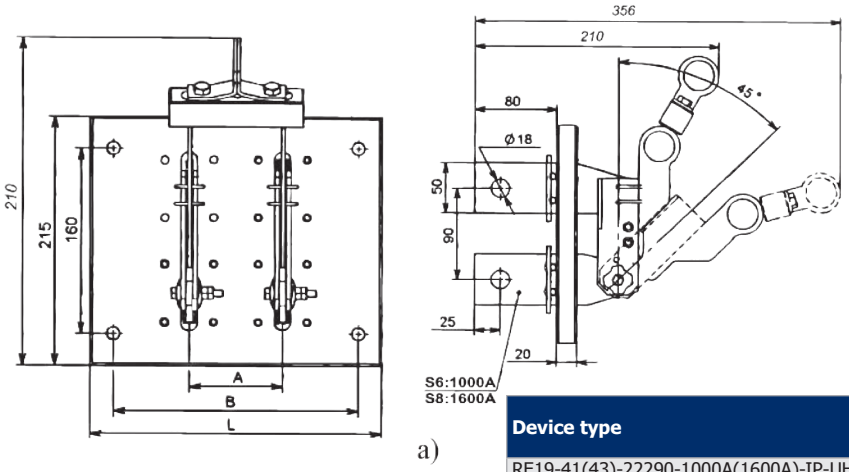

Weight, kg - 5,3

Device type	Rated current, A	Dimention, mm			Number of poles
		A	B	L	
RE19-41(43)-22290-1000A(1600A)-IP-UHL3	1000/1600	80	210	250	2
RE19-41(43)-22290-1000A(1600A)-IP-MP105-UHL3	1000/1600	105	235	275	2
RE19-41(43)-22290-1000A(1600A)-IP-MP130-UHL3	1000/1600	130	260	300	2

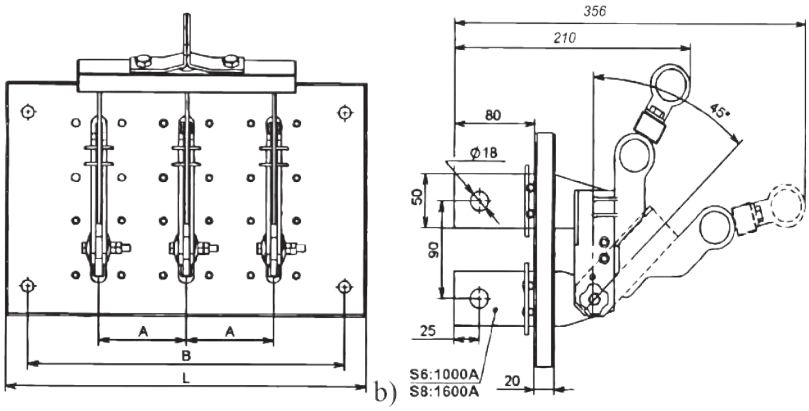

Weight, kg - 8

Device type	Rated current, A	Dimention, mm			Number of poles
		A	B	L	
RE19-41(43)-32290-1000A(1600A)-IP-UHL3	1000/1600	80	290	330	3
RE19-41(43)-32290-1000A(1600A)-IP-MP105-UHL3	1000/1600	105	340	380	3
RE19-41(43)-32290-1000A(1600A)-IP-MP130-UHL3	1000/1600	130	390	430	3

Disconnector RE19 with central handle, front busbar attachment on the insulation board

a) bipolar; b) tripolar

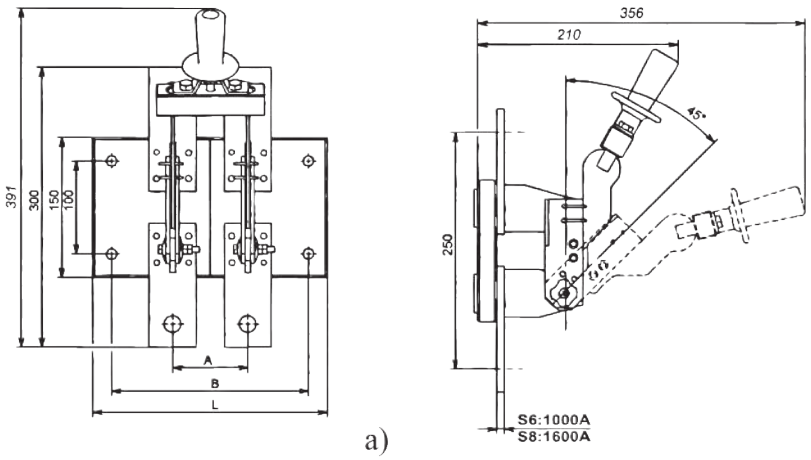

Weight, kg - 5,6

Device type	Rated current, A	Dimention, mm			Number of poles
		A	B	L	
RE19-41(43)-21110-1000A(1600A)-IP-UHL3	1000/1600	80	210	250	2
RE19-41(43)-21110-1000A(1600A)-IP-MP105-UHL3	1000/1600	105	235	275	2
RE19-41(43)-21110-1000A(1600A)-IP-MP130-UHL3	1000/1600	130	260	300	2

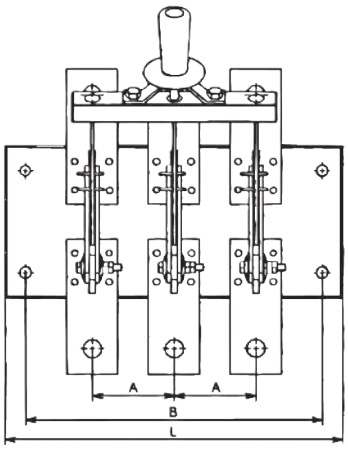

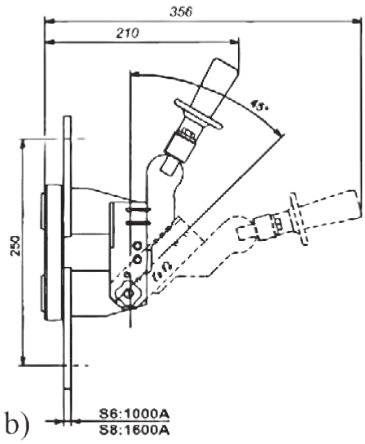

b)

Weight, kg - 8,4

Device type	Rated current, A	Dimention, mm			Number of poles
		A	B	L	
RE19-41(43)-31110-1000A(1600A)-IP-UHL3	1000/1600	80	290	330	3
RE19-41(43)-31110-1000A(1600A)-IP-MP105-UHL3	1000/1600	105	340	380	3
RE19-41(43)-31110-1000A(1600A)-IP-MP130-UHL3	1000/1600	130	390	430	3

Disconnector RE19 with central handle, rear busbar attachment on the insulation board

a) bipolar; b) tripolar

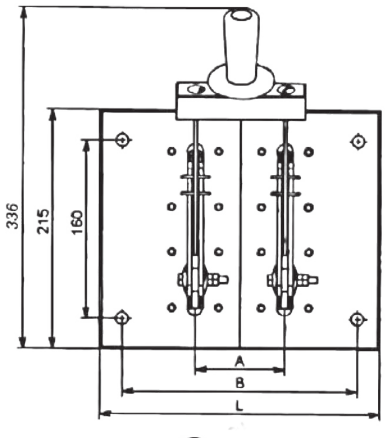

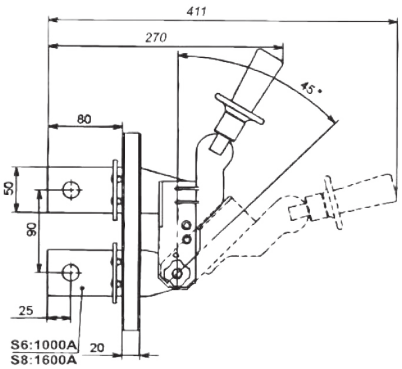

a)

Weight, kg - 5,4

Device type	Rated current, A	Dimention, mm			Number of poles
		A	B	L	
RE19-41(43)-22210-1000A(1600A)-IP-UHL3	1000/1600	80	210	250	2
RE19-41(43)-22210-1000A(1600A)-IP-MP105-UHL3	1000/1600	105	235	275	2
RE19-41(43)-22210-1000A(1600A)-IP-MP130-UHL3	1000/1600	130	260	300	2

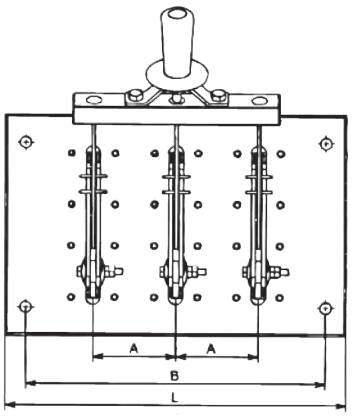

b)

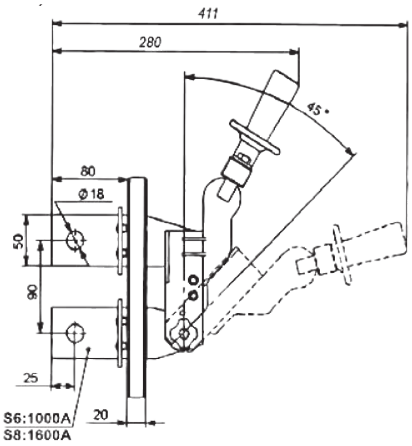

Weight, kg - 8,2

Device type	Rated current, A	Dimention, mm			Number of poles
		A	B	L	
RE19-41(43)-32210-1000A(1600A)-IP-UHL3	1000/1600	80	290	330	3
RE19-41(43)-32210-1000A(1600A)-IP-MP105-UHL3	1000/1600	105	340	380	3
RE19-41(43)-32210-1000A(1600A)-IP-MP130-UHL3	1000/1600	130	390	430	3

Disconnector RE19 for two directions with central handle, rear busbar attachment on the insulation board

a) single pole b) bipolar c) tripolar

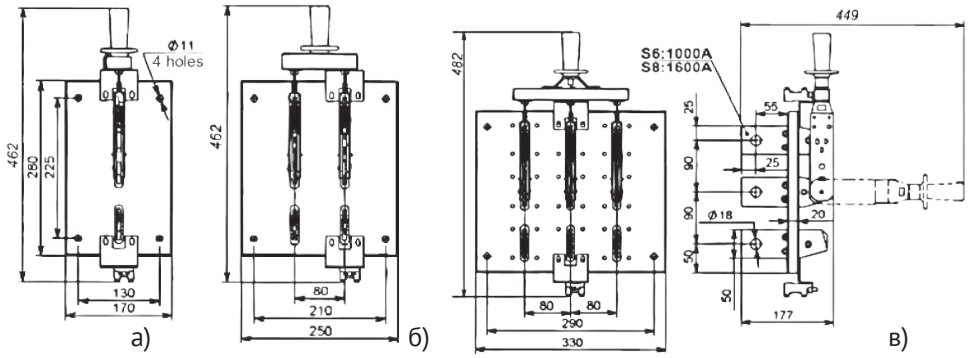

Device type	Rated current, A	Weight, kg	Number of poles
RE19-41(43)-52211-1000A(1600A)-IP-UHL3	1000/1600	4,3/4,6	1
RE19-41(43)-62211-1000A(1600A)-IP-UHL3	1000/1600	7,8/8,4	2
RE19-41(43)-72211-1000A(1600A)-IP-UHL3	1000/1600	11,7/12,7	3

Disconnector RE19 for two directions with central lever for bar control, rear busbar attachment on the insulation board

a) single pole b) bipolar c) tripolar

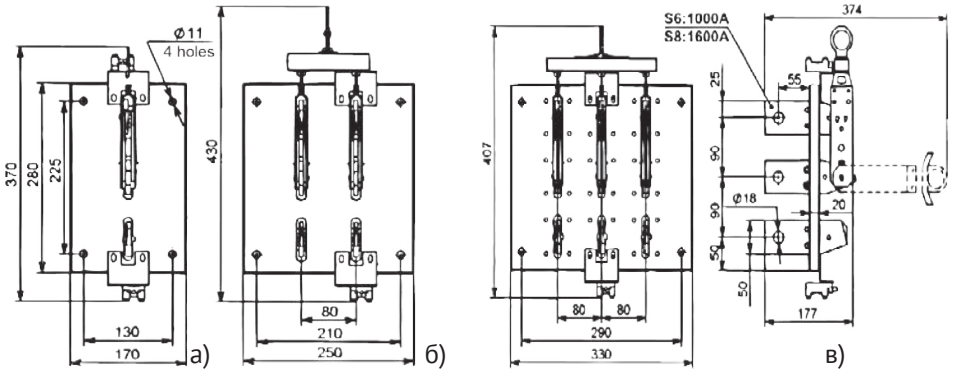

Device type	Rated current, A	Weight, kg	Number of poles
RE19-41(43)-52291-1000A(1600A)-IP-UHL3	1000/1600	4,0/4,4	1
RE19-41(43)-62291-1000A(1600A)-IP-UHL3	1000/1600	7,4/8,1	2
RE19-41(43)-72291-1000A(1600A)-IP-UHL3	1000/1600	11,1/12,1	3

Disconnector RE19 for two directions with handle for polar operation, rear busbar attachment on the insulation board

a) bipolar b) tripolar

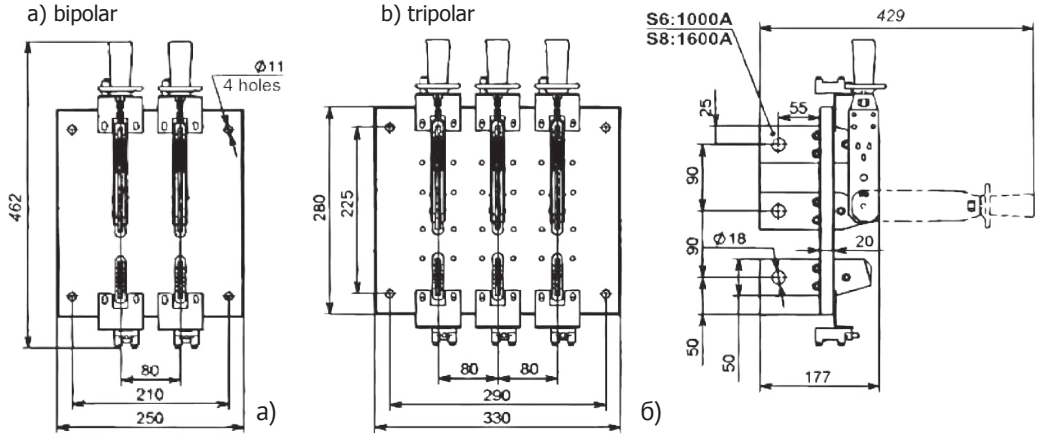

Device type	Rated current, A	Weight, kg	Number of poles
RE19-41(43)-62271-1000A(1600A)-IP-UHL3	1000/1600	8,6/9,3	2
RE19-41(43)-72271-1000A(1600A)-IP-UHL3	1000/1600	13,0/14,0	3

Disconnector RE19 for two directions with lever for bar polar operation, rear busbar attachment on the insulation board

a) bipolar b) tripolar

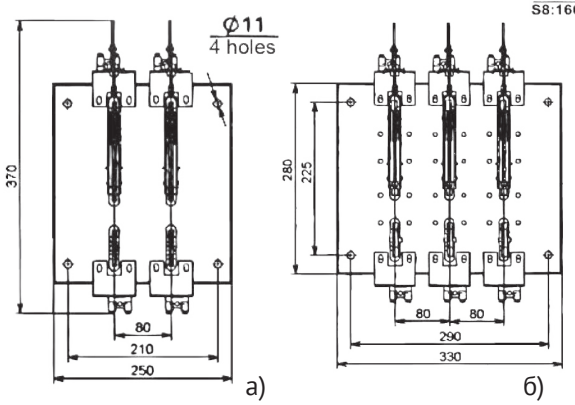

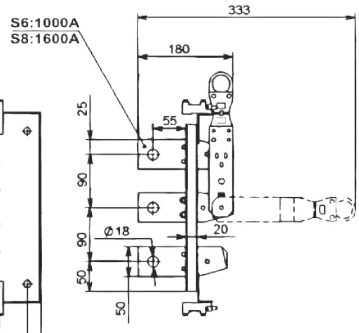

Device type	Rated current, A	Weight, kg	Number of poles
RE19-41(43)-62261-1000A(1600A)-IP-UHL3	1000/1600	8,1/8,8	2
RE19-41(43)-72261-1000A(1600A)-IP-UHL3	1000/1600	12,1/13,2	3

Disconnector RE19-41(43)-72220-1000A(1600A)-IP-UHL3 for two directions with side handle, rear busbar attachment on the insulation board

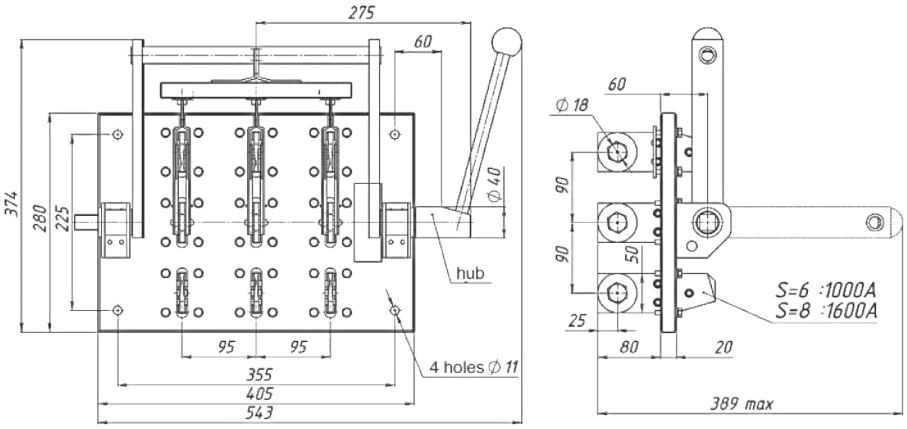

Disconnector RE19-41(43)-72250-1000A(1600A)-IP-UHL3 for two directions with side displaced handle, rear busbar attachment on the insulation board

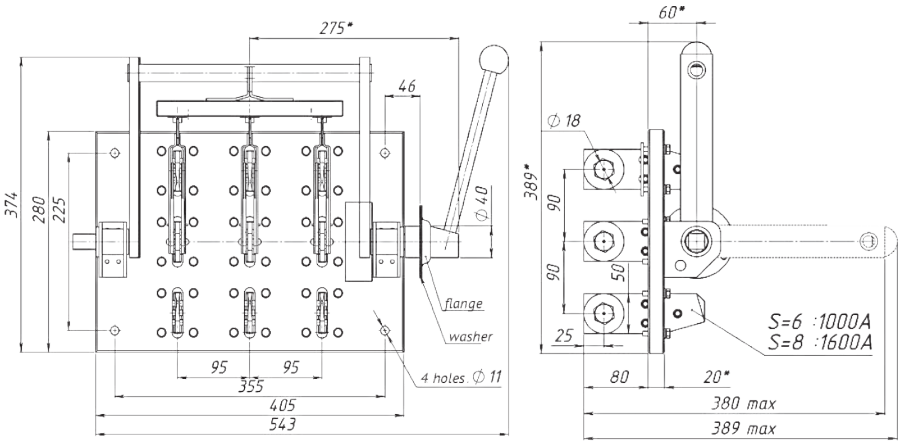

* by the order of the client the size 275 mm may be changed to 355 mm if the hub is 150 mm long.

Layout of holes
for flange installation

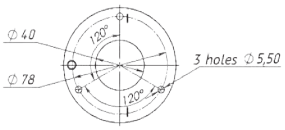

Disconnector RE19-44(45,46)-11110-2000A(2500A, 3150A)-UHL3 single pole with central handle, front busbar attachment

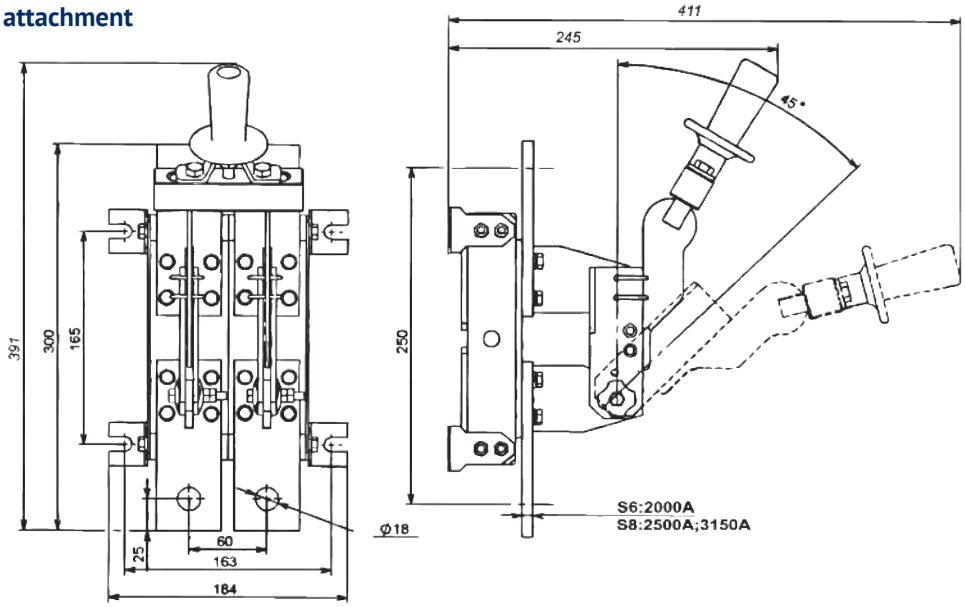

Disconnector RE19-44(45,46)-11190-2000A(2500A, 3150A)-UHL3 single pole with central lever for bar control, front busbar attachment

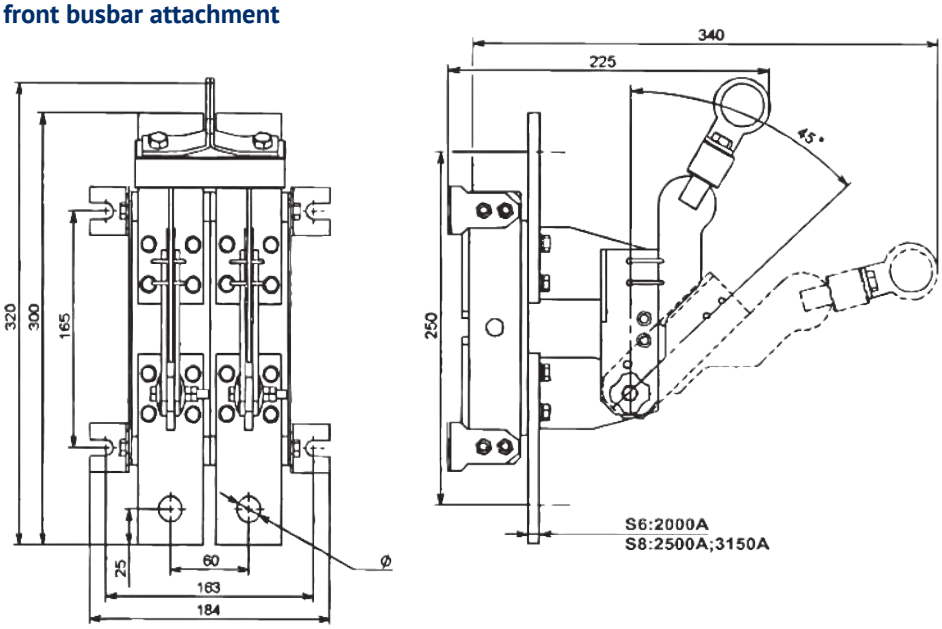

Disconnector RE19-44(45,46)-12210-2000A(2500A, 3150A)-UHL3 single pole with central handle, rear busbar attachment

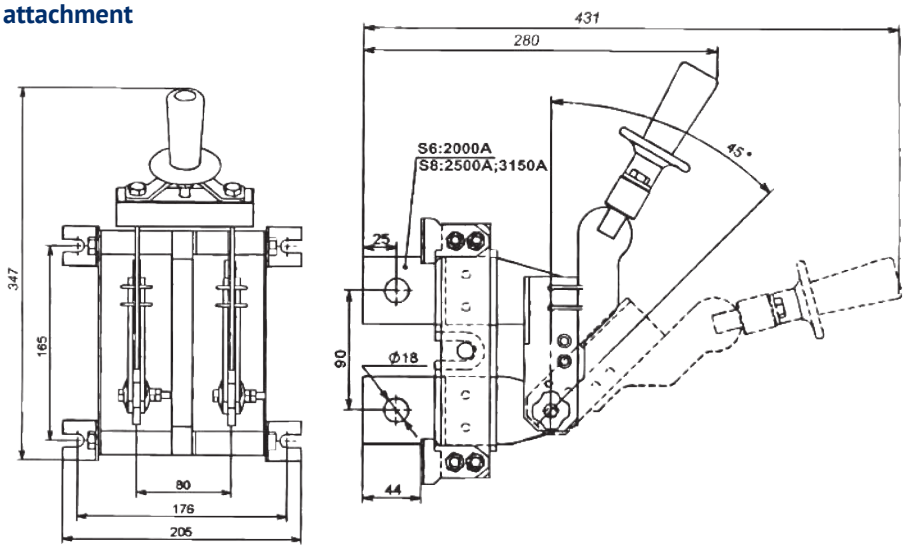

Disconnector RE19-44(45,46)-12290-2000A(2500A, 3150A)-UHL3 single pole with central lever for bar control, rear busbar attachment

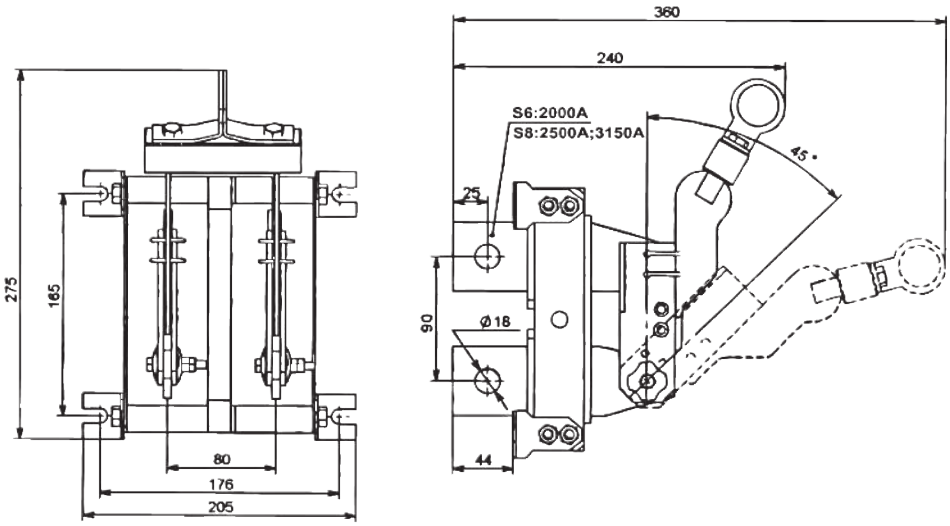

Disconnector RE19 with lever for bar polar operation front busbar attachment on the insulation board

a) single pole; b) bipolar; c) tripolar

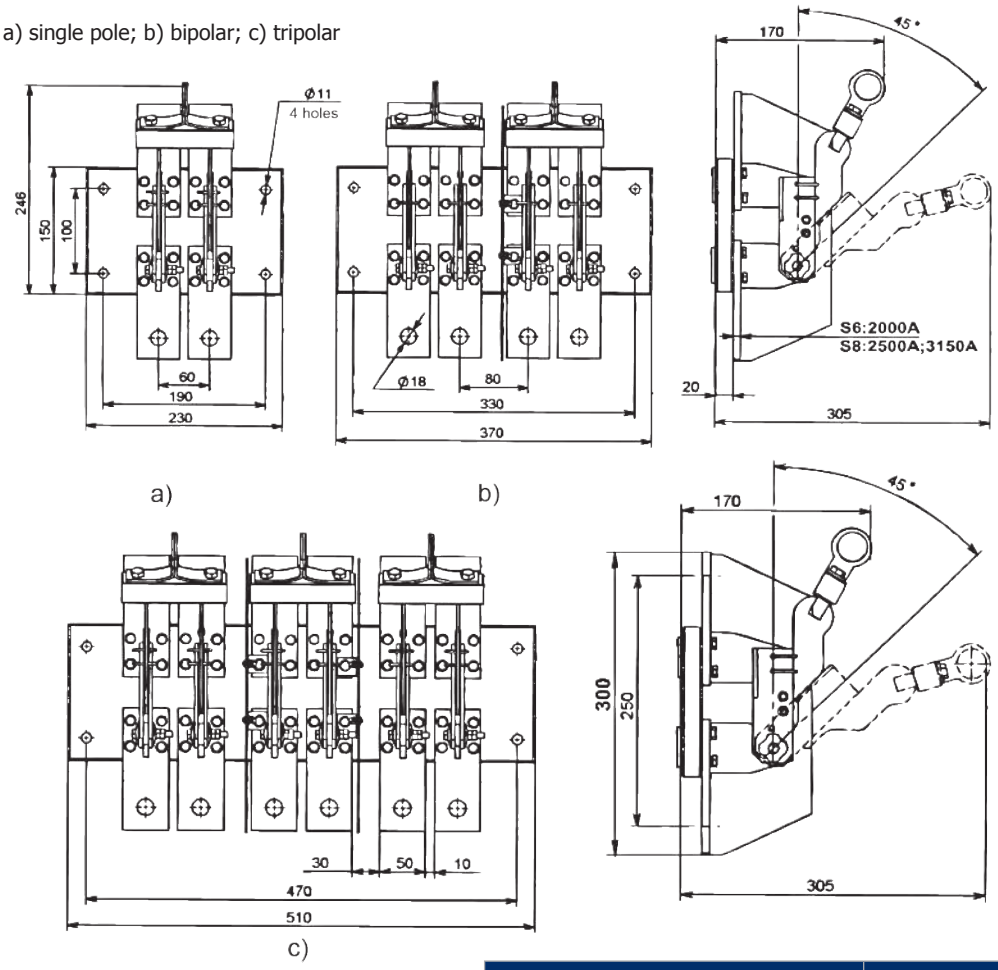

Device type	Rated current, A	Weight, kg	Number of poles
RE19-44-11160-2000A-IP-UHL3	2000	4,8	1
RE19-45(46)-11160-2500A(3150A)-IP-UHL3	2500/3150	5,9	
RE19-44-21160-2000A-IP-UHL3	2000	9,6	2
RE19-45(46)-21160-2500A(3150A)-IP-UHL3	2500/3150	11,8	
RE19-44-31160-2000A-IP-UHL3	2000	13,4	3
RE19-45(46)-31160-2500A(3150A)-IP-UHL3	2500/3150	15,8	

Disconnector RE19 with lever for bar polar operation, rear busbar attachment on the insulation board

a) single pole; b) bipolar; c) tripolar

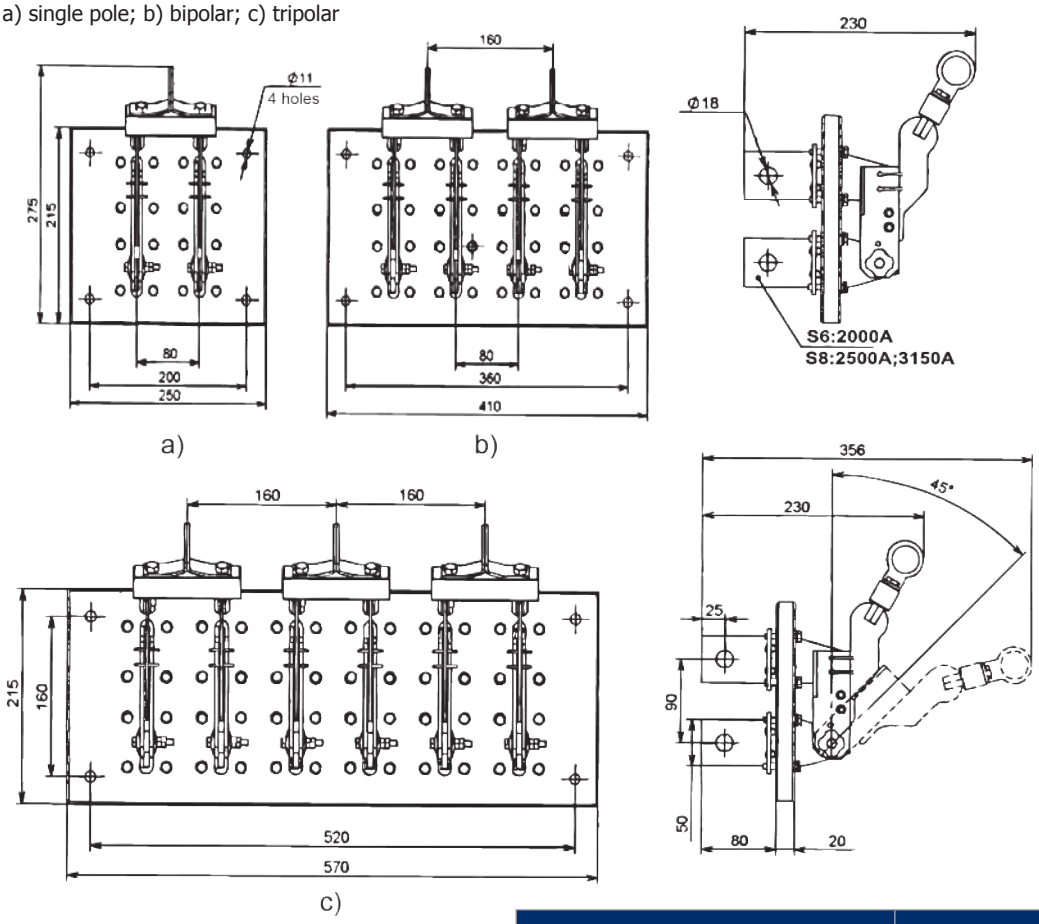

Device type	Rated current, A	Weight, kg	Number of poles
RE19-44-12260-2000A-IP-UHL3	2000	4,8	1
RE19-45(46)-12260-2500A(3150A)-IP-UHL3	2500/3150	5,9	
RE19-44-22260-2000A-IP-UHL3	2000	9,6	2
RE19-45(46)-22260-2500A(3150A)-IP-UHL3	2500/3150	11,150	
RE19-44-32260-2000A-IP-UHL3	2000	13,7	3
RE19-45(46)-32260-2500A(3150A)-IP-UHL3	2500/3150	14,8	

Disconnector RE19 with handle for polar operation, front busbar attachment on the insulation board

a) single pole; b) bipolar; c) tripolar

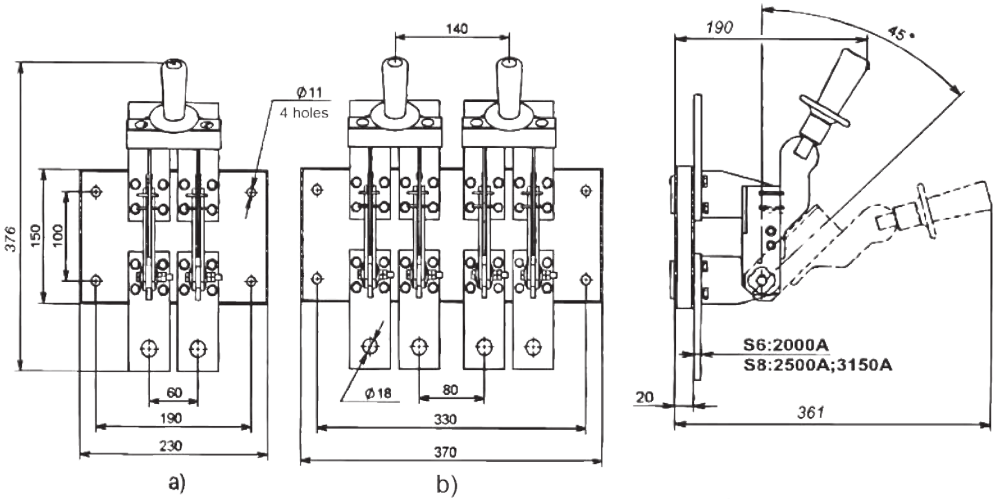

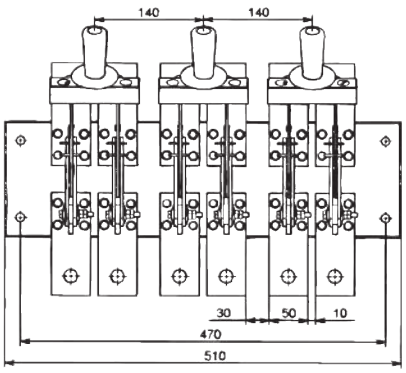

c)

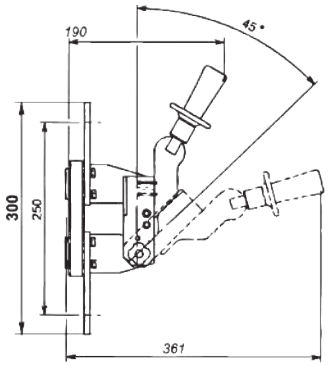

Device type	Rated current, A	Weight, kg	Number of poles
RE19-44-11170-2000A-IP-UHL3	2000	4,6	1
RE19-45(46)-11170-2500A(3150A)-IP-UHL3	2500/3150	5,7	
RE19-44-21170-2000A-IP-UHL3	2000	9,5	2
RE19-45(46)-21170-2500A(3150A)-IP-UHL3	2500/3150	11,8	
RE19-44-31170-2000A-IP-UHL3	2000	13,5	3
RE19-45(46)-31170-2500A(3150A)-IP-UHL3	2500/3150	15,5	

Disconnector RE19 with handle for polar operation, rear busbar attachment on the insulation board

a) single pole; b) bipolar; c) tripolar

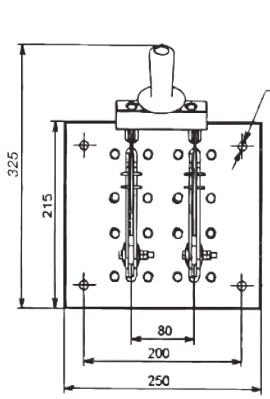

a)

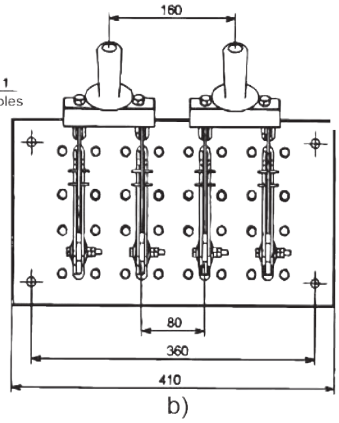

b)

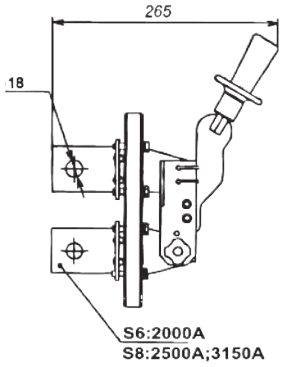

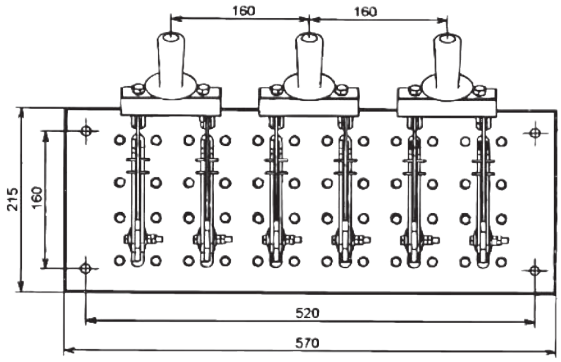

c)

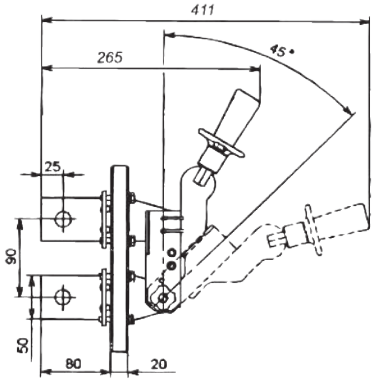

Device type	Rated current, A	Weight, kg	Number of poles
RE19-44-12270-2000A-IP-UHL3	2000	4,6	1
RE19-45(46)-12270-2500A(3150A)-IP-UHL3	2500/3150	5,7	
RE19-44-22270-2000A-IP-UHL3	2000	9,5	2
RE19-45(46)-22270-2500A(3150A)-IP-UHL3	2500/3150	11,8	
RE19-44-32270-2000A-IP-UHL3	2000	13,5	3
RE19-45(46)-32270-2500A(3150A)-IP-UHL3	2500/3150	15,5	

Disconnector RE19-47-1(2,3)2260-4000A-IP-UHL3 with lever for polar operation, rear busbar attachment on the insulation board

a) single pole; b) bipolar; c) tripolar

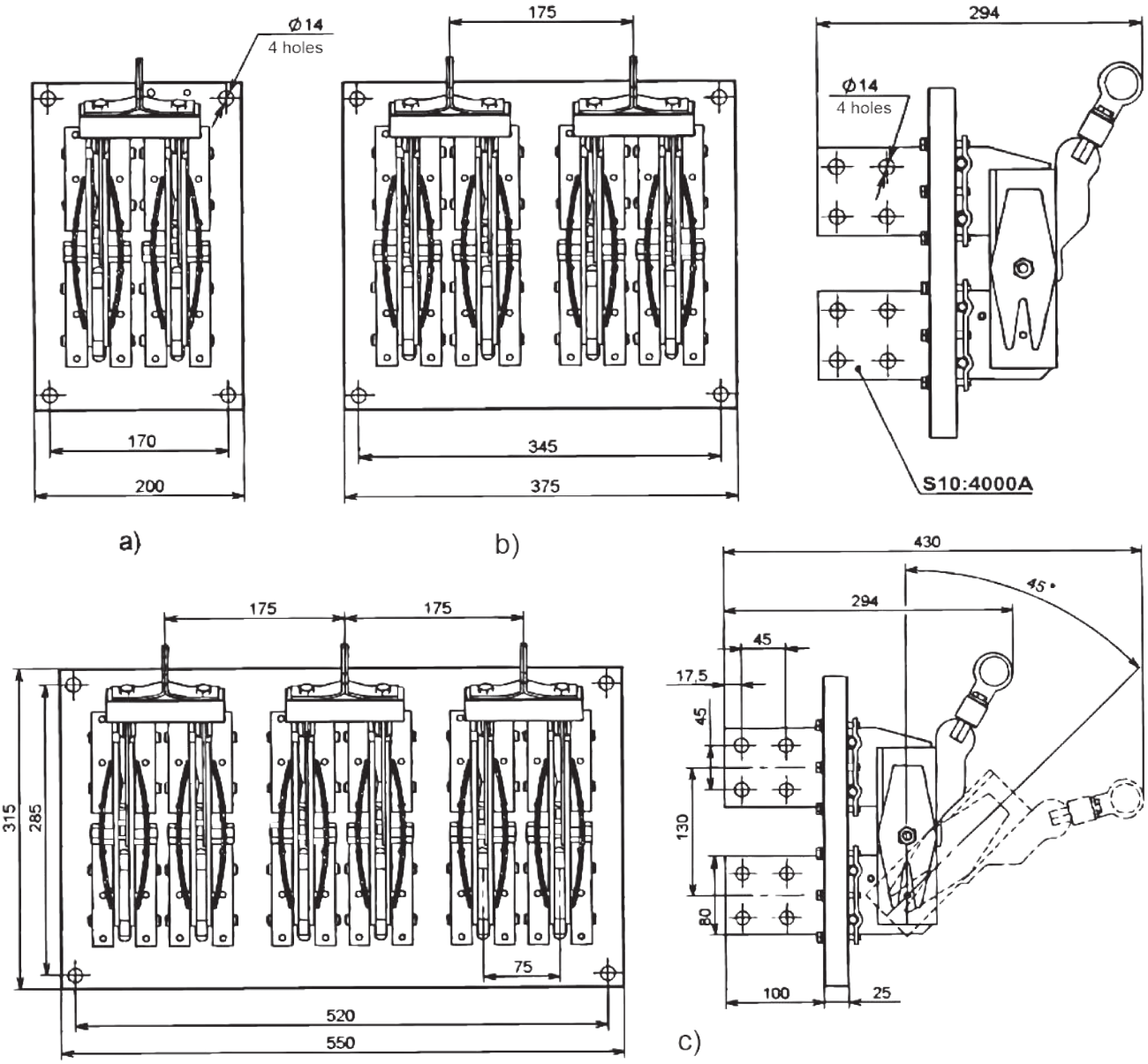

Device type	Rated current, A	Weight, kg	Number of poles
RE 19-47	4000	13.2	1
		26.2	2
		39.2	3

Disconnector RE19-47-1(2,3)2270-4000A-IP-UHL3 with handle for polar operation, rear busbar attachment on the insulation board

a) single pole; b) bipolar; c) tripolar

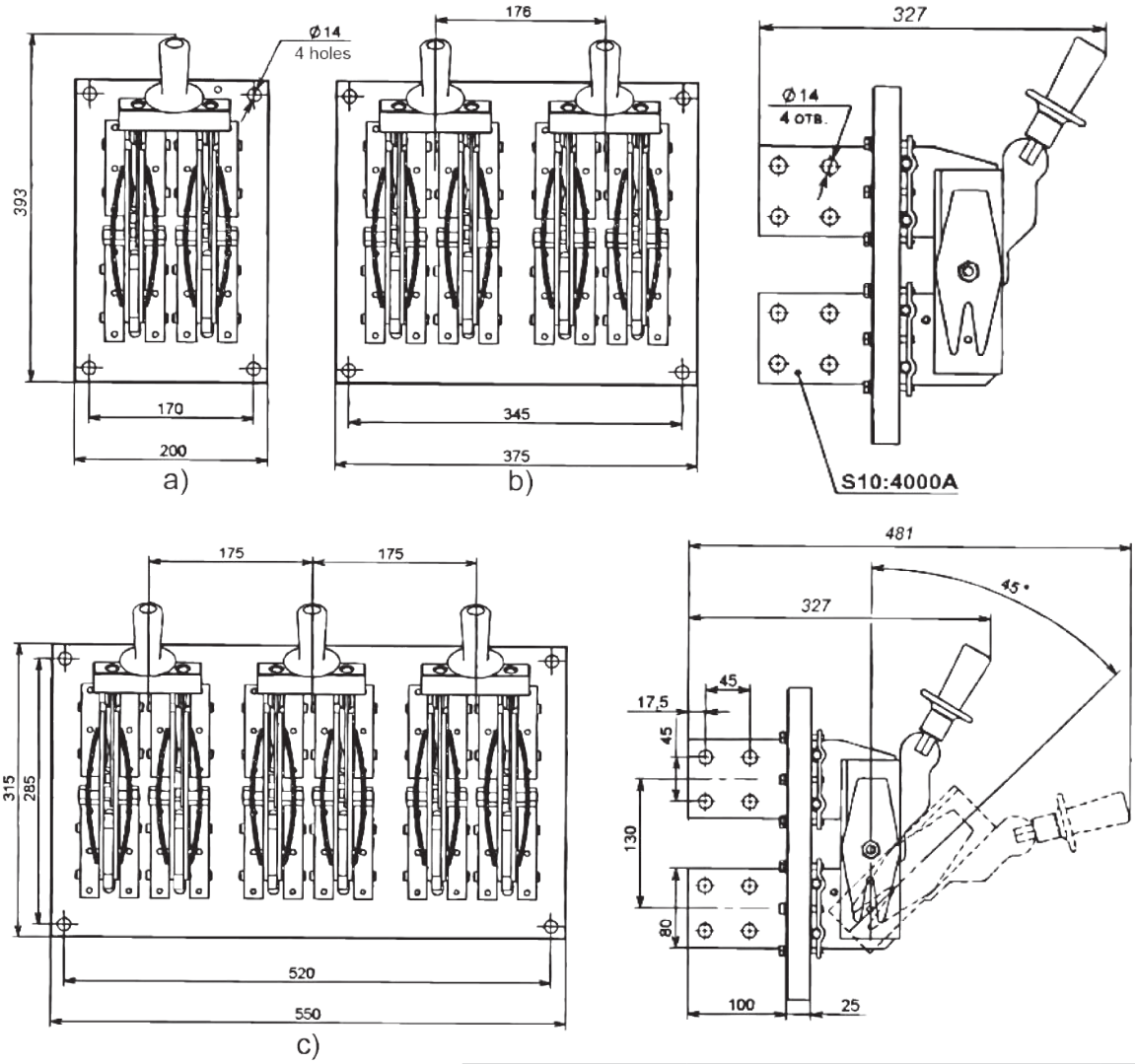

Device type	Rated current, A	Weight, kg	Number of poles
RE 19-47	4000	13.4	1
		26.6	2
		39.8	3

Rod SHO-1 for RE19 operating

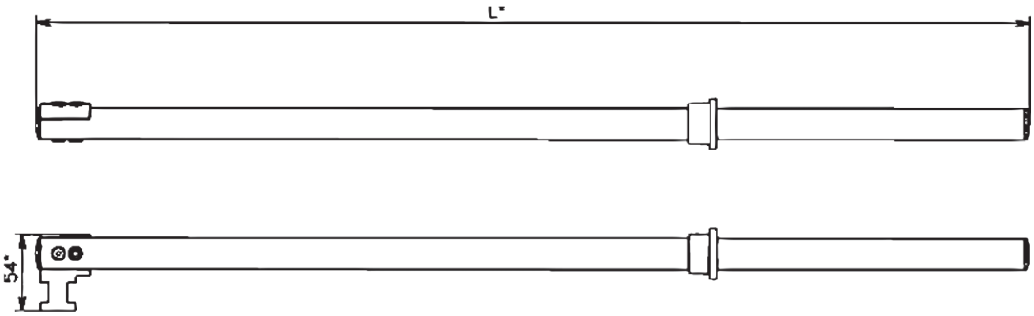

** L can be: 706 mm; 1041 mm; 1241 mm; 1541 mm; 2041 mm.*

Knife-type fuses PPN

TU 3424-050-05758109-2009

Comply with the requirements of GOST R IEC 60269-1-2010

UP TO 1600 A | 50 kA MSC | 500 V AC | -60°C +40°C | warranty 2 years | 1 INDICATOR | EAC

The power fuses of the PPN series are designed to protect against overloads and short circuits of electrical networks and electrical equipment of industrial enterprises, public and residential buildings, of alternating current with a rated voltage up to 500 V, frequency 50 and 60 Hz.

Benefits

- Implementation of any technical solutions
  - full range of products for currents from 6 to 1600 A;
  - large values of the current limit to 50 kA;
  - simple selective coordination;
  - profitability while ensuring high reliability;
  - indication and alarm of the fuse triggering.
- Ensuring reliable operation and safety of operation
  - ability to pass limited values of the expected short circuit current;
  - reliable protection against short circuits and overloads;
  - high quality materials used;
  - long service life and ease of maintenance.
- Advanced applications
  - possibility of application in harsh environments - climatic modification UHL.

Design features

The contacts of the Fuse are made in the form of a knife (sharped), which allows them to be installed in holders with less effort.

In the design of the Fuse there is a special indicator, made in the form of a sliding rod, which allows you to visually identify the fuses operated.

Fusible elements are made of electrical copper with soldering from tin, which allows to provide protection against short circuits and overloads.

Ceramic housing has high strength, due to which high rates of breaking capacity are provided.

The method of filling the fuses with filler (high purity quartz sand) allows to achieve a high filling density and provides effective damping of the electric arc inside the fuse when it is triggered.

Structure of the Fuse designation

PPN-X_1X_2-X_3X_4-X_5-X_6...A-UHL3-KEAZ

<table>
<tr><td>PPN</td><td>- Designation of the series</td></tr>
<tr><td>X_1X_2</td><td>- two-digit number: designation of the clearance
<table>
<tr><th>Indication</th><th colspan="3">33</th><th>35</th><th>37</th><th>39</th><th>41</th></tr>
<tr><td>Maximum clearance current, A</td><td>100</td><td>160</td><td>160</td><td>250</td><td>400</td><td>630</td><td>1250</td></tr>
<tr><td>Clearance</td><td>00C</td><td>00</td><td>0</td><td>1</td><td>2</td><td>3</td><td>4</td></tr>
</table></td></tr>
<tr><td>X_3</td><td>- Digit. Designation of the delivery set: X - without base (fusible link)</td></tr>
<tr><td>X_4</td><td>- Digit. Designation of the presence of a trigger indicator:
0 - w/o trigger indicator; 3 - w/trigger indicator</td></tr>
<tr><td>X_5</td><td>- Digit. clearance - 00C; 00; 0; 1; 2; 3; 4</td></tr>
<tr><td>X_6...A</td><td>- Digit. Value of the rated current of the fuse link, A</td></tr>
<tr><td>UHL3</td><td>- Climatic version in accordance with GOST 15150; UHL3</td></tr>
<tr><td>KEAZ</td><td>- Trademark</td></tr>
</table>

**) See the structure of the base designation*

Typical version
Fuse PPN-33-23-00C-100A-UHL3-KEAZ
Fuse PPN-33-H3-00C-100A-UHL3-KEAZ

Designation structure основания

PPN-XX-IH-UHL3-KEAZ

<table>
<tr><td>PPN</td><td>- Designation of the series</td></tr>
<tr><td>XX</td><td>- Two-digit or single-digit number - designation of the clearance: 00; 0; 1; 2; 3; 4</td></tr>
<tr><td>IH</td><td>- Letter "I" - the version of the base and the digit - the version number:
<table>
<tr><td>1</td><td>1B</td><td>2</td></tr>
<tr><td colspan="3">see Figure</td></tr>
<tr><td colspan="2">page 274</td><td>page 275</td></tr>
</table></td></tr>
<tr><td>UHL3</td><td>- Climatic version in accordance with GOST 15150-69; UHL3</td></tr>
<tr><td>KEAZ</td><td>- Trademark</td></tr>
</table>

Record example:
Base PPN-00-I1-B-UHL3-KEAZ

Specifications

Installation method:

- mounted on its own insulating base, in the base contacts.

Operation conditions:

- climatic category: UHL3;
- operating temperature range: -60°C to +40°C;
- operating conditions group: M7, M25;
- working position in space: vertical or horizontal.

Type			Rated current, A	Rated voltage, V AC	Power loss (W) at I_n	Limit breaking current, kA alternating current	Packing, pcs	Weight, kg
PPN-33-H3 (H0)	clearance	00C	6	500	1.6	50	5	0.2
PPN-33-H3 (H0)	clearance	00C	10	500	1.7	50	5	0.2
PPN-33-H3 (H0)	clearance	00C	16	500	1.8	50	5	0.2
PPN-33-H3 (H0)	clearance	00C	20	500	1.9	50	5	0.2
PPN-33-H3 (H0)	clearance	00C	25	500	2.0	50	5	0.2
PPN-33-H3 (H0)	clearance	00C	32	500	2.1	50	5	0.2
PPN-33-H3 (H0)	clearance	00C	40	500	3.1	50	5	0.2
PPN-33-H3 (H0)	clearance	00C	50	500	4.3	50	5	0.2
PPN-33-H3 (H0)	clearance	00C	63	500	5.8	50	5	0.2
PPN-33-H3 (H0)	clearance	00C	80	500	9.0	50	5	0.2
PPN-33-H3 (H0)	clearance	00C	100	500	11	50	5	0.2
PPN-33-H3 (H0)	clearance	00	6	500	1.6	50	5	0.2
PPN-33-H3 (H0)	clearance	00	10	500	1.7	50	5	0.2
PPN-33-H3 (H0)	clearance	00	16	500	1.8	50	5	0.2
PPN-33-H3 (H0)	clearance	00	20	500	1.9	50	5	0.2
PPN-33-H3 (H0)	clearance	00	25	500	2.0	50	5	0.2
PPN-33-H3 (H0)	clearance	00	32	500	2.1	50	5	0.2
PPN-33-H3 (H0)	clearance	00	40	500	3.1	50	5	0.2
PPN-33-H3 (H0)	clearance	00	50	500	4.3	50	5	0.2
PPN-33-H3 (H0)	clearance	00	63	500	5.8	50	5	0.2
PPN-33-H3 (H0)	clearance	00	80	500	9.0	50	5	0.2
PPN-33-H3 (H0)	clearance	00	100	500	10.2	50	5	0.2
PPN-33-H3 (H0)	clearance	00	125	500	12.2	50	5	0.2
PPN-33-H3 (H0)	clearance	00	160	500	14.4	50	5	0.2
PPN-33-H3 (H0)	clearance	0	40	500	3.1	50	5	0.26
PPN-33-H3 (H0)	clearance	0	50	500	4.3	50	5	0.26
PPN-33-H3 (H0)	clearance	0	63	500	5.8	50	5	0.26
PPN-33-H3 (H0)	clearance	0	80	500	9.0	50	5	0.26
PPN-33-H3 (H0)	clearance	0	100	500	10.2	50	5	0.26
PPN-33-H3 (H0)	clearance	0	125	500	12.2	50	5	0.26
PPN-33-H3 (H0)	clearance	0	160	500	16	50	5	0.26
PPN-35-H3 (H0)	clearance	1	10	500	1.7	50	5	0.27
PPN-35-H3 (H0)	clearance	1	16	500	1.8	50	5	0.27
PPN-35-H3 (H0)	clearance	1	20	500	1.9	50	5	0.27
PPN-35-H3 (H0)	clearance	1	32	500	2.1	50	5	0.27
PPN-35-H3 (H0)	clearance	1	63	500	5.8	50	5	0.27
PPN-35-H3 (H0)	clearance	1	80	500	9.0	50	5	0.27
PPN-35-H3 (H0)	clearance	1	100	500	11	50	5	0.27
PPN-35-H3 (H0)	clearance	1	125	500	12.2	50	5	0.27
PPN-35-H3 (H0)	clearance	1	160	500	16	50	5	0.27
PPN-35-H3 (H0)	clearance	1	200	500	18.6	50	5	0.27
PPN-35-H3 (H0)	clearance	1	250	500	23	50	5	0.27
PPN-37-H3 (H0)	clearance	2	40	500	3.1	50	5	0.5
PPN-37-H3 (H0)	clearance	2	50	500	4.3	50	5	0.5
PPN-37-H3 (H0)	clearance	2	63	500	5.8	50	5	0.5

Type			Rated current, A	Rated voltage, V AC	Power loss (W) at I_n	Limit breaking current, kA alternating current	Packing, pcs	Weight, kg
PPN-37-H3 (H0)	clearance	2	80	500	9.0	50	5	0.5
PPN-37-H3 (H0)	clearance	2	100	500	11	50	5	0.5
PPN-37-H3 (H0)	clearance	2	125	500	12.2	50	5	0.5
PPN-37-H3 (H0)	clearance	2	160	500	14.4	50	5	0.5
PPN-37-H3 (H0)	clearance	2	200	500	18.6	50	5	0.5
PPN-37-H3 (H0)	clearance	2	250	500	23	50	5	0.5
PPN-37-H3 (H0)	clearance	2	315	500	30.5	50	5	0.5
PPN-37-H3 (H0)	clearance	2	400	500	34.0	50	5	0.5
PPN-39-H3 (H0)	clearance	3	100	500	11	50	5	1.1
PPN-39-H3 (H0)	clearance	3	160	500	14.4	50	5	1.1
PPN-39-H3 (H0)	clearance	3	200	500	18.6	50	5	1.1
PPN-39-H3 (H0)	clearance	3	250	500	23	50	5	1.1
PPN-39-H3 (H0)	clearance	3	315	500	30.5	50	5	1.1
PPN-39-H3 (H0)	clearance	3	400	500	34.0	50	5	1.1
PPN-39-H3 (H0)	clearance	3	500	500	40.3	50	5	1.1
PPN-39-H3 (H0)	clearance	3	630	500	48	50	5	1.1
PPN-41-H3 (H0)	clearance	4	630	500	48	50	5	2.6
PPN-41-H3 (H0)	clearance	4	800	500	60.0	50	5	2.6
PPN-41-H3 (H0)	clearance	4	1000	500	90.0	50	5	2.6
PPN-41-H3 (H0)	clearance	4	1250	500	110.0	50	5	2.6

Item numbers

	Name	Clearance	Rated current of fuse, A	Item number
	Fuse PPN-33-H0-00C-6A-UHL3	00C	6	111300
	Fuse PPN-33-H0-00C-10A-UHL3	00C	10	111292
	Fuse PPN-33-H0-00C-16A-UHL3	00C	16	111294
	Fuse PPN-33-H0-00C-20A-UHL3	00C	20	111295
	Fuse PPN-33-H0-00C-25A-UHL3	00C	25	111296
	Fuse PPN-33-H0-00C-32A-UHL3	00C	32	111297
	Fuse PPN-33-H0-00C-40A-UHL3	00C	40	111298
	Fuse PPN-33-H0-00C-50A-UHL3	00C	50	111299
	Fuse PPN-33-H0-00C-63A-UHL3	00C	63	111301
	Fuse PPN-33-H0-00C-80A-UHL3	00C	80	111302
	Fuse PPN-33-H0-00C-100A-UHL3	00C	100	111293
	Fuse PPN-33-H0-00-6A-UHL3	00	6	111289
	Fuse PPN-33-H0-00-10A-UHL3	00	10	111279
	Fuse PPN-33-H0-00-16A-UHL3	00	16	111282
	Fuse PPN-33-H0-00-20A-UHL3	00	20	111284
	Fuse PPN-33-H0-00-25A-UHL3	00	25	111285
	Fuse PPN-33-H0-00-32A-UHL3	00	32	111286
	Fuse PPN-33-H0-00-40A-UHL3	00	40	111287
	Fuse PPN-33-H0-00-50A-UHL3	00	50	111288
	Fuse PPN-33-H0-00-63A-UHL3	00	63	111290
	Fuse PPN-33-H0-00-80A-UHL3	00	80	111291
	Fuse PPN-33-H0-00-100A-UHL3	00	100	111280
	Fuse PPN-33-H0-00-125A-UHL3	00	125	111281
	Fuse PPN-33-H0-00-160A-UHL3	00	160	111283

	Name	Clearance	Rated current of fuse, A	Item number
	Fuse PPN-33-H0-0-4A-UHL3	0	4	244892
	Fuse PPN-33-H0-0-16A-UHL3	0	16	244888
	Fuse PPN-33-H0-0-20A-UHL3	0	20	244889
	Fuse PPN-33-H0-0-25A-UHL3	0	25	244890
	Fuse PPN-33-H0-0-32A-UHL3	0	32	244891
	Fuse PPN-33-H0-0-40A-UHL3	0	40	244860
	Fuse PPN-33-H0-0-50A-UHL3	0	50	244861
	Fuse PPN-33-H0-0-63A-UHL3	0	63	244862
	Fuse PPN-33-H0-0-80A-UHL3	0	80	244863
	Fuse PPN-33-H0-0-100A-UHL3	0	100	244857
	Fuse PPN-33-H0-0-125A-UHL3	0	125	244858
	Fuse PPN-33-H0-0-160A-UHL3	0	160	244859
	Fuse PPN-35-H0-1-10A-UHL3	1	10	111303
	Fuse PPN-35-H0-1-16A-UHL3	1	16	111306
	Fuse PPN-35-H0-1-20A-UHL3	1	20	111308
	Fuse PPN-35-H0-1-25A-UHL3	1	25	244910
	Fuse PPN-35-H0-1-32A-UHL3	1	32	111311
	Fuse PPN-35-H0-1-40A-UHL3	1	40	244911
	Fuse PPN-35-H0-1-50A-UHL3	1	50	244912
	Fuse PPN-35-H0-1-63A-UHL3	1	63	111312
	Fuse PPN-35-H0-1-80A-UHL3	1	80	111313
	Fuse PPN-35-H0-1-100A-UHL3	1	100	111304
	Fuse PPN-35-H0-1-125A-UHL3	1	125	111305
	Fuse PPN-35-H0-1-160A-UHL3	1	160	111307
	Fuse PPN-35-H0-1-200A-UHL3	1	200	111309
	Fuse PPN-35-H0-1-250A-UHL3	1	250	111310
	Fuse PPN-37-H0-2-40A-UHL3	2	40	111320
	Fuse PPN-37-H0-2-50A-UHL3	2	50	111322
	Fuse PPN-37-H0-2-63A-UHL3	2	63	111323
	Fuse PPN-37-H0-2-80A-UHL3	2	80	111324
	Fuse PPN-37-H0-2-100A-UHL3	2	100	111314
	Fuse PPN-37-H0-2-125A-UHL3	2	125	111315
	Fuse PPN-37-H0-2-160A-UHL3	2	160	111316
	Fuse PPN-37-H0-2-200A-UHL3	2	200	111317
	Fuse PPN-37-H0-2-250A-UHL3	2	250	111318
	Fuse PPN-37-H0-2-315A-UHL3	2	315	111319
	Fuse PPN-37-H0-2-355A-UHL3	2	355	244924
	Fuse PPN-37-H0-2-400A-UHL3	2	400	111321
	Fuse PPN-39-H0-3-63A-UHL3	3	63	244936
	Fuse PPN-39-H0-3-100A-UHL3	3	100	244925
	Fuse PPN-39-H0-3-125A-UHL3	3	125	244933
	Fuse PPN-39-H0-3-160A-UHL3	3	160	244926
	Fuse PPN-39-H0-3-200A-UHL3	3	200	244927
	Fuse PPN-39-H0-3-250A-UHL3	3	250	111328
	Fuse PPN-39-H0-3-315A-UHL3	3	315	244929
	Fuse PPN-39-H0-3-355A-UHL3	3	355	244934
	Fuse PPN-39-H0-3-400A-UHL3	3	400	244930
	Fuse PPN-39-H0-3-500A-UHL3	3	500	111331
	Fuse PPN-39-H0-3-630A-UHL3	3	630	111332
	Fuse PPN-41-H0-4-630A-UHL3	4	630	244940
	Fuse PPN-41-H0-4-800A-UHL3	4	800	244941
	Fuse PPN-41-H0-4-1000A-UHL3	4	1000	111333
	Fuse PPN-41-H0-4-1250A-UHL3	4	1250	244938
	Fuse PPN-41-H0-4-1600A-UHL3	4	1600	244939
	Fuse PPN-41-H0-4A-630A-UHL3	4a	630	248882
	Fuse PPN-41-H0-4A-800A-UHL3	4a	800	248883
	Fuse PPN-41-H0-4A-1000A-UHL3	4a	1000	244942
	Fuse PPN-41-H0-4A-1250A-UHL3	4a	1250	248884
	Fuse PPN-41-H0-4A-1600A-UHL3	4a	1600	248885

	Name	Clearance	Rated current of fuse, A	Item number
	Fuse PPN-33-X3-00C-6A-UHL3	00C	6	111368
	Fuse PPN-33-X3-00C-10A-UHL3	00C	10	111360
	Fuse PPN-33-X3-00C-16A-UHL3	00C	16	111362
	Fuse PPN-33-X3-00C-20A-UHL3	00C	20	111363
	Fuse PPN-33-X3-00C-25A-UHL3	00C	25	111364
	Fuse PPN-33-X3-00C-32A-UHL3	00C	32	111365
	Fuse PPN-33-X3-00C-40A-UHL3	00C	40	111366
	Fuse PPN-33-X3-00C-50A-UHL3	00C	50	111367
	Fuse PPN-33-X3-00C-63A-UHL3	00C	63	111369
	Fuse PPN-33-X3-00C-80A-UHL3	00C	80	111370
	Fuse PPN-33-X3-00C-100A-UHL3	00C	100	111361
	Fuse PPN-33-X3-00-6A-UHL3	00	6	111357
	Fuse PPN-33-X3-00-10A-UHL3	00	10	111347
	Fuse PPN-33-H3-00-10A-T3	00	10	120172
	Fuse PPN-33-X3-00-16A-UHL3	00	16	111350
	Fuse PPN-33-X3-00-20A-UHL3	00	20	111352
	Fuse PPN-33-H3-00-20A-T3	00	20	120178
	Fuse PPN-33-X3-00-25A-UHL3	00	25	111353
	Fuse PPN-33-X3-00-32A-UHL3	00	32	111354
	Fuse PPN-33-H3-00-32A-T3	00	32	120181
	Fuse PPN-33-X3-00-40A-UHL3	00	40	111355
	Fuse PPN-33-H3-00-40A-T3	00	40	120183
	Fuse PPN-33-X3-00-50A-UHL3	00	50	111356
	Fuse PPN-33-X3-00-63A-UHL3	00	63	111358
	Fuse PPN-33-H3-00-63A-T3	00	63	120188
	Fuse PPN-33-X3-00-80A-UHL3	00	80	111359
	Fuse PPN-33-X3-00-100A-UHL3	00	100	111348
	Fuse PPN-33-H3-00-100A-T3	00	100	120193
	Fuse PPN-33-X3-00-125A-UHL3	00	125	111349
	Fuse PPN-33-X3-00-160A-UHL3	00	160	111351
	Fuse PPN-33-H3-0-4A-UHL3	0	4	120203
	Fuse PPN-33-H3-0-16A-UHL3	0	16	120212
	Fuse PPN-33-H3-0-20A-UHL3	0	20	120214
	Fuse PPN-33-H3-0-25A-UHL3	0	25	120216
	Fuse PPN-33-H3-0-32A-UHL3	0	32	120218
	Fuse PPN-33-X3-0-40A-UHL3	0	40	111342
	Fuse PPN-33-X3-0-50A-UHL3	0	50	111344
	Fuse PPN-33-X3-0-63A-UHL3	0	63	111345
	Fuse PPN-33-X3-0-80A-UHL3	0	80	111346
	Fuse PPN-33-X3-0-100A-UHL3	0	100	111338
	Fuse PPN-33-X3-0-125A-UHL3	0	125	111339
	Fuse PPN-33-X3-0-160A-UHL3	0	160	111341
	Fuse PPN-35-X3-1-10A-UHL3	1	10	111371
	Fuse PPN-35-X3-1-16A-UHL3	1	16	111374
	Fuse PPN-35-X3-1-20A-UHL3	1	20	111376
	Fuse PPN-35-H3-1-25A-UHL3	1	25	120225
	Fuse PPN-35-X3-1-32A-UHL3	1	32	111379
	Fuse PPN-35-H3-1-40A-UHL3	1	40	120229
	Fuse PPN-35-H3-1-50A-UHL3	1	50	120232
	Fuse PPN-35-X3-1-63A-UHL3	1	63	111380
	Fuse PPN-35-X3-1-80A-UHL3	1	80	111381
	Fuse PPN-35-X3-1-100A-UHL3	1	100	111372
	Fuse PPN-35-X3-1-125A-UHL3	1	125	111373
	Fuse PPN-35-X3-1-160A-UHL3	1	160	111375
	Fuse PPN-35-X3-1-200A-UHL3	1	200	111377
	Fuse PPN-35-X3-1-250A-UHL3	1	250	111378

	Name	Clearance	Rated current of fuse, A	Item number
	Fuse PPN-37-X3-2-40A-UHL3	2	40	111388
	Fuse PPN-37-X3-2-50A-UHL3	2	50	111391
	Fuse PPN-37-X3-2-63A-UHL3	2	63	111392
	Fuse PPN-37-X3-2-80A-UHL3	2	80	111393
	Fuse PPN-37-X3-2-100A-UHL3	2	100	111382
	Fuse PPN-37-X3-2-125A-UHL3	2	125	111383
	Fuse PPN-37-X3-2-160A-UHL3	2	160	111384
	Fuse PPN-37-X3-2-200A-UHL3	2	200	111385
	Fuse PPN-37-X3-2-250A-UHL3	2	250	111386
	Fuse PPN-37-X3-2-315A-UHL3	2	315	111387
	Fuse PPN-37-H3-2-355A-UHL3	2	355	120250
	Fuse PPN-37-X3-2-400A-UHL3	2	400	111390
	Fuse PPN-39-H3-3-63A-UHL3	3	63	120254
	Fuse PPN-39-X3-3-100A-UHL3	3	100	111394
	Fuse PPN-39-H3-3-125A-UHL3	3	125	120257
	Fuse PPN-39-X3-3-160A-UHL3	3	160	111395
	Fuse PPN-39-X3-3-200A-UHL3	3	200	111396
	Fuse PPN-39-X3-3-250A-UHL3	3	250	111397
	Fuse PPN-39-X3-3-315A-UHL3	3	315	111398
	Fuse PPN-39-H3-3-355A-UHL3	3	355	120259
	Fuse PPN-39-X3-3-400A-UHL3	3	400	111399
	Fuse PPN-39-H3-3-400A-T3	3	400	120260
	Fuse PPN-39-X3-3-500A-UHL3	3	500	111400
	Fuse PPN-39-X3-3-630A-UHL3	3	630	111401
	Fuse PPN-41-X3-4-630A-UHL3	4	630	111404
	Fuse PPN-41-X3-4-800A-UHL3	4	800	111405
	Fuse PPN-41-X3-4-1000A-UHL3	4	1000	111402
	Fuse PPN-41-X3-4-1250A-UHL3	4	1250	111403
	Fuse PPN-41-X3-4-1600A-UHL3	4	1600	240221
	Fuse PPN-41-H3-4A-1000A-UHL3	4A	1000	120268
	Fuse PPN-33-X1-00-2A-UHL3	00	2	120166
	Fuse PPN-33-X1-00-4A-UHL3	00	4	120169
	Fuse PPN-33-X1-00-6A-UHL3	00	6	120170
	Fuse PPN-33-X1-00-10A-UHL3	00	10	120173
	Fuse PPN-33-X1-00-12A-UHL3	00	12	120175
	Fuse PPN-33-X1-00-16A-UHL3	00	16	120177
	Fuse PPN-33-X1-00-20A-UHL3	00	20	120179
	Fuse PPN-33-X1-00-25A-UHL3	00	25	120180
	Fuse PPN-33-X1-00-32A-UHL3	00	32	120182
	Fuse PPN-33-X1-00-40A-UHL3	00	40	120185
	Fuse PPN-33-X1-00-50A-UHL3	00	50	120186
	Fuse PPN-33-X1-00-63A-UHL3	00	63	120190
	Fuse PPN-33-X1-00-80A-UHL3	00	80	120192
	Fuse PPN-33-X1-00-100A-UHL3	00	100	120194
	Fuse PPN-33-X1-00-125A-UHL3	00	125	120196
	Fuse PPN-33-X1-00-160A-UHL3	00	160	120197
	Fuse PPN-35-X1-1-125A-UHL3	1	125	120235
	Fuse PPN-35-X1-1-160A-UHL3	1	160	120236
	Fuse PPN-37-X1-2-100A-UHL3	2	100	120244
	Fuse PPN-37-X1-2-160A-UHL3	2	160	120245
	Fuse PPN-37-X1-2-250A-UHL3	2	250	120247
	Fuse PPN-37-X1-2-315A-UHL3	2	315	120248
	Fuse PPN-37-X1-2-400A-UHL3	2	400	120251
	Fuse PPN-39-X1-3-400A-UHL3	3	400	120261
	Fuse PPN-41-X1-4A-1600A-UHL3	4A	1600	120272

Additional devices

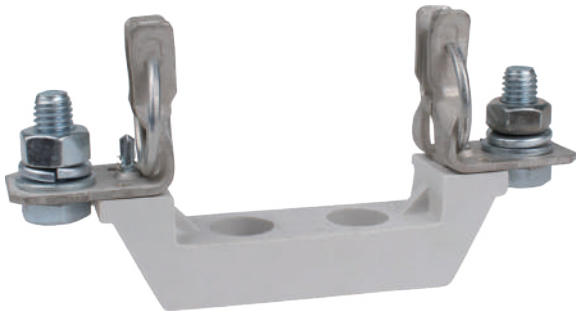

Base PPN-00-I2-UHL3-KEAZ

Base PPN-0-I2-UHL3-KEAZ

Base PPN-1-I2-UHL3-KEAZ

Base PPN-2-I2-UHL3-KEAZ

Base PPN-3-I2-UHL3-KEAZ

Base PPN-00-I2-UHL3-KEAZ

Removal handle PPN/PN2-F-UHL3-KEAZ

Removal handle PPN/PN2-UHL3-KEAZ

Overall and mounting dimensions and weight

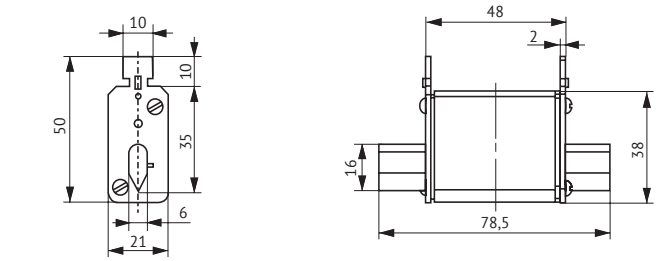

Fuse
PPN-33 clearance 00C

Weight 0.12 kg

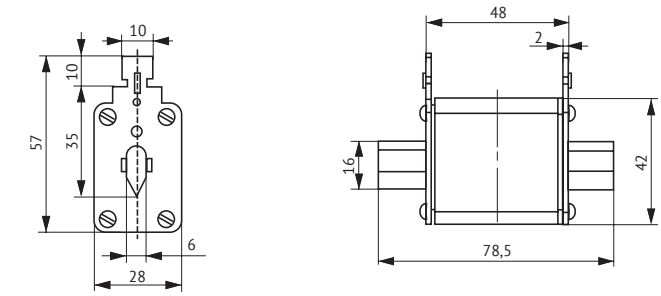

Fuse
PPN-33 clearance 00C

Weight 0.16 kg

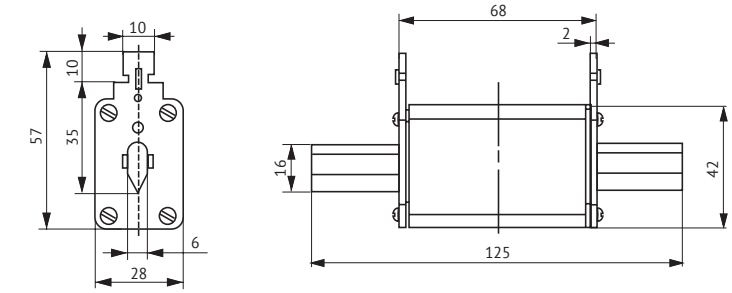

Fuse
PPN-33 clearance 00C

Weight 0.22 kg

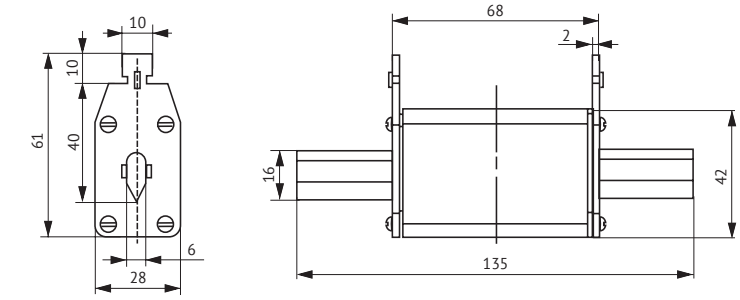

Fuse
PPN-35 clearance 1 (6 - 160 A)

Weight 0.23 kg

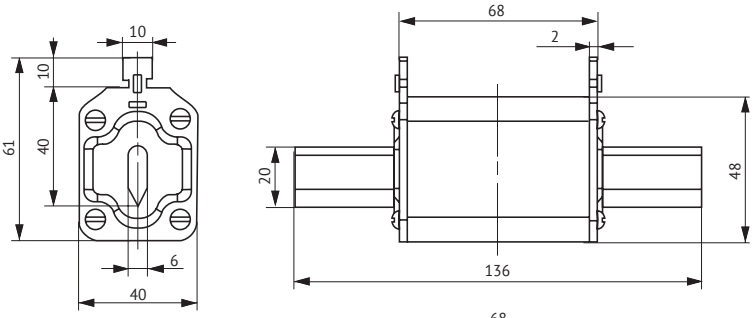

Fuse
PPN-35 clearance 1 (200 - 250 A)

Weight 0.36 kg

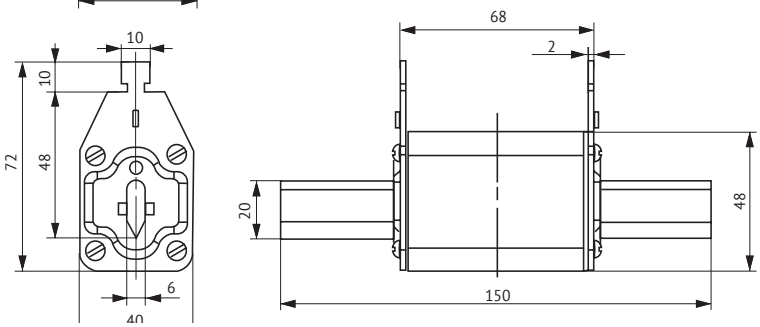

Fuse
PPN-37 clearance 2 (40 - 250 A)

Weight 0.38 kg

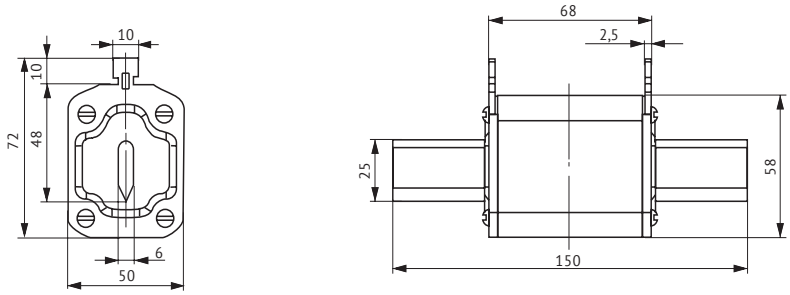

Fuse
PPN-37 clearance 2 (315 - 400 A)

Weight 0.56 kg

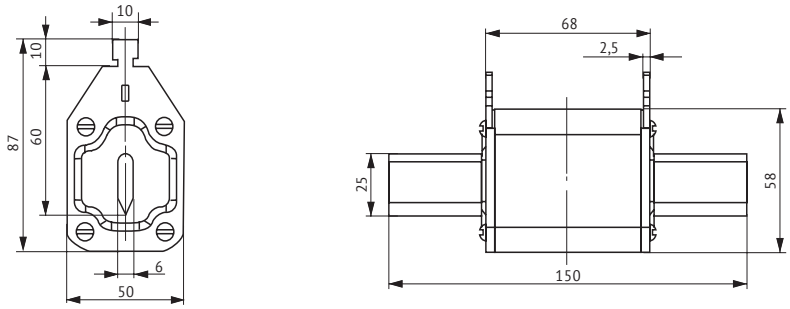

Fuse
PPN-39 clearance 3 (100 - 400 A)

Weight 0.57 kg

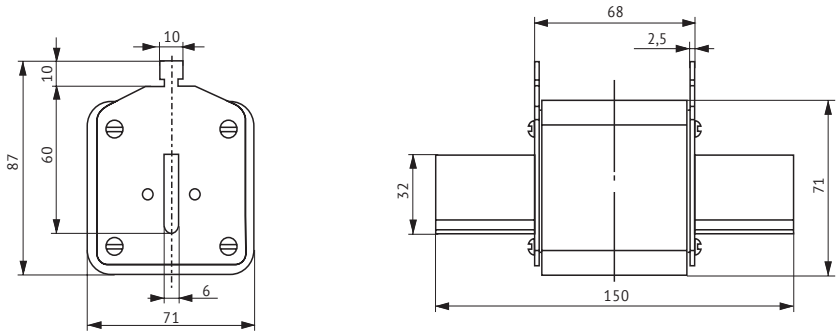

Fuse
PPN-39 clearance 3 (500 - 630 A)

Weight 0.93 kg

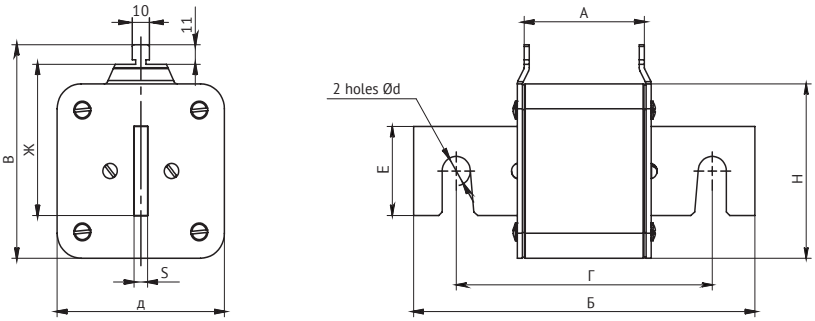

Fuse
PPN-41 clearance 4 (630 - 1250 A)

Type of Fuse	Clearance	Dimention, mm									Weight, kg
		Б	В	Г	Д	Е	d	Ж	S		
PPN-41 (630 A)	4	68	200	87	150	71	35	16,5	60	6	1,1
PPN-41 (800-1000 A)		72		110		80	50		85	8	1,63
PPN-41 (1250 A)		70		120		98					2,12

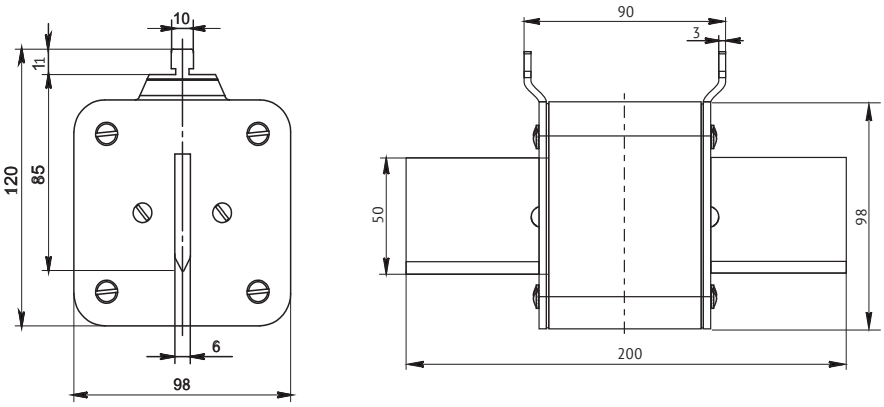

Fuse
PPN-41 clearance 4a (400 - 1250 A)

Weight 2.2 kg

Fuses installed in the bases I1V; I1

Fuses PPN-33, with clearances 00C and 00, installed in I1V bases (with fastening of lead wires under a screw)

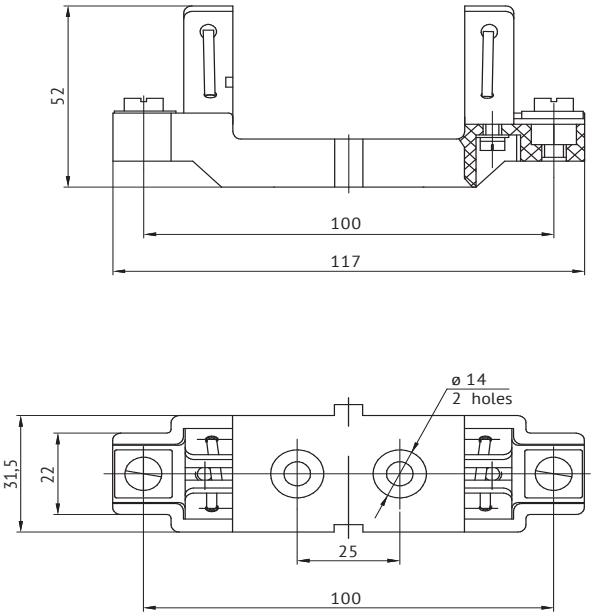

Fuses PPN-33, with clearances 00C and 00, installed in I1 bases (with fastening of lead wires under a nut)

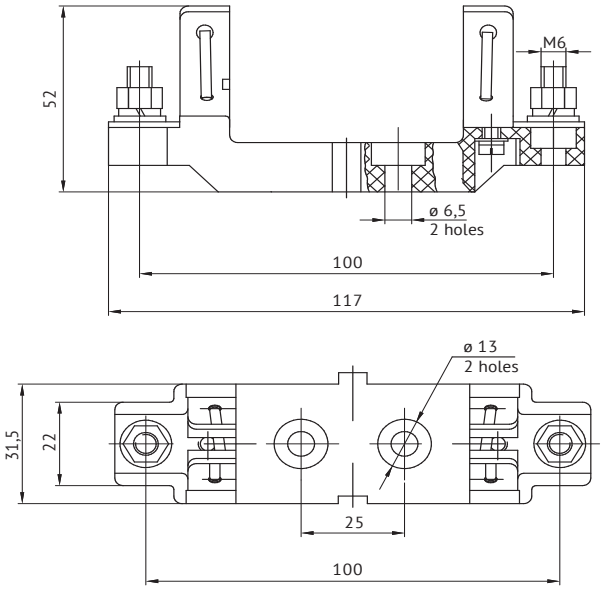

Fuses PPN-33, PPN-35, PPN-37, PPN-39 with clearances 0, 1, 2 and 3, installed in I1 bases

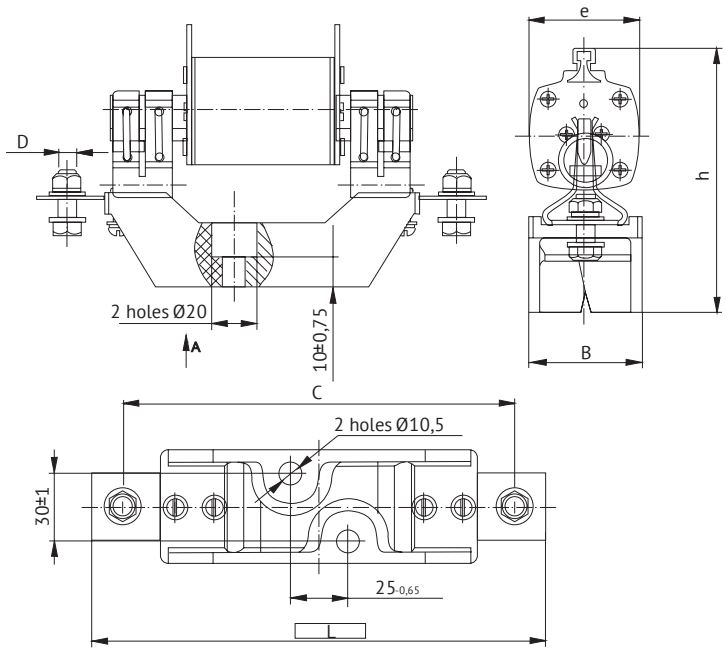

Type	Clearance of fuse link	Designation of base	Dimention, mm						Weight, kg, max
			L	C	D	B	e (max)	h (max)	
PPN-33	0	I1	202+3,5	175+1,5	M10	50	30	105	0,65
PPN-35	1						52	115	0,7
PPN-37	2		225+3,5	200+1,5		60	60	125	1,1
PPN-39	3		241+3,5	210+1,5	M12	60	66	135	2,0

Note: clearance 00 Fuses can be used in bases I1V and I1 up to and including rated current 100 A

Base holders PPN (version I2)

clearance 00C, 00

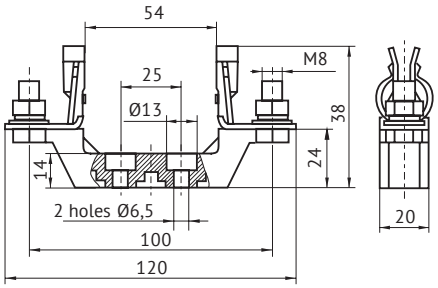

clearance 0 m=0.13 kg

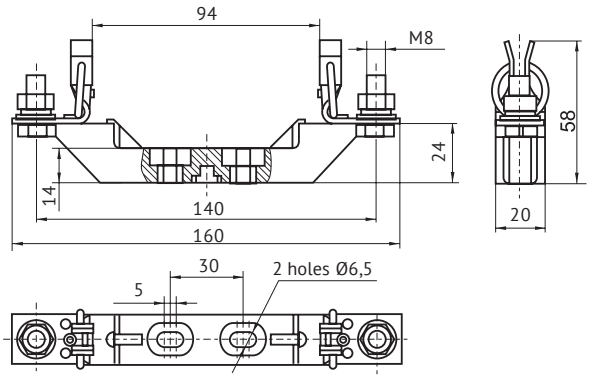

clearance 1, 2, 3

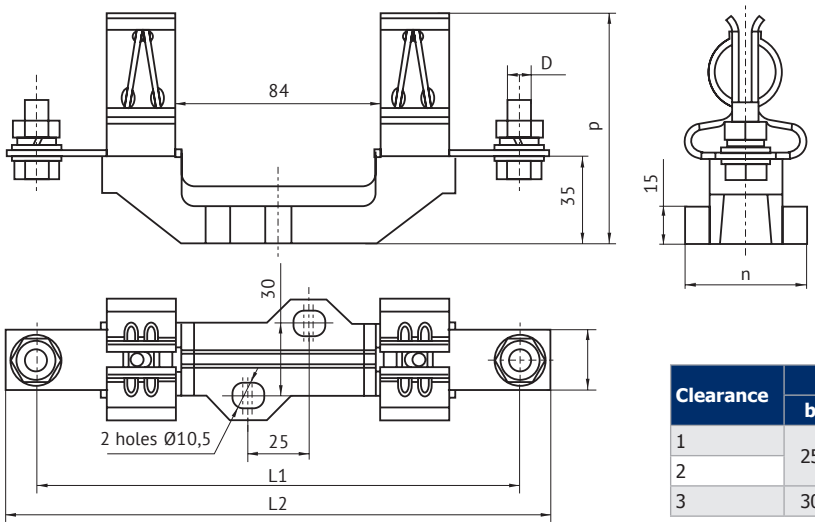

Clearance	Dimention, mm						Weight, kg
	b	L1	L2	n	p	D	
1	25	175	200	50	75	M10	0,35
2		200	225		95		0,48
3	30	210	245	52		M12	0,68

clearance 4 m=1.68 kg

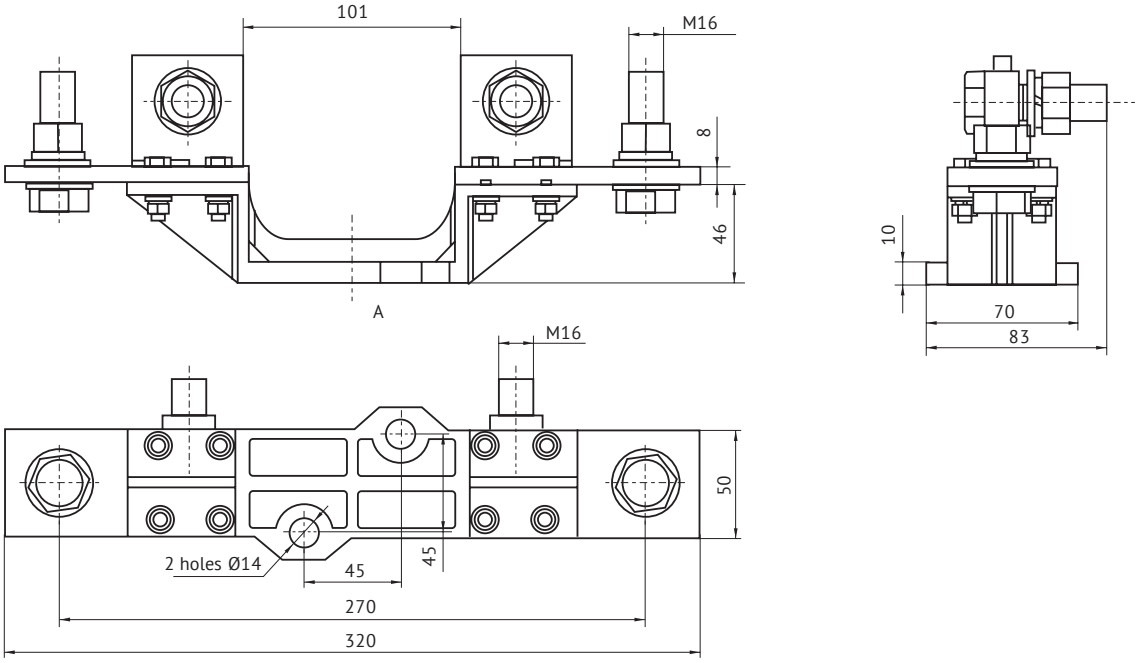

Characteristics of Fuses

Zone of time-current characteristics

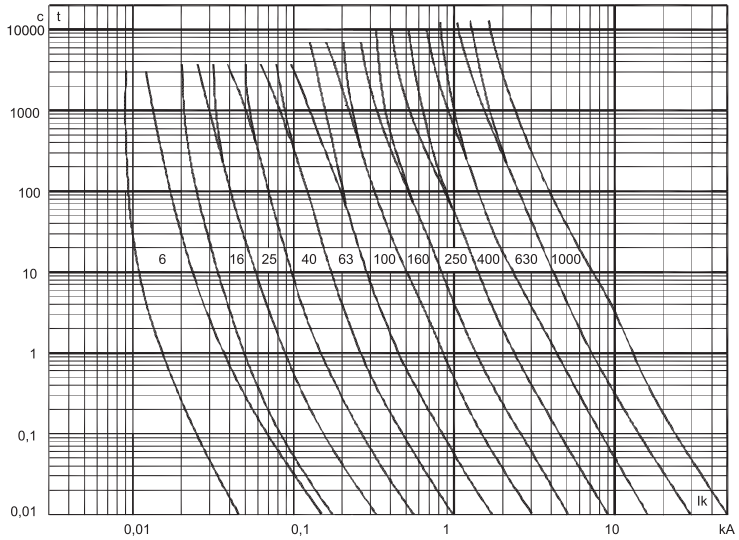

I_K - expected current (acting value)

Zone of time-current characteristics

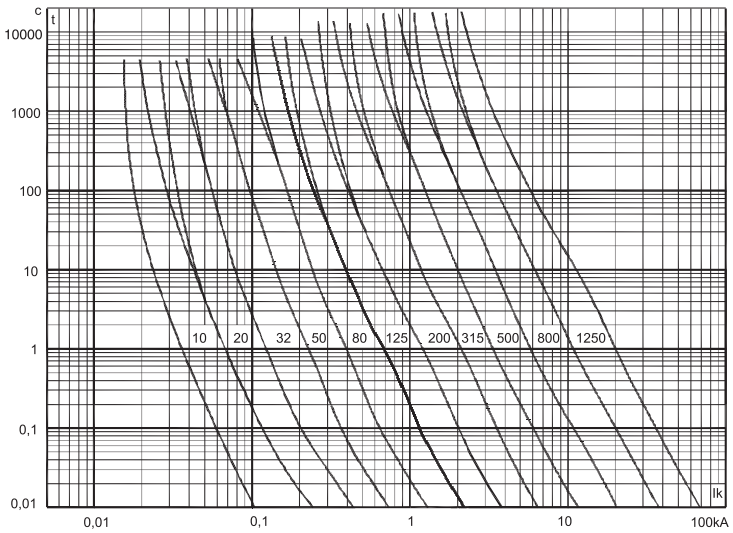

I_K - expected current (acting value)

Transmission Current Characteristics

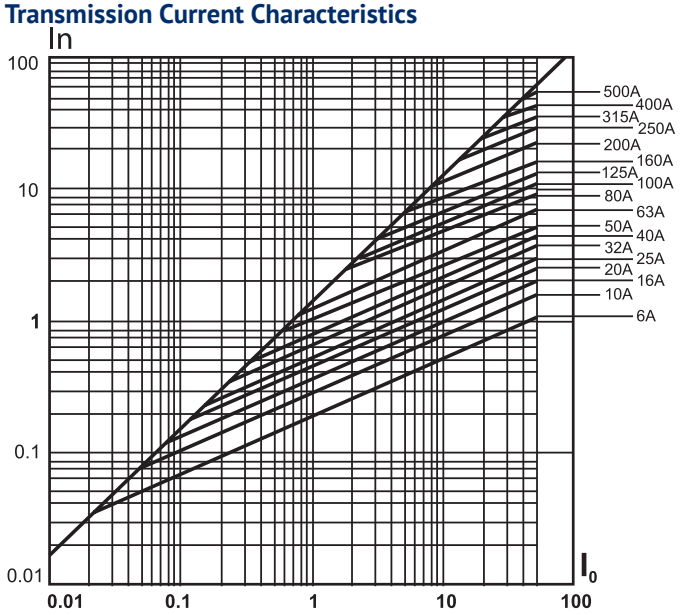

I_0 - shutdown current, kA
I_n - current passed by the fuse, kA

4 START-CONTROL DEVICES

Contactors, starters and thermal motor protectors

Electromagnetic starters of the PML series

TU3420-091-05758109-2016

UP TO 800 A | 660 V AC | -40°C +55°C | SELF-EXTINGUISHING | IP00 IP20 IP40 IP54 | 9 STANDARD SIZES

PML series electromagnetic contactors (hereinafter referred to as "contactors") are intended for use as switching devices in electric drive control circuits, mainly in stationary installations for remote
start-up by direct connection to the network, stopping and reversing three-phase asynchronous electric motors with a short-circuited rotor in electrical installations up to 660 V AC, 50 and 60 Hz.
Contactors of the PML series can be used in conjunction with the thermal relays of the RTL series, providing protection of the controlled electric motors against currents of continuous overloads of unacceptable duration and from the currents arising when one of the phases breaks.

Benefits

- Implementation of any technical solutions
  - full range of products for currents from 10 to 800 A;
  - it is possible to increase the number of auxiliary contacts due to the PKL and PKB attachments. (Information on p. 390 of the catalog "Thermal Overload Relays RTL Series and Accessories for PML and PM12").
- Products are ideally adapted for all types of warehouses:
  - a large and easy-to-read label makes it easier for the warehouse staff to navigate through the products;
  - for the automated processing by WMS systems, the products have unique product codes and bar codes provided.
- Ensuring reliable operation and safety of operation
  - reliable fixation of conductors of any shape, preventing self-unscrewing;
  - use of PML series contactors with a DC coil provides efficient energy saving.

Design features

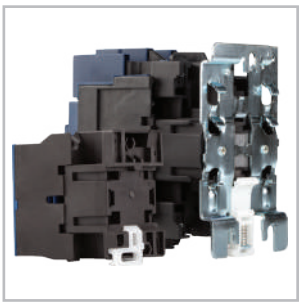

Universal mounting method for both DIN-rail and mounting plate.

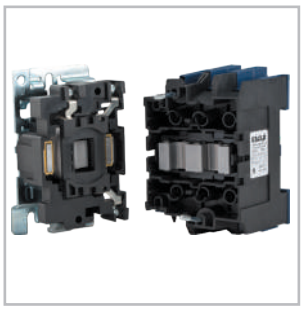

The optimum mode of operation, the absence of noise and increased reliability of operation is ensured by the use of special technology for manufacturing the magnetic system of contactors.

The contactor has a high wear resistance and a small value of contact resistance of the contacts due to the use of silver-based contact parts and coatings on the contact group.

Possibility of operation in harsh Russian conditions at ambient temperatures from -40 to + 55 °C.

Wide range of contactors for the degree of protection: IP00, IP20, IP40 IP54 allows you to choose a device for placement in all conditions.

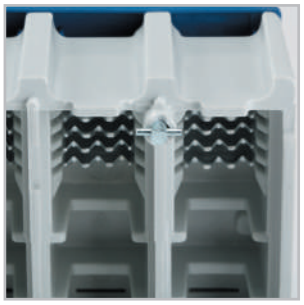

Possibility of installation in places with constant working vibration due to fastening of the top cover with screws with fixation, excluding self-unscrewing.

Ability to provide operational control of the state of the contact group based on the degree of wear of the notches on the contacts.

Simplicity of work when removing the control coils without the use of special tools, by inserting the lock on the coil into the contactor case.

The design of contactors for rated currents above 100 A allows to simultaneously install two additional attachments in any set, which expands the capabilities of the auxiliary circuit.

High rigidity of the structure and reduction of mounting errors for contactors with rated currents over 100 A is provided by the presence of a factory connection in the main circuit, installation of contactors on two metal rails and mechanical interlocking.

Designation structure

Contactor PML-MX_1 $X_2X_3X_4$ -X_5A- X_6X_7 -UHL4-B-KEAZ

Contactor	- Product group
PML	- Series
M	- Mini contactor
X_1	- Designation of rated current: 1 - 6 A, 2 - 9 A, 3 - 12 A
X_2	- Version acc. to the purpose: 1 - non-reversing; 5 - reversing
X_3	- Version acc. to the protection degree: 0 - IP00, 6 - IP20
X_4	Auxiliary contacts

Value	Type of current control circuit	Number of contacts
0	AC	1з
1		1р

X_5	- Rated operating current, A
X_6	- Rated control circuit voltage, V
X_7	- Type of current control circuit
UHL4	- Climatic category UHL and placement category according to GOST 15150
B	- Version on wear resistance
KEAZ	- Trademark

Contactor PML-$X_1X_2X_3X_4$DM1K-X_5A-X_6X_7-UHLX_8-X_9-KEAZ

Contactor	- Product group
PML	- Series
X_1	- Value of the contactor depending on the rated current: 1 - 10 A and 16 A, 2 - 25 A and 32 A, 3 - 40 A and 50 A, 4 - 63 A and 80 A, 5 - 100 A and 125 A, 6 - 160 A, 7 - 250 A, 8 - 400 A, 9 - 630 and 800 A
X_2	- Version acc. to the purpose: 1 - non-reversing; 5 - reversing with mechanical interlock
X_3	- Version acc. to the protection degree: 0 - IP00, 1 - IP54, 4 - IP40, 6 - IP20
X_4	- Number and design of the auxiliary circuit contacts

Value	Type of current control circuit	Contactors for currents 10, 16, 25, 32 A	Contactors for currents 40, 63, 80, 100 A	Contactors for currents 125, 160, 250, 400, 630, 800 A
0	AC	1з, 1з+1р*	1з+1р	1з+1р**
1		1р	-	2з+2р**
2		-	-	3з+3р**
3		-	-	3з+1р**
4		-	-	5з+1р**
5	DC	1з	1з+1р	-
6		1р	-	-

** For upgraded reversing contactors*
*** For currents of 125-800 A it is provided with installation of the PKL contact attachments*

D	- Contactor with rated current: 16 A - for 1 value, 32 A - for 2 value, 80 A - for 4 value, 100 A - for 5 value,
M	- Version of contactors with the possibility of mounting both on a standard rail and screws on the plane
1	- Contactor with a rated current of 50 A for 3 value
K	- Special contactor for switching the capacitive loads
X_5	- Rated operating current, A
X_6	- Control circuit voltage, V
X_7	- Type of current control circuit (AC, DC)
UHLX_8	- Climatic category UHL and placement category (2, 4) according to GOST 15150
X_9	- Version on wear resistance (A, B, V)
KEAZ	- Trademark

Example of recording contactor designation for rated current 10 A, performance for wear resistance B, non-reversing, degree of protection IP20, with 1 "з" auxiliary contact, with switching coil for voltage of 220 V, frequency 50 Hz when ordering it and in the documentation of another product:
Contactor PML-1160M-10A-220AC-UHL4-B-KEAZ

Specifications

PML mini-contactors with AC control coil

Parameter name	Parameter designation					
Series						
	PML-M1160M	PML-M1161M	PML-M2160M	PML-M2161M	PML-M3160M	PML-M3161M
Type of main circuit current	alternating					
Rated current, A	6		9		12	
Motor power (AC-3) at 380V 50 Hz, kW	3		4		5,5	
Auxiliary contacts «з» - closing «р» - opening	1 «з»	1 «р»	1 «з»	1 «р»	1 «з»	1 «р»
Version	non-reversing					
Type of climate version	UHL-4					
Degree of protection	IP00	IP00	IP00	IP00	IP00	IP00
Execution on switching wear resistance, million cycles (AC-3)	B-1					
Execution on mechanical wear resistance, million cycles	B-10					
Maximum frequency of switching on without load / with load, switching on per hour (AC-3)	3600/2400					
Rated operating current, A (AC-3) up to 380 V	6		9		12	
Rated operating current, A (AC-3) at 660 V	3.8		5		6.5	
Rated operating current, A (AC-1)	16		20			
Rated operating current, A (AC-4) up to 380 V	1.5		3.5		5	
Rated operating current, A (AC-4) at 660 V	-		1.5		2	
Rated voltage of the main circuit, V	up to 660					
Rated voltage of control circuit of alternating current with frequency of 50 Hz, 60 Hz, V	24, 36, 40, 42, 48, 110, 120, 127, 220, 230, 240, 380, 400, 415, 440, 480, 500, 660					
Rated insulation voltage, V	660					
Power consumed by the coil						
enabling, W	30					
holding, W	4,6					
Contactor switching time, ms	17±8					
Dimensions						
Overall (HxWxD), mm	49x45x57		59x46x58			
Mounting, mm	40x34 (4 screws M4)		50x35 (4 screws M4)			
Weight, max kg	0,2					

PML contactors with AC control coil

Parameter name	Parameter designation													
Series	 													
	PML-1100	PML-1160M	PML-1101	PML-1161M	PML-1500	PML-1501	PML-1560M	PML-1561M	PML-1100ДМ	PML-1160ДМ	PML-1101ДМ	PML-1161ДМ	PML-1560ДМ	PML-1561ДМ
Type of main circuit current	alternating													
Rated current, A	10								16					
Motor power (AC-3) at 380V 50 Hz, kW	4,0								7,5					
Auxiliary contacts «з» - closing «р» - opening	1 «з»		1 «р»		1 «з»	1 «р»	1 «з»	1 «р»	1 «з»		1 «р»		1 «з»	1 «р»
Version	non-reversing				reversing				non-reversing				reversing	
Type of climate version	UHL-4													
Degree of protection	IP00	IP20	IP00	IP20	IP00		IP20		IP00	IP20				
Execution on switching wear resistance, million cycles (AC-3)	B-1,5								B-1,0					
Execution on mechanical wear resistance, million cycles	B-10				A-20 B-10				B-10					
Maximum frequency of switching on without load / with load, switching on per hour (AC-3)	3600/2400								3600/1200					
Rated operating current, A (AC-3) up to 380 V	10								16					
Rated operating current, A (AC-3) at 660 V	6								12					
Rated operating current, A (AC-1)	20								32					
Rated operating current, A (AC-4) up to 380 V	3,5								7,7					
Rated operating current, A (AC-4) at 660 V	1,5								3,8					
Rated voltage of the main circuit, V	up to 660													
Rated voltage of control circuit of alternating current with frequency of 50 Hz, 60 Hz, V	24, 36, 40, 42, 48, 110, 120, 127, 220, 230, 240, 380, 400, 415, 440, 480, 500, 660													
Rated insulation voltage, V	660													
Power consumed by the coil														
switching on, VA	70													
hold, VA	8													
Contactor switching time, ms	17±8													
Dimensions														
Overall (HxWxD), mm	76x47x82				78x105x82				76x47x87				78x105x87	
Mounting, mm	50x35 (4 screws M4)				50x95 (6 screws M4)				50x35 (4 screws M4)				50x95 (6 screws M4)	
Weight, max kg	0,4				0,9				0,4				0,9	

PML contactors with AC control coil

Parameter name	Parameter designation											
Series	 											
	PML-2100	PML-2160M	PML-2101	PML-2161M	PML-2500	PML-2560M	PML-2501	PML-2561M	ПМЛ-2160ДМ	ПМЛ-2161ДМ	ПМЛ-2560ДМ	ПМЛ-2561ДМ
Type of main circuit current	alternating											
Rated current, A	25								32			
Motor power (AC-3) at 380V 50 Hz, kW	11								15			
Auxiliary contacts «з» - closing «р» - opening	1 «з»		1 «р»		1 «з»		1 «р»		1 «з»	1 «р»	1 «з»	1 «р»
Version	non-reversing				reversing				non-reversing		reversing	
Type of climate version	UHL-4											
Degree of protection	IP00	IP20	IP00	IP20	IP00	IP20	IP00	IP20	IP20			
Execution on switching wear resistance, million cycles (AC-3)	B-1,0											
Execution on mechanical wear resistance, million cycles	B-10											
Maximum frequency of switching on without load / with load, switching on per hour (AC-3)	3600/1200											
Rated operating current, A (AC-3) up to 380 V	25								32			
Rated operating current, A (AC-3) at 660 V	16								21			
Rated operating current, A (AC-1)	40								50			
Rated operating current, A (AC-4) up to 380 V	8,5								12			
Rated operating current, A (AC-4) at 660 V	4,4								7,5			
Rated voltage of the main circuit, V	up to 660											
Rated voltage of the AC control circuit of 50 Hz 60 Hz, V	24, 36, 40, 42, 48, 110, 120, 127, 220, 230, 240, 380, 400, 415, 440, 480, 500, 660											
Rated insulation voltage, V	660											
Power consumed by the coil												
switching on, VA	110											
hold, VA	11											
Contactor switching time, ms	17±8											
Dimensions												
Overall (HxWxD), mm	86x57x95				90x125x95				86x57x100		90x125x100	
Mounting, mm	48x40 (4 screws M4)				50x111 (6 screws M4)				48x40 (3 screws M4)		50x111 (6 screws M4)	
Weight, max kg	0,57				1,4				0,6		1,4	

PML contactors with AC control coil

Parameter name	Parameter designation									
Series	 									
	PML-3100	PML-3160M	PML-3500	PML-3560M	PML-3160M1	PML-3560M1	PML-4100	PML-4160M	PML-4500	PML-4560M
Type of main circuit current	alternating									
Rated current, A	40				50		63			
Motor power (AC-3) at 380V 50 Hz, kW	18,5		18,5		22		30		30	
Auxiliary contacts «з» - closing «р» - opening	1 «з» + 1 «р»									
Version	non-reversing		reversing		non-reversing	reversing	non-reversing		reversing	
Type of climate version	UHL-4									
Degree of protection	IP00	IP20	IP00	IP20	IP20		IP00	IP20	IP00	IP20
Execution on switching wear resistance, million cycles (AC-3)	B-1,0									
Execution on mechanical wear resistance, million cycles	B-10									
Maximum frequency of switching on without load / with load, switching on per hour (AC-3)	3600/1200									
Rated operating current, A (AC-3) up to 380 V	40				50		63			
Rated operating current, A (AC-3) at 660 V	25				32		40			
Rated operating current, A (AC-1)	60				80					
Rated operating current, A (AC-4) up to 380 V	16				24		25,2			
Rated operating current, A (AC-4) at 660 V	10				12		16			
Rated voltage of the main circuit, V	up to 660									
Rated voltage of control circuit of alternating current with frequency of 50 Hz, 60 Hz, V	24, 36, 40, 42, 48, 110, 120, 127, 220, 230, 240, 380, 400, 415, 440, 480, 500, 660									
Rated insulation voltage, V	660									
Power consumed by the coil										
switching on, VA	200				200					
hold, VA	20				20					
Contactor switching time, ms	22±8				22±8					
Dimensions										
Overall (HxWxD), mm	129x77x116		129x165x116		129x77x116	129x165x116	129x77x116		129x165x116	
Mounting, mm	100x40 (3 screws M6)		100x90 (6 screws M6)		100x40 (3 screws M6)	100x90 (6 screws M6)	100x40 (3 screws M6)		100x90 (6 screws M6)	
Weight, max kg	1,2		2,5		1,2	2,5	1,2		2,5	

PML contactors with AC control coil

Parameter name	Parameter designation					
Series						
	PML-4160ДМ	PML-4560ДМ	PML-5160ДМ	PML-5560ДМ	PML-5100	PML-5500
Type of main circuit current	alternating					
Rated current, A	80		100		125	
Motor power (AC-3) at 380V 50 Hz, kW	37		40		55	
Auxiliary contacts «з» - closing «р» - opening	1 «з» + 1 «р»					
Version	non-reversing	reversing	non-reversing	reversing	non-reversing	reversing
Type of climate version	UHL-4					
Degree of protection	IP20				IP00	
Execution on switching wear resistance, million cycles (AC-3)	B-1,0				B-0,75	
Execution on mechanical wear resistance, million cycles	B-5,0					
Maximum frequency of switching on without load / with load, switching on per hour (AC-3)	3600/750				2400/600	
Rated operating current, A (AC-3) up to 380 V	80		100		125	
Rated operating current, A (AC-3) at 660 V	50		55		86	
Rated operating current, A (AC-1)	100				200	
Rated operating current, A (AC-4) up to 380 V	32		30		40	
Rated operating current, A (AC-4) at 660 V	20		16,5		23	
Rated voltage of the main circuit, V	up to 660					
Rated voltage of control circuit of alternating current with frequency of 50 Hz, 60 Hz, V	24, 36, 40, 42, 48, 110, 120, 127, 220, 230, 240, 380, 400, 415, 440, 480, 500, 660				110, 220, 380	
Rated insulation voltage, V	660					
Power consumed by the coil						
switching on, VA	200				600	
hold, VA	20				85,5	
Contactor switching time, ms	22±8				29±6	
Dimensions						
Overall (HxWxD), mm	129x85x128	129x182x128	129x85x128	129x182x128	163x167x172	163x350x182
Mounting, mm	100x40 (3 screws M6)	100x90 (6 screws M6)	100x40 (3 screws M6)	100x90 (6 screws M6)	115x80 (4 screws M6)	115x330 (4 screws M6)
Weight, max kg	1,4	2,9	1,4	2,9	4,6	9,8

PML contactors with AC control coil

Parameter name	Parameter designation											
Series	 								 			
	PML-6100	PML-6500	PML-7100	PML-7500	PML-8100	PML-8500	PML-8100Д	PML-8500Д	PML-9100	PML-9500	PML-9100Д	PML-9500Д
Type of main circuit current	alternating											
Rated current, A	160		250		400		500		630		800	
Motor power (AC-3) at 380V 50 Hz, kW	75		132		200		250		335		450	
Auxiliary contacts «з» - closing «р» - opening	1 «з» + 1 «р»											
Version	non-reversing	reversing	non-reversing	reversing	non-reversing	reversing	non-reversing	reversing	non-reversing	reversing	non-reversing	reversing
Type of climate version	UHL-4											
Degree of protection	IP00											
Execution on switching wear resistance, million cycles (AC-3)	B-0,75		B-0,5									
Execution on mechanical wear resistance, million cycles	B-5,0											
Maximum frequency of switching on without load / with load, switching on per hour (AC-3)	2400/600											
Rated operating current, A (AC-3) up to 380 V	160		250		400		500		630		800	
Rated operating current, A (AC-3) at 660 V	108		170		303		353		462		486	
Rated operating current, A (AC-1)	200		315		450		630		800		1000	
Rated operating current, A (AC-4) up to 380 V	52		93		140		147		188		295	
Rated operating current, A (AC-4) at 660 V	30		53		80		83		107		110	
Rated voltage of the main circuit, V	up to 660											
Rated voltage of control circuit of alternating current with frequency of 50 Hz, 60 Hz, V	110, 220, 380											
Rated insulation voltage, V	660											
Power consumed by the coil												
switching on, VA	966		840		1500		1500±90		1700			
hold, VA	91,2		150		34,2		34,2		34,2			
Contactor switching time, ms	59±6		48±18		57±17		57±17		57±17			
Dimensions												
Overall (HxWxD), mm	171x167x172	171x350x182	203x202x215	203x450x225	206x213x220	206x485x232,5	238x233x233	206x485x246	304x309x255	304x650x355	304x309x255	304x650x355
Mounting, mm	115x80 (4 screws M6)	115x330 (4 screws M6)	115x96 (4 screws M6)	120x430 (4 screws M6)	180x80 (4 screws M8)	180x465 (4 screws M8)	180x80 (4 screws M8)	180x465 (4 screws M8)	190x625 (4 screws M10)	190x625 (4 screws M10)	190x625 (4 screws M10)	190x625 (4 screws M10)
Weight, max kg	4,7	10	6,6	14,3	7,2	16,3	9,7	21,3	18	41,5	19,5	44,5

PML contactors with DC control coil

Parameter name	Parameter designation											
Series	 								 			
	PML-1165M	PML-1166M	PML-1565M	PML-1566M	PML-1165ДM	PML-1166ДM	PML-1565ДM	PML-1566ДM	PML-2165M	PML-2166M	PML-2565M	PML-2566M
Type of main circuit current	alternating											
Rated current, A	10				16				25			
Motor power (AC-3) at 380V 50 Hz, kW	4,0				7,5				11			
Auxiliary contacts «з» - closing «р» - opening	1 «з»	1 «р»	1 «з»	1 «р»	1 «з»	1 «р»	1 «з»	1 «р»	1 «з»	1 «р»	1 «з»	1 «р»
Version	non-reversing		reversing		non-reversing		reversing		non-reversing		reversing	
Type of climate version	UHL-4											
Degree of protection	IP20											
Execution on switching wear resistance, million cycles (AC-3)	B-1,5				B-1,0							
Execution on mechanical wear resistance, million cycles	B-10											
Maximum frequency of switching on without load / with load, switching on per hour (AC-3)	3600/2400				3600/1200							
Rated operating current, A (AC-3) up to 380 V	10				16				25			
Rated operating current, A (AC-3) at 660 V	6				12				16			
Rated operating current, A (AC-1)	20				32				40			
Rated operating current, A (AC-4) up to 380 V	4				7,7				10			
Rated operating current, A (AC-4) at 660 V	2,4				3,6				6,4			
Rated voltage of the main circuit, V	up to 660											
Control circuit current type	DC											
DC control circuit rate, V	24, 110, 220											
Rated insulation voltage, V	660											
Power consumed by the coil												
switching on, W	8,3								9,5			
hold, W	8,3								9,5			
Contactor switching time, ms	17±8											
Dimensions												
Overall (HxWxD), mm	76x47x116		78x105x116		76x47x122		78x105x122		86x57x131		90x125x131	
Mounting, mm	50x35 (4 screws M4)		50x95 (6 screws M4)		50x35 (4 screws M4)		50x95 (6 screws M4)		48x40 (4 screws M4)		50x111 (6 screws M4)	
Weight, max kg	0,6		1,2		0,6		1,2		0,8		1,7	

PML contactors with DC control coil

Parameter name	Parameter designation								
Series									
	PML-2165ДМ	PML-2166ДМ	PML-2565ДМ	PML-2566ДМ	PML-3165M	PML-3165M1	PML-4165M	PML-4165ДМ	PML-5165ДМ
Type of main circuit current	alternating								
Rated current, A	32				40	50	63	80	100
Motor power (AC-3) at 380V 50 Hz, kW	15				18,5	22	30	37	40
Auxiliary contacts «з» - closing «р» - opening	1 «з»	1 «р»	1 «з»	1 «р»	1 «з» + 1 «р»				
Version	non-reversing		reversing		non-reversing				
Type of climate version	UHL-4								
Degree of protection	IP20								
Execution on switching wear resistance, million cycles (AC-3)	B-1,0								B-0,75
Execution on mechanical wear resistance, million cycles	B-10							B-5	
Maximum frequency of switching on without load / with load, switching on per hour (AC-3)	3600/1200							3600/750	
Rated operating current, A (AC-3) up to 380 V	32				40	50	63	80	100
Rated operating current, A (AC-3) at 660 V	21				25	32	40	50	55
Rated operating current, A (AC-1)	50				60	80		100	125
Rated operating current, A (AC-4) up to 380 V	12				18,5	24	28	37	44
Rated operating current, A (AC-4) at 660 V	7,5				9	12	14	17,3	21,3
Rated voltage of the main circuit, V	up to 660								
Control circuit current type	DC								
DC control circuit rate, V	24, 110, 220								
Rated insulation voltage, V	660								
Power consumed by the coil									
switching on, W	9,5				20				
hold, W	9,5				20				
Contactor switching time, ms	17±8				22±8				
Dimensions									
Overall (HxWxD), mm	86x57x138		90x125x138		129x77x173			129x87x188	
Mounting, mm	48x40 (4 screws M4)		50x111 (6 screws M4)		100x40 (3 screws M6)				
Weight, max kg	0,8		1,75		2,43			2,61	

Item numbers

Appearance	Name	Rated current, Ie, A (AC-3) at 380V	Protection class	Motor power (AC-3) at 380V 50 Hz, kW	Aux. contacts «з» - closing «р» - opening	Item number
PML mini-contactors with AC control coil						
	Contactor PML-M1160-6A-110AC-UHL4-B	6	IP20	3	1 «з»	256602
	Contactor PML-M1160-6A-220AC-UHL4-B		IP20	3	1 «з»	256603
	Contactor PML-M1160-6A-24AC-UHL4-B		IP20	3	1 «з»	256604
	Contactor PML-M1160-6A-36AC-UHL4-B		IP20	3	1 «з»	256605
	Contactor PML-M1160-6A-380AC-UHL4-B		IP20	3	1 «з»	256606
	Contactor PML-M1161-6A-220AC-UHL4-B		IP20	3	1 «р»	256610
	Contactor PML-M1161-6A-380AC-UHL4-B		IP20	3	1 «р»	256613
	Contactor PML-M2160-9A-110AC-UHL4-B	9	IP20	4	1 «з»	256616
	Contactor PML-M2160-9A-220AC-UHL4-B		IP20	4	1 «з»	256617
	Contactor PML-M2160-9A-24AC-UHL4-B		IP20	4	1 «з»	256618
	Contactor PML-M2160-9A-36AC-UHL4-B		IP20	4	1 «з»	256619
	Contactor PML-M2160-9A-380AC-UHL4-B		IP20	4	1 «з»	256620
	Contactor PML-M2161-9A-110AC-UHL4-B		IP20	4	1 «р»	256623
	Contactor PML-M2161-9A-220AC-UHL4-B		IP20	4	1 «р»	256624
	Contactor PML-M2161-9A-380AC-UHL4-B		IP20	4	1 «р»	256627
	Contactor PML-M3160-12A-110AC-UHL4-B	12	IP20	5.5	1 «з»	256630
	Contactor PML-M3160-12A-220AC-UHL4-B		IP20	5.5	1 «з»	256631
	Contactor PML-M3160-12A-24AC-UHL4-B		IP20	5.5	1 «з»	256632
	Contactor PML-M3160-12A-36AC-UHL4-B		IP20	5.5	1 «з»	256633
	Contactor PML-M3160-12A-380AC-UHL4-B		IP20	5.5	1 «з»	256634
	Contactor PML-M3161-12A-220AC-UHL4-B		IP20	5.5	1 «р»	256638
	Contactor PML-M3161-12A-380AC-UHL4-B		IP20	5.5	1 «р»	256641

Appearance	Name	Rated current, Ie, A (AC-3) at 380V	Protection class	Motor power (AC-3) at 380V 50 Hz, kW	Aux. contacts «з» - closing «р» - opening	Version by switching wear resistance, mln of cycles	Item number
PML contactors with AC control coil							
	Contactor PML-1100-10A-220AC-UHL4-B	10	IP00	5,5	1 «з»	B-1,5	110538
	Contactor PML-1160M-10A-220AC-UHL4-B		IP20	5,5	1 «з»	B-1,5	110551
	Contactor PML-1101-10A-220AC-UHL4-B		IP00	5,5	1 «р»	B-1,5	229699
	Contactor PML-1161M-10A-220AC-UHL4-B		IP20	5,5	1 «р»	B-1,5	229702
	Contactor PML-1500-10A-220AC-UHL4-B	10	IP00	5,5	1 «з»	B-1,5	110557
	Contactor PML-1501-10A-220AC-UHL4-B		IP00	5,5	1 «р»	B-1,5	229705
	Contactor PML-1560M-10A-220AC-UHL4-B		IP20	5,5	1 «з»	B-1,5	110566
	Contactor PML-1561M-10A-220AC-UHL4-B		IP20	5,5	1 «р»	B-1,5	229708
	Contactor PML-1100ДМ-16A-220AC-UHL4-B	16	IP20	7,5	1 «з»	B-1,0	138112
	Contactor PML-1160ДМ-16A-220AC-UHL4-B		IP20	7,5	1 «з»	B-1,0	110546
	Contactor PML-1161ДМ-16A-220AC-UHL4-B		IP20	7,5	1 «з»	B-1,0	229722
	Contactor PML-1560ДМ-16A-220AC-UHL4-B		IP20	7,5	1 «з»	B-1,0	110562
	Contactor PML-1561ДМ-16A-220AC-UHL4-B		IP20	7,5	1 «р»	B-1,0	229724
	Contactor PML-2100-25A-220AC-UHL4-B	25	IP00	11	1 «з»	B-1,0	110570
	Contactor PML-2101-25A-220AC-UHL4-B		IP00	11	1 «р»	B-1,0	229727
	Contactor PML-2161M-25A-220AC-UHL4-B		IP20	11	1 «р»	B-1,0	229730
	Contactor PML-2160M-25A-220AC-UHL4-B		IP20	11	1 «з»	B-1,0	110580
	Contactor PML-2500-25A-220AC-UHL4-B		IP00	11	1 «з»	B-1,0	110586
	Contactor PML-2560M-25A-220AC-UHL4-B		IP20	11	1 «з»	B-1,0	110593
	Contactor PML-2501-25A-220AC-UHL4-B		IP00	11	1 «р»	B-1,0	229733
	Contactor PML-2561M-25A-220AC-UHL4-B		IP20	11	1 «р»	B-1,0	229736
	Contactor PML-2160ДМ-32A-220AC-UHL4-B	32	IP20	18,5	1 «з»	B-1,0	110577
	Contactor PML-2560ДМ-32A-220AC-UHL4-B		IP20	18,5	1 «з»	B-1,0	110590
	Contactor PML-3160M-40A-220AC-UHL4-B	40	IP20	18,5	1 «з»+ 1 «р»	B-1,0	110604
	Contactor PML-3500-40A-220AC-UHL4-B		IP00	18,5	1 «з»+ 1 «р»	B-1,0	110614
	Contactor PML-3560M-40A-220AC-UHL4-B		IP20	18,5	1 «з»+ 1 «р»	B-1,0	110618

Appearance	Name	Rated current, Ie, A (AC-3) at 380V	Protection class	Motor power (AC-3) at 380V 50 Hz, kW	Aux. contacts «з» - closing «р» - opening	Version by switching wear resistance, mln of cycles	Item number
	Contactor PML-3160M1-50A-220AC-UHL4-B	50	IP20	22	1 «з»+ 1 «р»	B-1,0	110611
	Contactor PML-3560M1-50A-220AC-UHL4-B		IP20	22	1 «з»+ 1 «р»	B-1,0	110622
	Contactor PML-4100-63A-220AC-UHL4-B	63	IP00	30	1 «з»+ 1 «р»	B-1,0	110626
	Contactor PML-4160M-63A-220AC-UHL4-B		IP20	30	1 «з»+ 1 «р»	B-1,0	110637
	Contactor PML-4500-63A-220AC-UHL4-B		IP00	30	1 «з»+ 1 «р»	B-1,0	110642
	Contactor PML-4560M-63A-220AC-UHL4-B		IP20	30	1 «з»+ 1 «р»	B-1,0	110649
	Contactor PML-4160ДМ-80A-220AC-UHL4-B	80	IP20	37	1 «з»+ 1 «р»	B-1,0	110633
	Contactor PML-4560ДМ-80A-220AC-UHL4-B		IP20	37	1 «з»+ 1 «р»	B-1,0	110645
	Contactor PML-5160ДМ-100A-220AC-UHL4-B	100	IP20	45	1 «з»+ 1 «р»	B-0,75	110653
	Contactor PML-5560ДМ-100A-220AC-UHL4-B		IP20	45	1 «з»+ 1 «р»	B-0,75	110657
	Contactor PML-5100-125A-220AC-UHL4-B	125	IP00	55	1 «з»+ 1 «р»	B-0,75	112913
	Contactor PML-5500-125A-220AC-UHL4-B		IP00	55	1 «з»+ 1 «р»	B-0,75	112915
	Contactor PML-6100-160A-220AC-UHL4-B	160	IP00	75	1 «з»+ 1 «р»	B-0,75	112917
	Contactor PML-6500-160A-220AC-UHL4-B		IP00	75	1 «з»+ 1 «р»	B-0,75	112920
	Contactor PML-7100-250A-220AC-UHL4-B	250	IP00	132	1 «з»+ 1 «р»	B-0,5	112924
	Contactor PML-7500-250A-220AC-UHL4-B		IP00	132	1 «з»+ 1 «р»	B-0,5	112926
	Contactor PML-8100-400A-220AC-UHL4-B	400	IP00	200	1 «з»+ 1 «р»	B-0,5	112923
	Contactor PML-8500-400A-220AC-UHL4-B		IP00	200	1 «з»+ 1 «р»	B-0,5	112919
	Contactor PML-8100Д-500A-220AC-UHL4-B	500	IP00	235	1 «з»+ 1 «р»	B-0,5	283227
	Contactor PML-9100-630A-220AC-UHL4-B	630	IP00	335	1 «з»+ 1 «р»	B-0,5	252113
	Contactor PML-9500-630A-220AC-UHL4-B		IP00	450	1 «з»+ 1 «р»	B-0,5	252119
	Contactor PML-9100Д-800A-220AC-UHL4-B	800	IP00	450	1 «з»+ 1 «р»	B-0,5	252116
	Contactor PML-9500Д-800A-220AC-UHL4-B		IP00	450	1 «з»+ 1 «р»	B-0,5	252122

Appearance	Name	Rated current, Ie, A (AC-3) at 380V	Protection class	Motor power (AC-3) at 380V 50 Hz, kW	Aux. contacts «з» - closing «р» - opening	Version by switching wear resistance, mln of cycles	Item number
PML contactors with DC control coil							
 	Contactor PML-1165M-10A-24DC-UHL4-B	10	IP20	5,5	1 «з»	B-1,5	227144
	Contactor PML-1166M-10A-24DC-UHL4-B		IP20	5,5	1 «р»	B-1,5	246150
	Contactor PML-1565M-10A-24DC-UHL4-B		IP20	5,5	1 «з»	B-1,5	227147
	Contactor PML-1566M-10A-24DC-UHL4-B		IP20	5,5	1 «р»	B-1,5	244636
	Contactor PML-1165ДМ-16A-24DC-UHL4-B	16	IP20	7,5	1 «з»	B-1,0	253192
	Contactor PML-1166ДМ-16A-24DC-UHL4-B		IP20	7,5	1 «р»	B-1,0	253193
	Contactor PML-1565ДМ-16A-24DC-UHL4-B		IP20	7,5	1 «з»	B-1,0	253186
	Contactor PML-1566ДМ-16A-24DC-UHL4-B		IP20	7,5	1 «р»	B-1,0	253189
 	Contactor PML-2165M-25A-24DC-UHL4-B	25	IP20	11	1 «з»	B-1,0	227150
	Contactor PML-2166M-25A-24DC-UHL4-B		IP20	11	1 «р»	B-1,0	246151
	Contactor PML-2565M-25A-24DC-UHL4-B		IP20	11	1 «з»	B-1,0	227153
	Contactor PML-2566M-25A-24DC-UHL4-B		IP20	11	1 «р»	B-1,0	246152
	Contactor PML-2165ДМ-32A-24DC-UHL4-B	32	IP20	18,5	1 «з»	B-1,0	246143
	Contactor PML-2166ДМ-32A-24DC-UHL4-B		IP20	18,5	1 «р»	B-1,0	246144
	Contactor PML-2565ДМ-32A-24DC-UHL4-B		IP20	18,5	1 «з»	B-1,0	253205
	Contactor PML-2566ДМ-32A-24DC-UHL4-B		IP20	18,5	1 «р»	B-1,0	253207
	Contactor PML-3165M-40A-24DC-UHL4-B	40	IP20	18,5	1 «з»+ 1 «р»	B-1,0	253202
	Contactor PML-3165M1-50A-24DC-UHL4-B	50	IP20	22	1 «з»+ 1 «р»	B-1,0	253210
	Contactor PML-4165M-63A-24DC-UHL4-B	63	IP20	30	1 «з»+ 1 «р»	B-1,0	253212
	Contactor PML-4165ДМ-80A-24DC-UHL4-B	80	IP20	37	1 «з»+ 1 «р»	B-1,0	253214
	Contactor PML-5165ДМ-100A-24DC-UHL4-B	100	IP20	45	1 «з»+ 1 «р»	B-0,75	253215

** Not all possible versions are presented in the table, you can find a more complete list on our website or by calling us.*

Overall, installation and mounting dimensions

Mini-contactors PML-M1160, PML-M1161

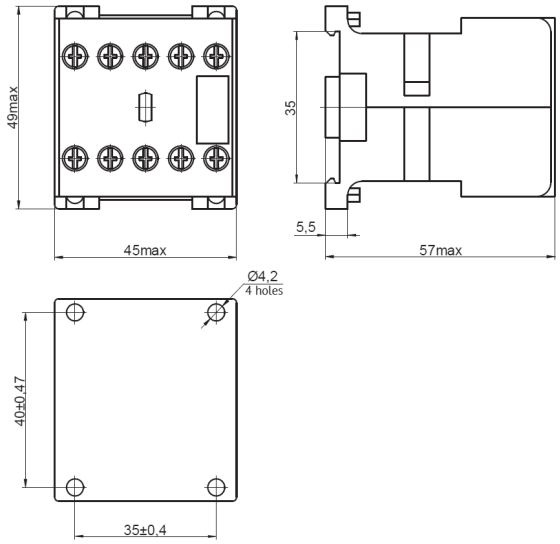

Weight – 0.2 kg
Mounting on 35 mm DIN rail or with M4 screws –2 pcs.

Mini-contactors PML-M2160, PML-M2161, PML-M3160, PML-M3161

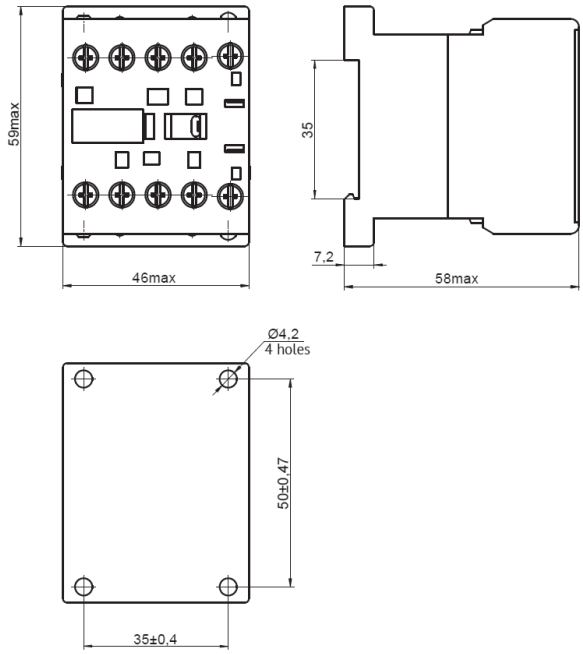

Weight – 0.2 kg
Mounting on 35 mm DIN rail or with M4 screws –2 pcs.

Version 1
Non-reversing contactor for rated currents 10, 16, 25, 32 A

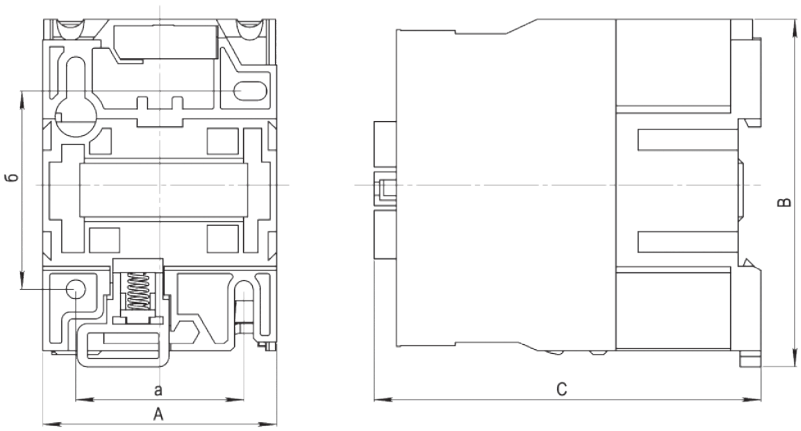

Contactor type	Rated current, A	Dimension, mm					Weight, max, kg
		A	B	C	a	б	
PML-1160M	10	47	76	82	34/35	50/60	0,4
PML-1161M							
PML-1100							
PML-1101							
PML-1160DM	16	47	76	87	34/35	50/60	
PML-1161DM							
PML-1100DM							
PML-1101DM							
PML-2160M	25	57	86	95	40	48	0,57
PML-2161M							
PML-2100							
PML-2101							
PML-2160DM	32	57	86	100	40	48	0,6
PML-2161DM							

Dimensions without limit deviations are maximum.
Contactor mounting M4 screws - 4 pcs.

Non-reversing contactor for rated currents 40, 50, 63, 80, 100 A

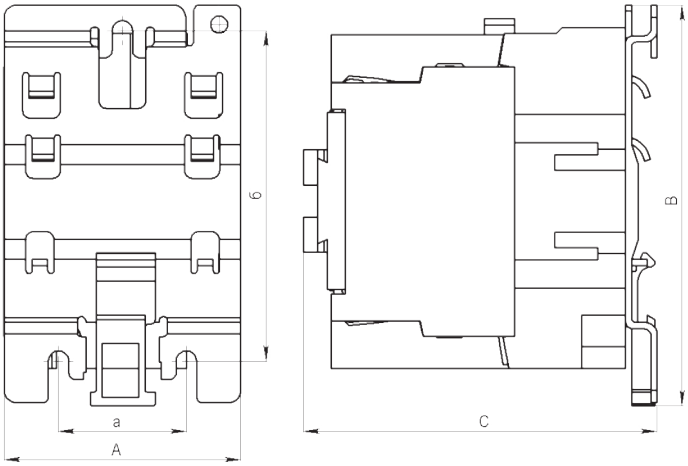

Contactor type	Rated current, A	Dimensions, mm					Weight, kg
		A	B	C	a	б	
PML-3100	40	77	129	116	40	100/110	1,35
PML-3160M							
PML-3160M1	50						
PML-4100	63						
PML-4160M							
PML-4160DM	80	87	129	127	40	100/110	1,6
PML-5160DM	100						

Dimensions without limit deviations are maximum.
Contactor mounting M6 screws - 3 pcs.

Reversing contactor for rated currents 10, 16, 25, 32 A

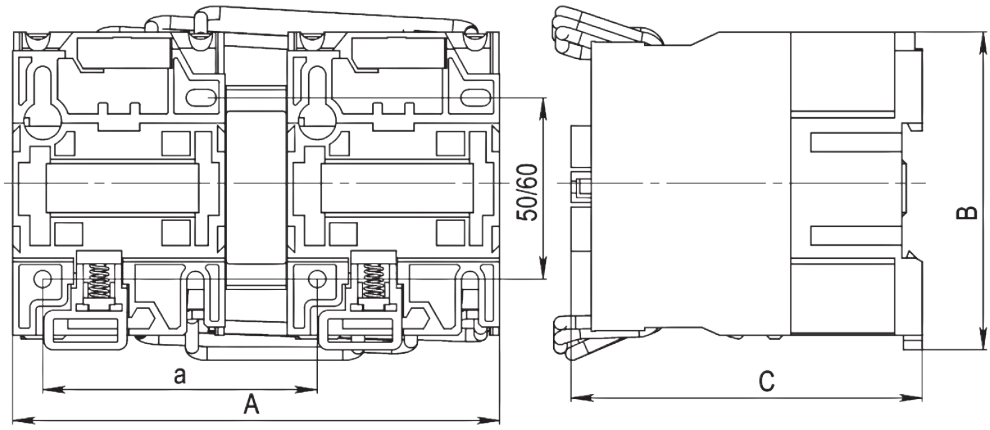

Contactor type	Rated current, A	Dimensions, mm				Weight max, kg
		A	B	C	a	
PML-1560M	10	105	78	82	95	0,9
PML-1561M						
PML-1500						
PML-1501						
PML-1560DM	16	105	78	87	95	
PML-1561DM						
PML-2560M	25	125	90	95	111	1,4
PML-2561M						
PML-2500						
PML-2501						
PML-2560DM	32	125	90	100	111	
PML-2561DM						

Dimensions without limit deviations are maximum.
Contactor mounting M4 screws - 4 pcs.

Reversing contactor for rated currents 40, 50, 63, 80, 100 A

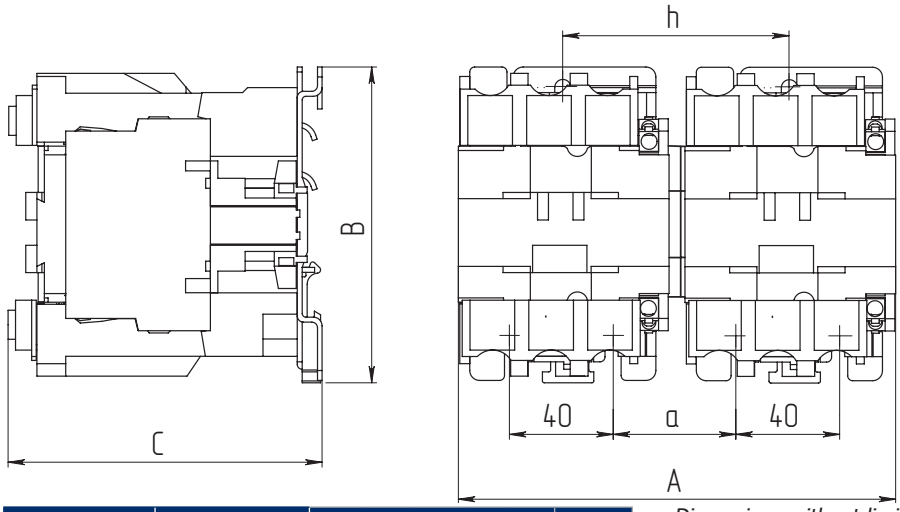

Contactor type	Rated current, A	Dimensions, mm					Weight, kg
		A	B	C	a	h	
PML-3500M	40	165	129	116	50	90	2,9
PML-3560M	40						
PML-3560M1	50						
PML-4500	63						
PML-4560M	63						
PML-4560DM	80	165	129	127	57	96	3,3
PML-5560DM	100						

Dimensions without limit deviations are maximum.
Contactor mounting M6 screws - 6 pcs.

Non-reversing contactors for rated currents 125, 160, 250 A

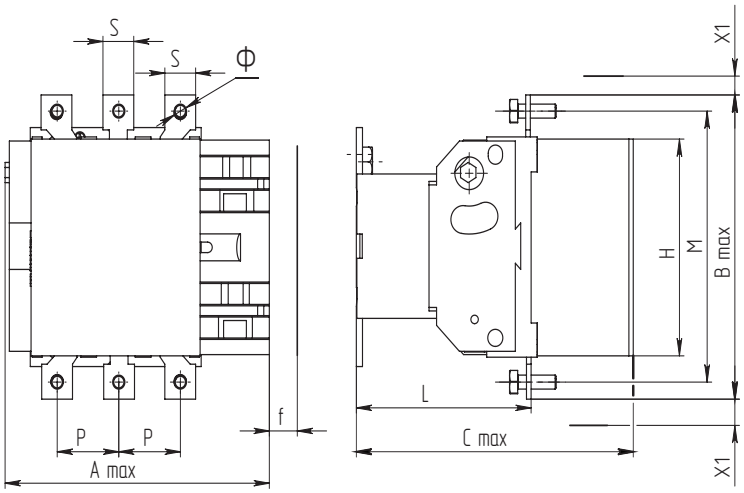

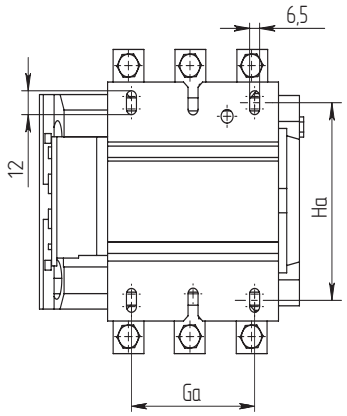

Dimensions without limit deviations are maximum.
Contactor mounting M6 screws - 4 pcs.

Contactor type	Rated current, A	Dimensions, mm												Weight, kg
		A max	B max	C max	P	S	Φ	M	H	L	X	Ga	Ha	
PML-5100	125	167	163	172	37	20	M6	147	124	107	15	80	110-120	4,6
PML-6100	160	167	171	172	40	20	M8	150	124	107	15	80	110-120	4,7
PML-7100	250	202	203	215	48	25	M10	178	147	141	15	96	110-120	6,6

Non-reversing contactors for rated current 400, 500 A

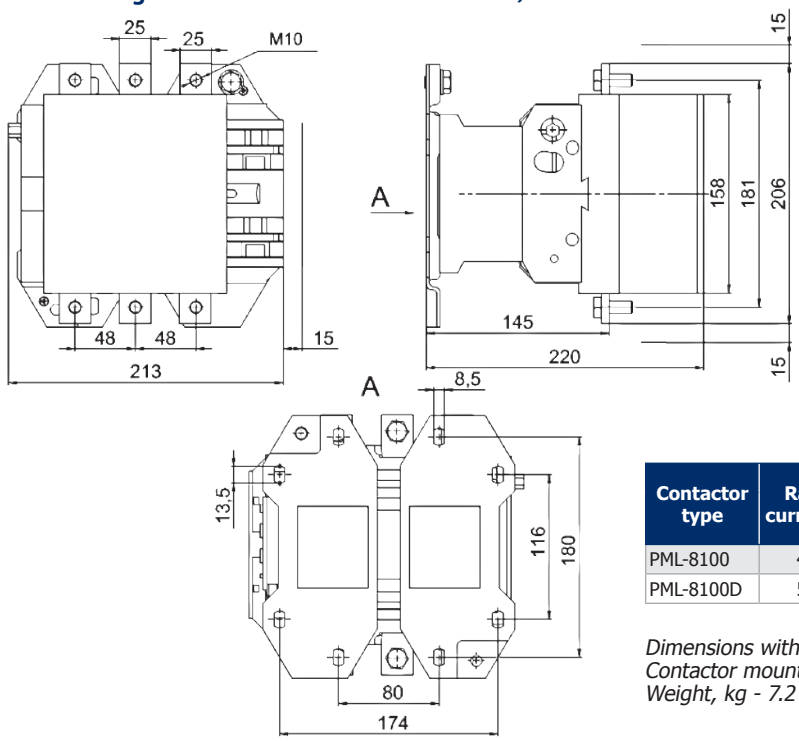

Contactor type	Rated current, A	Dimensions, mm								Weight, kg
		A max	B max	C max	P	S	M	H	L	
PML-8100	400	213	206	220	48	25	181	158	145	7,2
PML-8100D	500	233	238	233	55	30	208	172	146	9,7

Dimensions without limit deviations are maximum.
Contactor mounting M8 screws - 4 pcs.
Weight, kg - 7.2

Non-reversing contactors for rated current 630, 800 A

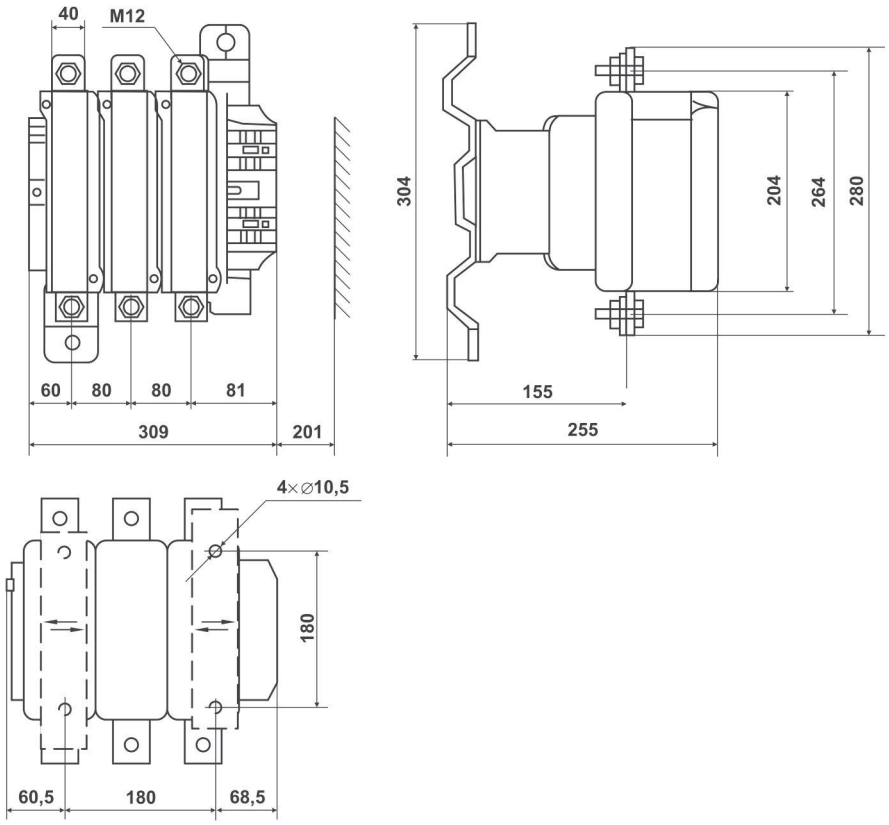

Dimensions without limit deviations are maximum.
Contactor mounting M10 screws - 4 pcs.
Weight, not more than:
PML-9100 - 18.0 kg
PML-9100D - 19.5 kg

Reversing contactors for rated currents 125-800 A

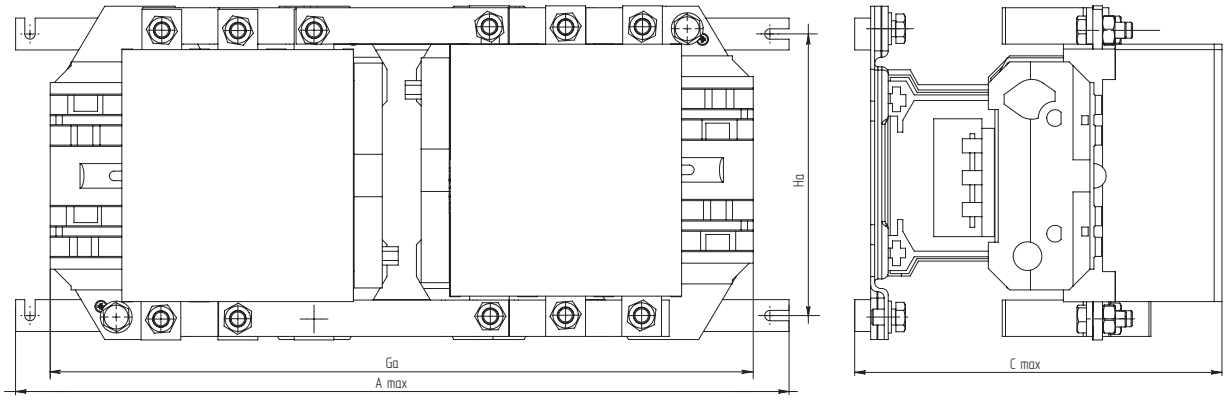

Contactor type	Rated current, A	Dimensions, mm				Weight, kg
		A max	Ga	C max	Ha	
PML-5500	125	350	330	182	115	9,8
PML-6500	160	350	330	182	115	10
PML-7500	250	450	430	225	120	14,3
PML-8500	400	485	485	232,5	180	16,3
PML-8500D	500			245,5	180	21,3
PML-9500	630	650	625	255	190	41,5
PML-9500D	800					44,5

Dimensions without limit deviations are maximum.
Contactor mounting screws:
M6 - 4 pcs. PML-5500, PML-6500, PML-7500;
M8 - 4 pcs. PML-8500; PML-8500D
M10 – 4 pcs. PML-9500, PML-9500D

Non-reversing contactors for rated currents 10, 16, 25, 32 A with DC control

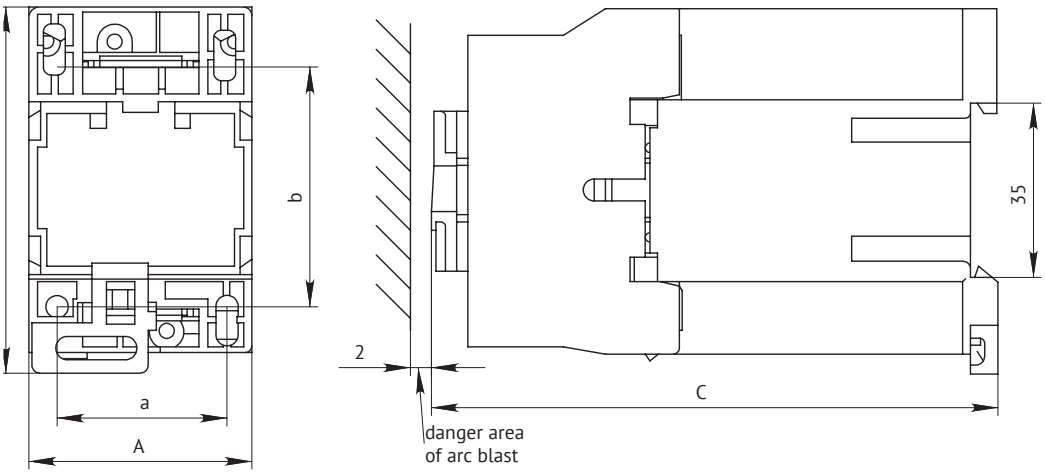

Contactor type	Rated current, A	Dimensions, mm					Weight max, kg
		A	B	C	a	b	
PML–1165M	10	47	76	116	34/35	50/60	0,6
PML–1166M							
PML–1165DM	16	47	76	122	34/35	50/60	0,6
PML–1166DM							
PML–2165M	25	57	86	131	40	48	0,8
PML–2166M							
PML–2165DM	32	57	86	138	40	48	0,8
PML–2166DM							

Dimensions without limit deviations are maximum.
Mounting on 35 mm DIN rail or with screws
M4 –2 pcs.

Non-reversing contactors for rated currents 40, 50, 63, 80, 100 A with DC control

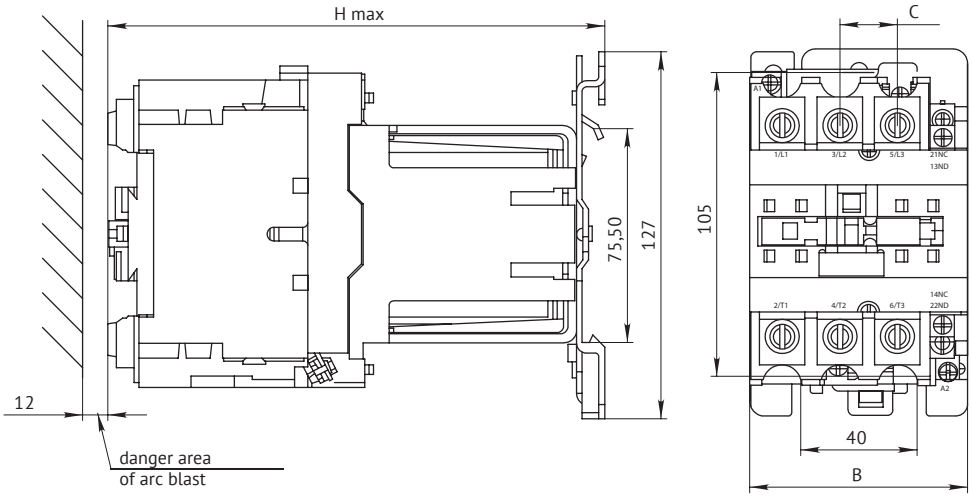

Contactor type	Rated current, A	Dimensions, mm			Weight max, kg
		B	C	H max	
PML–3165M	40	75,5	20	171,8	2,43
PML–3165M1	50				
PML–4165M	63				
PML–4165DM	80	86	23,5	186	2,61
PML–5165DM	100				

Dimensions without limit deviations are maximum.
Mounting on 75 mm DIN rail or with screws
M6 - 3 pcs.

Reversing contactors for rated currents 10, 16, 25, 32 A with DC control

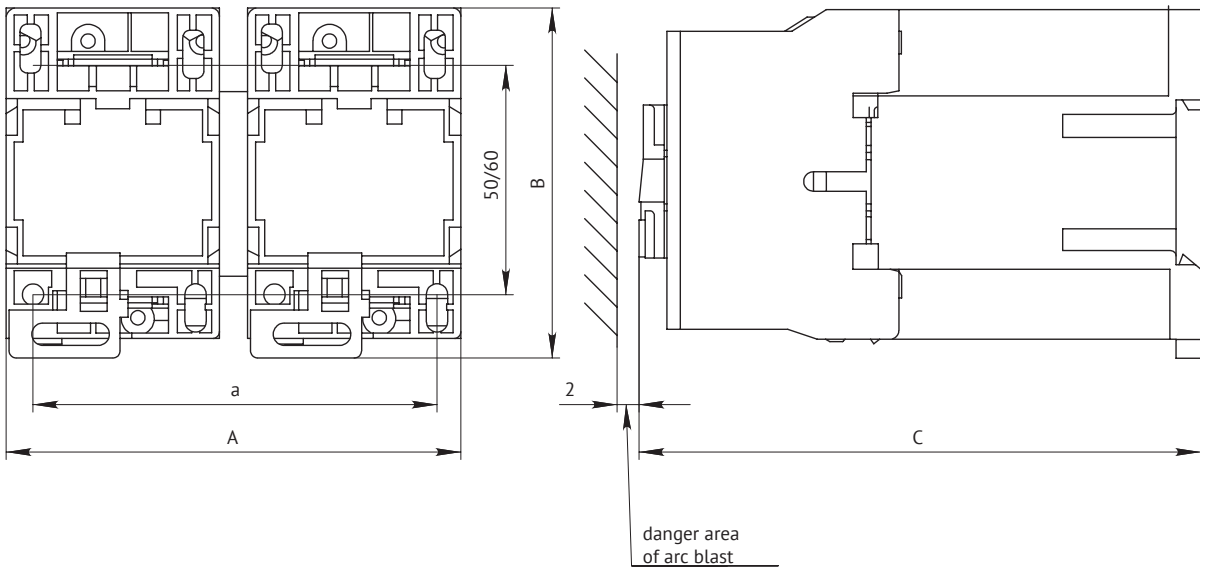

Contactor type	Rated current, A	Dimensions, mm				Weight max, kg
		A	B	C	a	
PML–1565M	10	105	76	116	95	1,2
PML–1566M						
PML–1565DM	16	105	76	122	95	1,2
PML–1566DM						
PML–2565M	25	125	86	131	111	1,7
PML–2566M						
PML–2565DM	32	125	86	138	111	1,75
PML–2566DM						

Dimensions without limit deviations are maximum.
Mounting on 35 mm DIN rail or with screws
M4 - 4 pcs.

Electromagnetic starters of the PML series

TU3420-091-05758109-2016

UP TO 100 A | 660 V AC | -40°C +55°C | SELF-EXTINGUISHING | IP54 | 5 STANDARD SIZES

Electromagnetic starters of the PML series (hereinafter referred to as "starters") are intended for use as switching devices in electric drive control circuits, mainly in stationary installations, for remote start directly connected to the network, stopping and reversing three-phase asynchronous electric motors with a short-circuited rotor at voltages up to 660 V AC current frequency of 50 and 60 Hz.
The starters are equipped with thermal relays of the RTL series TU3425-041 -05758109-2008, which ensures protection of the controlled electric motors against overloads of unacceptable duration and against currents arising from the break of one of the phases.

Benefits

- Implementation of any technical solutions
  - it is possible to increase the number of auxiliary contacts due to the PKL and PKB attachments. (Information on p. 390 of the catalog "Thermal Overload Relays RTL Series and Accessories for PML and PM12");
  - the most modern thermal relays based on a single actuator for different values for currents up to 500A.
- Products are ideally adapted for all types of warehouses:
  - a large and easy-to-read label makes it easier for the warehouse staff to navigate through the products;
  - for the automated processing by WMS systems, the products have unique product codes and bar codes provided.
- Ensuring reliable operation and safety of operation
  - contactors for currents from 40 A are supplied in a metal sheath providing mechanical protection and reliability of the design;
  - reduction of installation time and elimination of errors when connecting the starter due to the complete set of the factory control scheme.

Design features

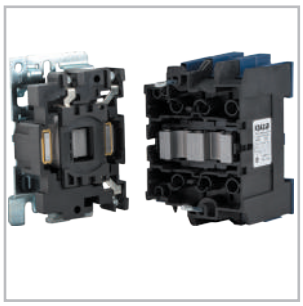

The optimum mode of operation, the absence of noise and increased reliability of operation is ensured by the use of special technology for manufacturing the magnetic system of contactors.

Possibility of operation in harsh Russian conditions at ambient temperatures from -40 to 55°C.

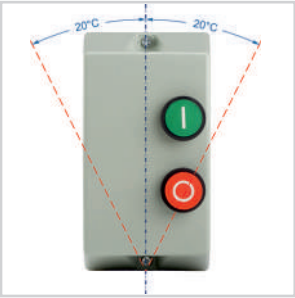

Ample opportunities on the layout of boards by mounting devices both vertically and turning right / left to 20°.

Possibility of use in various operating conditions due to the shell with a degree of protection IP54.

Designation structure

Starter PML-$X_1X_2X_3X_4$D-X_5A-X_6AC-(X_7A)-UHL3-B-KEAZ

Starter	- Product group
PML	- Series
X_1	- A digit indicating the value of the starter depending on the rated current: 1 - 10 A and 16 A, 2 - 25 A and 32 A, 3 - 40 A, 4 - 63 A, 5 - 100 A
X_2	- A digit indicating the target version: 2 - non-reversing
X_3	- A digit indicating the protection degree: 2 - IP54 with "Start" and "Stop" buttons
X_4	- A digit indicating the number and design of the auxiliary circuit contacts:

Value	Rated currents	
	10, 16, 25, 32	40, 63, 100
0	1 «з»	1 «з» + 1 «р»
1	1 «р»	-

D	- Letter indicating starters with rated current: 16 A - for 1 value, 32 A - for 2 value, 100 A - for 5 value,
X_5	- Rated current, A (10, 16, 25, 32, 40, 63, 100)
X_6	- Control voltage, V and type of current
X_7	- Current setting range of the relay, A
UHL3	- Designation of a type of a climatic category in accordance with GOST 15150
B	- Letter indicating wear resistance performance
KEAZ	- Trademark

Example of recording starter designation for rated current 10 A, performance for wear resistance B, non-reversing, degree of protection IP54, with 1 "з" auxiliary contact, with switching coil for voltage of 220 V, frequency 50 Hz, with current setting range of relay (7-10 A) when ordering it and in the documentation of another product:
Starter PML-1220-10A-220AC-(7-10 A)-UHL3-B-KEAZ

Designation structure

Starter PML-$X_1X_2X_3X_4$D-X_5A-X_6AC-(X_7A)-UHL2-B-KEAZ

Starter	- Product group
PML	- Series
X_1	- A digit indicating the value of the starter depending on the rated current: 1 - 10 A and 16 A, 2 - 25 A , 3 - 40 A, 4 - 63 A
X_2	- A digit indicating the target version: 2 — non-reversing, 6 — reversing with electrical and mechanical interlocks, 7 — star-delta
X_3	- Execution by the presence of buttons: 1 - with the "Relay" button 2 - with "Start" and "Stop" buttons 3 - with the "Start" "Stop" buttons and a signal lamp (made only for voltages 127, 220 and 380 V, 50 Hz)
X_4	- Execution according to the number and purpose of the auxiliary circuit contacts:

Value	Rated currents, A	
	10, 16, 25, 40 (with reduced weight and size parameters)	40, 63
0	1«з»	1«з» + 1«р»
1	1«з» + 2«р»	-

Д	- With a rated current of 16 A - for 1 value; with reduced weight and size parameters - for 3 value
X_5	- Rated current, A (10, 16, 25, 32, 40, 63)
X_6	- Control voltage, V and type of current
X_7	- Current setting range of the relay, A
UHL2	- Designation of a type of a climatic category in accordance with GOST 15150
B	- Letter indicating wear resistance performance
KEAZ	- Trademark

Example of recording starter designation for rated current 10 A, performance for wear resistance B, non-reversing, degree of protection IP54, with the "Start" "Stop" buttons and a signal lamp, with 1 "з" auxiliary contact, with switching coil for voltage of 220 V, frequency 50 Hz, with current setting range of relay (7-10 A) when ordering it and in the documentation of another product: Starter PML-1230-10A-220AC-(7-10A)-UHL2-B-KEAZ

Specifications

Parameter name	Parameter designation		
	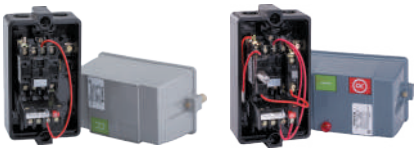		
Series	PML-1210 PML-1230	PML-1210D PML-1230D	PML-2210 PML-2230
Type of main circuit current	alternating		
Rated current, A	10	16	25
Motor power (AC-3) at 380 V 50 Hz, kW	4,0	7,5	11
Auxiliary contacts «з» - closing «р» - opening	1 «з»	1 «з»	1 «з»
Version	non-reversing		
Type of climate version	UHL2		
Degree of protection	IP54		
Execution on switching wear resistance, million cycles (AC-3)	B-1,5	B-1,0	
Execution on mechanical wear resistance, million cycles	B-10		
Maximum frequency of switching on without load / with load, switching on per hour (AC-3)	3600/2400	3600/1200	
Rated operating current, A (AC-3) up to 380 V	10	16	23
Rated operating current, A (AC-3) at 660 V	5	10	15
Rated operating current, A (AC-1)	20	32	40
Rated operating current, A (AC-4) up to 380 V	3,5	7,7	8,5
Rated operating current, A (AC-4) at 660 V	1,5	3,8	4,4
Rated voltage of the main circuit, V	up to 660		
Type of current control circuit	alternating		
Rated control circuit voltage, V	24, 36, 42, 48, 110, 120, 127*, 220*, 240, 380*, 400, 415, 440, 480, 660		
Power consumed by the coil			
switching on, VA	70		110
hold, VA	8		11
Rated insulation voltage, V	660		
Dimensions			
Overall (HxWxD), mm	160x87x116,5	185x101x134	185x101x134
Mounting, mm	140 (2 screws M5)	165 (2 screws M5)	165 (2 screws M5)
Weight, max kg	1,04	1,2	1,2
	1,13	1,29	1,29

Parameter name	Parameter designation		
			
Series	PML-3210 PML-3230	PML-3210Д PML-3220Д PML-3230Д	PML-4210 PML-4230
Type of main circuit current	alternating		
Rated current, A	40		63
Motor power (AC-3) at 380 V 50 Hz, kW	18,5		30
Auxiliary contacts «з» - closing «р» - opening	1 «з» + 1 «р»	1 «з»	1 «з» + 1 «р»
Version	non-reversing		
Type of climate version	UHL2		
Degree of protection	IP54		
Execution on switching wear resistance, million cycles (AC-3)	B-1,0		
Execution on mechanical wear resistance, million cycles	B-10		
Maximum frequency of switching on without load / with load, switching on per hour (AC-3)	3600/1200		
Rated operating current, A (AC-3) up to 380 V	34		53
Rated operating current, A (AC-3) at 660 V	21		43
Rated operating current, A (AC-1)	60		80
Rated operating current, A (AC-4) up to 380 V	18,5		28
Rated operating current, A (AC-4) at 660 V	9		14
Rated voltage of the main circuit, V	up to 660		
Type of current control circuit	alternating		
Rated control circuit voltage, V	24, 36, 42, 48, 110, 120, 127*, 220*, 240, 380*, 400, 415, 440, 480, 660		
Power consumed by the coil			
switching on, VA	200		
hold, VA	20		
Rated insulation voltage, V	660		
Dimensions			
Overall (HxWxD), mm	280x164x166	280x164x170	280x164x166
Mounting, mm	260 (2 screws M5)		260 (2 screws M5)
Weight, max kg	3,1	2,4	3,11
	3,15	2,42	3,16
		2,44	

* Rated control circuit voltage for starters PML-3230, PML-3230Д, PML-3630, PML-3631Д, PML-4230, PML-4630

Parameter name	Parameter designation						
							
Series	PML-1220	PML-1220Д	PML-2220	PML-2220D	PML-3220	PML-4220	PML-5220Д
Type of main circuit current	alternating						
Rated current, A	10	16	25	32	40	63	100
Motor power (AC-3) at 380 V 50 Hz, kW	4,0	7,5	11	15	18,5	30	45
Auxiliary contacts «з» - closing «р» - opening	1 «з»				1 «з» + 1 «р»		
Version	non-reversing						
Type of climate version	UHL3						
Degree of protection	IP54						
Execution on switching wear resistance, million cycles (AC-3)	B-1,5	B-1,0					
Execution on mechanical wear resistance, million cycles	B-10						B-5
Maximum frequency of switching on without load / with load, switching on per hour (AC-3)	3600/2400	3600/1200					3600/750
Rated operating current, A (AC-3) up to 380 V	10	16	23	28	34	53	86
Rated operating current, A (AC-3) at 660 V	5	10	15	18	21	43	56
Rated operating current, A (AC-1)	20	32	40	50	60	80	120
Rated operating current, A (AC-4) up to 380 V	3,5	7,7	8,5	12	18,5	28	44
Rated operating current, A (AC-4) at 660 V	1,5	3,8	4,4	7,5	9	14	21,3
Rated voltage of the main circuit, V	up to 660						
Type of current control circuit	alternating						
Rated control circuit voltage, V	24, 36, 42, 48, 110, 120, 127, 220, 240, 380, 400, 415, 440, 480, 660						
Power consumed by the coil							
switching on, VA	70		110		200		
hold, VA	8		11		20		
Rated insulation voltage, V	660						
Dimensions							
Overall (HxWxD), mm	166x88x140		185x101x142		312x180x181		
Mounting, mm	150 (2 screws M5)		165 (2 screws M5)		200x105 (4 screws M6)		
Weight, max kg	1,3		1,5	1,6	2,4	3,2	4,2

Item numbers

	Name	Rated current, I_e, A (AC-3) at 380 V	Motor power (AC-3) at 380 V 50 Hz, kW	Auxiliary contacts «з» - closing «р» - opening	Execution on switching wear resistance, million cycles	Item number
Climatic category UHL2						
	Starter PML-1210-10A-220AC-(7-10A)-UHL2-B	10	5,5	1 «з»	B-1,5	229712
	Starter ПМЛ-1230-10A-220AC-(7-10A)-UHL2-B		5,5			227122
	Starter ПМЛ-1210Д-16A-220AC-(5,5-8A)-UHL2-B	16	7,5	1 «з»	B-1,0	232971
	Starter ПМЛ-1230Д-16A-220AC-(12-18A)-UHL2-B		7,5			227126
	Starter ПМЛ-2210-25A-220AC-(18-25A)-UHL2-B	25	11	1 «з»		229740
	Starter ПМЛ-2230-25A-220AC-(17-25A)-UHL2-B		11			227130
	Starter ПМЛ-3210-40A-220AC-(30-41A)-UHL2-B	40	18,5	1 «з» + 1«р»		229761
	Starter ПМЛ-3230-40A-220AC-(30-40A)-UHL2-B		18,5			227135
	Starter ПМЛ-4210-63A-220AC-(47-64A)-UHL2-B	63	30	1 «з» + 1«р»		229773
	Starter ПМЛ-4230-63A-220AC-(48-65A)-UHL2-B		30			227138
Climatic category UHL3						
	Starter ПМЛ-1220-10A-220AC-(7-10A)-UHL3-B	10	5,5	1 «з»	B-1,5	110687
	Starter ПМЛ-1220Д-16A-220AC-(12-18A)-UHL3-B	16	7,5		B-1,0	110702
	Starter ПМЛ-2220-25A-220AC-(17-25A)-UHL3-B	25	11			110709
	Starter ПМЛ-2220Д-32A-220AC-(23-32A)-UHL4	32	15			225515
	Starter ПМЛ-3220-40A-220AC-(30-40A)-UHL3-B	40	18,5	1 «з» + 1 «р»		110722
	Starter ПМЛ-4220-63A-220AC-(48-65A)-UHL3-B	63	30			110727
	Starter ПМЛ-5220Д-100A-220AC-(80-93A)-UHL3-B	100	45			110733

** В таблице представлены не все возможные исполнения, с более полным перечнем Вы можете ознакомиться на нашем сайте или позвонив нам в компанию.*

Overall and installation dimensions of starters of climatic categories UHL3

PML-1220, PML-1220D starters for rated currents of 10 and 16 A in a plastic shell

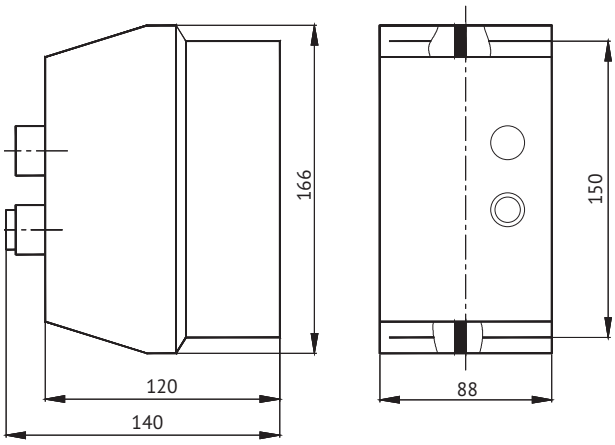

PML-2220, PML-2220D starters for rated currents of 25 and 32 A in a plastic shell

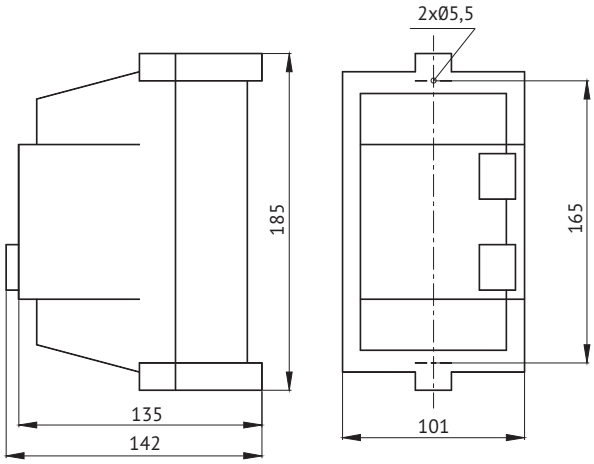

PML-3220, PML-4220, PML-5220D starters for rated currents of 40, 63 and 100 A in a metal shell

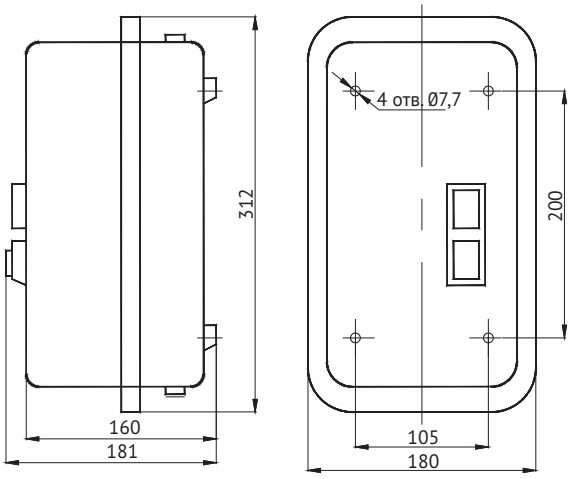

Overall and installation dimensions of starters of climatic categories UHL2

Non-reversing starters of 1 and 2 values in a plastic shell

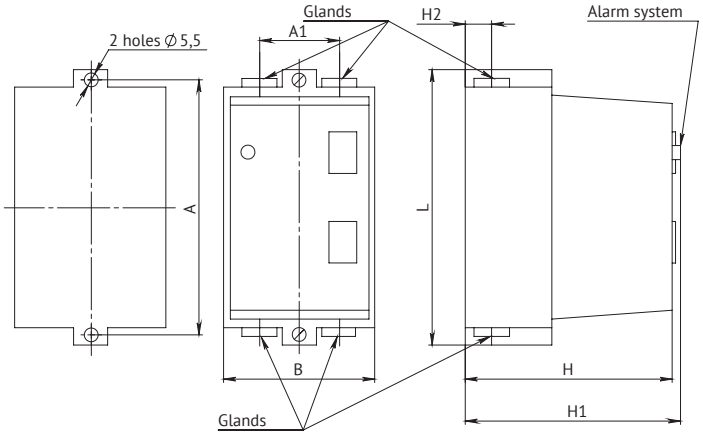

Starter type	A	A1	B	L	H	H1	H2	Screw for fastening	Weight, kg
PML-1210	140 ± 0,4	46 ± 0,3	87 ± 1	160 ± 1	116,5 ± 1	-	18 ± 0,3	M5 - 6g 2 screws	1,04
PML-1220									1,04
PML-1230						124,5 ± 1			1,13
PML-1210D	165 ± 0,4	52 ± 0,3	101 ± 1	185 ± 1	134 ± 1	-	19 ± 0,3		1,20
PML-1220D									1,20
PML-1230D						142 ± 1			1,29
PML-2210						-			1,20
PML-2220									1,20
PML-2230						142 ± 1			1,29

Non-reversing starters of 3 and 4 values in a shell, reversing starters of 3 value with reduced weight and dimensional parameters in a plastic shell

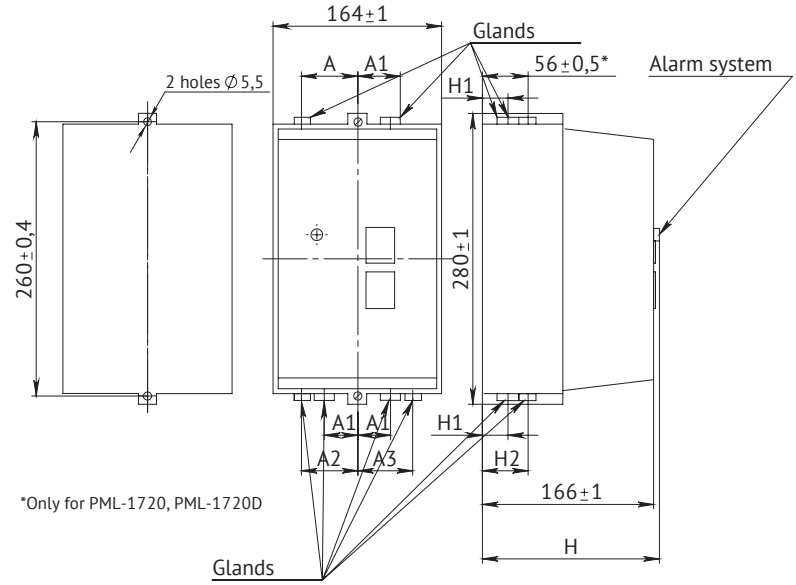

*Only for PML-1720, PML-1720D

Starter type	A	A1	B	L	H	H1	H2	Screw for fastening	Weight, kg
ПМЛ-3210	-	34,5±0,5	-	60,5±0,5	-	31 ± 0,5	59 ± 0,5	M5 - 6g 2 screws	3,100
ПМЛ-3220									3,130
ПМЛ-3230					170,5 ± 1				3,156
ПМЛ-3210D					-				2,400
ПМЛ-3220D									2,420
ПМЛ-3230D					170,5 ± 1				2,440
ПМЛ-4210	42 ± 0,5	42 ± 0,5	-	-	-	44 ± 0,5	-		3,110
ПМЛ-4220									3,140
ПМЛ-4230					170,5 ± 1				3,160

Thermal overload relay RTL and accessories for PML and PM12

UP TO 500 A | 660 V AC | -40°C +55°C | SELF-EXTINGUISHING | IP00 | 5 STANDARD SIZES | EAC

Thermal overload relays of RTL series TU3425-041-05758109-2008 are designed to protect AC motors from current overloads of unacceptable duration, including those that occur during the loss of one of the phases, severe starting conditions and jamming of the rotor. They are used in control systems of load-lifting mechanisms (elevators, cranes, etc.), fans, pumps, heat curtains, furnaces, machine tools, lighting, in automatic failover switch systems (ABP).
Contact attachments PKL, PKB TU3425-045-05758109-2008 are designed to increase the number of auxiliary contacts of contactors.
The time delay attachments PVL TU3425-045-05758109-2008 enable and disable contactors with a time delay from 0.1 to 180 s.

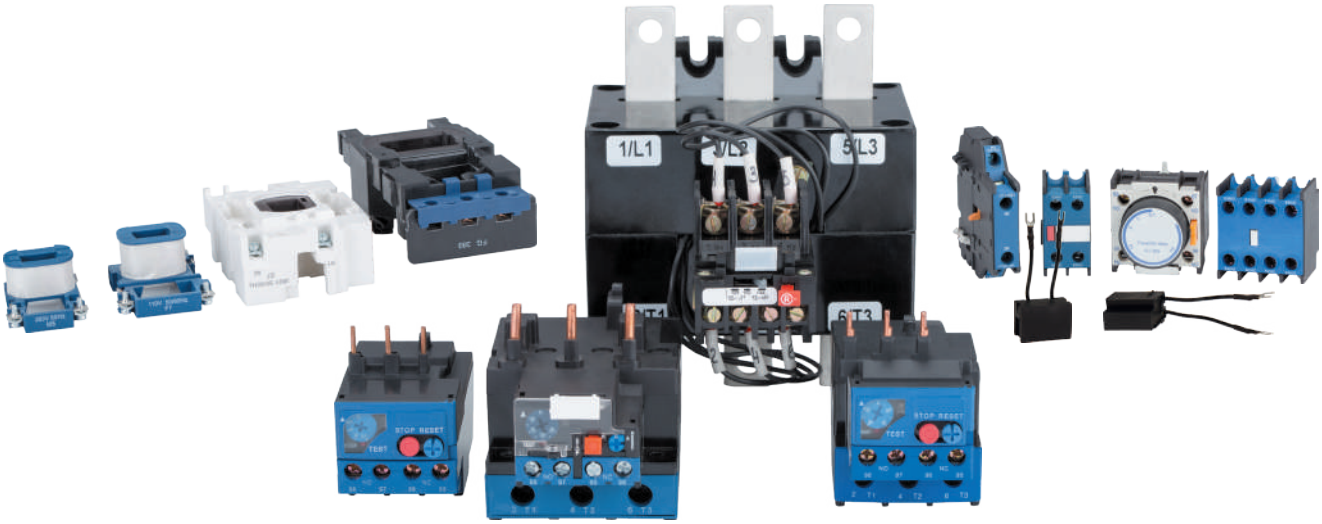

Benefits

- Implementation of any technical solutions
  - the range of accessories and thermal relays of the RTL series is fully adapted for both the lines of contactors and starters of the PML and PM12 series;
  - a wide range of modern thermal relays for currents up to 500 A;
  - a wide range of control coils, V: 24 to 660 (AC); 24 to 220 (DC).
- Convenience in work
  - possibility to manually stop the motor with the STOP button;
  - selection of the return mode of the RTL relay to work. Automatic (self-return), manual return is carried out by the RESET button;
  - possibility to install thermal relays, both on DIN-rail and on the mounting panel.

Design features

- Presence of temperature compensator.
- Built-in 1 "p" and 1 "з" contacts.
- Choice of return to work: manual or self-return.

Thermal relays of RTL series can be mounted either directly to the contactor, or separately using the KRL Terminal strip (screws or DIN-rail).

- The STOP and RESET control buttons are located on the front panel of the RTL relay.

- Possibility to regulate the current setting.

Thermal overload relays of RTL series

Designation structure

Thermal overload relay RTL-$X_1X_2X_3$-X_4-X_5A-(X_6A)-UHL4-KEAZ

Thermal overload relay	- Product group
RTL	- Series
X_1	- Rated relay current: 1 - up to 25 A, 2 - up to 100 A (up to 80 A for I1), 3 - up to 250 A, 4 - up to 510 A
X_2	- Current setting range (conditionally)
X_3	- D - version of the relay with reduced overall dimensions (for rated current of 36 A)
X_4	- Relay return method: 1 - manual, 2 - manual and self-return
X_5	- Rated current, A:
X_6	- Current setting range of the relay, A
UHL4	- Type of a climatic category in accordance with GOST 15150
KEAZ	- Trademark

Example of recording the designation of a relay at a rated current of 100 A with a current setting range of 48-65 A, with self-return, for installation directly on the PML contactor when ordering and in the documentation of another product: Thermal overload relay RTL-2059-2-100A-(48-65A)-UHL4-KEAZ

Designation structure

Terminal strip KRL-X_1X_2-UHL4-KEAZ

Terminal strip	- Product group
KRL	- Letter designation
X_1X_2	- Rated current and relay type: 1 - 25A RTL-1000; 2D - 36A RTL-2000D; 2 - 100A RTL-2000
UHL4	- Type of climatic category and placement category according to GOST 15150
KEAZ	- Trademark

Example of recording the designation of a relay at rated current up to 100 A with a current setting range of 48-65 A, with self-return, for individual installation with a KRL-2 Terminal strip:
Thermal overload relay RTL-2059-2-100A-(48-65A)-UHL4-KEAZ; Terminal strip KRL-2-UHL4-KEAZ.

Technical characteristics of the relay series RTL

Parameter name	Parameter designation															
																
Series	RTL-1001	RTL-1002	RTL-1003	RTL-1004	RTL-1005	RTL-1006	RTL-1006D	RTL-1007	RTL-1008	RTL-1010	RTL-1012	RTL-1014	RTL-1016	RTL-1021	RTL-1022	RTL-1023
Rated current, A	25															
Current setting range, A																
of the relay	0.1-0.16	0.16-0.25	0.25-0.4	0.4-0.63	0.63-1	1-1.6	1.25-2	1.6-2.5	2.5-4	4-6	5.5-8	7-10	9-13	12-18	17-25	23-32
relay version 1	0.1-0.17	0.16-0.26	0.25-0.4	0.38-0.65	0.61-1	0.95-1.6	-	1.5-2.6	2.4-4	3.8-6	5.5-8	7-10	9.5-14	13-19	18-25	-
Designation of the range of the current setting	001	002	003	004	005	006	006Д	007	008	010	012	014	016	021	022	023
Relay return method:																
of the relay	Manual and self return															
relay version 1	Manual						-	Manual								-
Power consumption by one pole of the relay, W, max	2,5												3,0			
Motor power, kW																
220 V	-	-	-	-	-	-	0.37	0.37	0.75	1.1	1.8	2.2	3.0	4.0	5.5	7.5
380 V	-	-	-	-	-	0.37	0.75	0.75	1.5	2.2	3.0	4.0	5.5	7.5	11	15
660 V	-	-	-	0.37	0.75	1.1	1.5	1.5	3.0	4.0	5.5	7.5	10	15	18.5	22
Rated cross-section of connecting wires, mm^2																
Cu	1.0											1.5	1.5	2.5	4.0	6.0
Al	2.5													4.0	6.0	10.0
Overall dimensions (HxWxD), mm																
of the relay	66x45x94															
relay version 1	56x44x90						-	56x44x90								-
Weight, max kg																
of the relay	0,175															
relay version 1	0,125						-	0,125								-

Parameter name	Parameter designation													
			 											
Series	RTL-2053Д	RTL-2055Д	RTL-2053	RTL-2055	RTL-2057	RTL-2059	RTL-2061	RTL-2063	RTL-2064	RTL-3125	RTL-3170	RTL-3270	RTL-4410	RTL-4510
Rated current, A	36		100 (80)*							250			500	
Current setting range, A														
of the relay	25-32	28-36	23-32	30-40	37-50	48-65	55-70	63-80	80-95	-	-	-	-	-
relay version 1	-	-	23-32	30-41	38-52	47-64	54-74	63-86	-	74-125	102-170	165-270	250-410	310-510
Designation of the range of the current setting	053D	055D	053	055	057	059	061	063	064	125	170	270	410	510
Relay return method:														
of the relay	Manual and self-return									-	-	-	-	-
relay version 1	-	-	Manual						-	Manual				
Power consumption by one pole of the relay, W, max	2,5	3,5				4,5		6,0		2,5				
Motor power, kW														
220 V	7,5	10	7,5	10	11	15	18,5	22	30	30	45	65	110	140
380 V	15	18,5	15	18,5	22	25	30	37	59	59	80	110	185	257
660 V	22	30	22	30	37	45	55	7,6	110	110	140	200	335	445
Rated cross-section of connecting wires, mm^2														
Cu	6.0	10.0	6.0	10.0	10.0	16.0	25.0	25.0	35.0	50.0	70.0	120	240	2x150
Al	10.0	16.0	10.0	16.0	16.0	25.0	25.0	35.0	50.0	70.0	120	-	-	-
Overall dimensions (HxWxD), mm														
of the relay	78x55x94		83x72x117							-	-	-	-	-
relay version 1	-	-	75x64x116							160x129x176			182x171x210	194x171x210
Weight, max kg														
of the relay	0,25		0,50							-				
relay version 1	-	-	0,36						-	2,1			3,4	3,8

** - for overload relay Version 1*

Item numbers

	Name	Rated current, A	Setpoint range, A	Motor power (AC-3) at 380 V 50 Hz, kW			Relay return method	Item number
				220	380	660		
	RTL-1001-2-25A-(0,1-0,16A)-UHL4	25	0.1-0.16	-	-	-	manual and self return	110735
	RTL-1002-2-25A-(0,16-0,25A)-UHL4		0.16-0.25	-	-	-		110736
	RTL-1003-2-25A-(0,25-0,4A)-UHL4		0.25-0.4	-	-	-		110737
	RTL-1004-2-25A-(0,4-0,63A)-UHL4		0.4-0.63	-	-	0.37		110738
	RTL-1005-2-25A-(0,63-1A)-UHL4		0.63-1.0	-	-	0.75		110739
	RTL-1006-2-25A-(1-1,6A)-UHL4		1-1.6	-	0.37	0.75		110740
	RTL-1006Д-2-25A-(1,25-2A)-UHL4		1.25-2	0.37	0.75	1.5		110741
	RTL-1007-2-25A-(1,6-2,5A)-UHL4		1.6-2.5	0.37	0.75	2.2		110742
	RTL-1008-2-25A-(2,5-4A)-UHL4		2.5-4.0	0.75	1.5	3.0		110743
	RTL-1010-2-25A-(4-6A)-UHL4		4.0-6.0	1.1	2.2	4.0		110744
	RTL-1012-2-25A-(5,5-8A)-UHL4		5.5-8.0	1.8	3.0	5.5		110745
	RTL-1014-2-25A-(7-10A)-UHL4		7.0-10	2.2	4.0	7.5		110746
	RTL-1016-2-25A-(9-13A)-UHL4		9.0-13	3.0	5.5	10		110747
	RTL-1021-2-25A-(12-18A)-UHL4		12.0-18	4.0	7.5	15		110748
	RTL-1022-2-25A-(17-25A)-UHL4		17-25	5.5	11	18.5		110749
	RTL-1023-2-25A-(23-32A)-UHL4		23-32	7.5	15	22		110750
	RTL-2053Д-2-36A-(25-32A)-UHL4	36	25-32	7.5	15	22		110752
	RTL-2055Д-2-36A-(28-36A)-UHL4		28-36	10	18.5	30		110754
	RTL-2053-2-100A-(23-32A)-UHL4	100	23-32	7.5	15	22		110751
	RTL-2055-2-100A-(30-40A)-UHL4		30-40	10	18.5	30		110753
	RTL-2057-2-100A-(37-50A)-UHL4		37-50	11	22	37		110755
	RTL-2059-2-100A-(48-65A)-UHL4		48-65	15	25	45		110756
	RTL-2061-2-100A-(55-70A)-UHL4		55-70	18.5	30	55		110757
	RTL-2063-2-100A-(63-80A)-UHL4		63-80	22	37	7.6		110758
	RTL-2064-2-100A-(80-93A)-UHL4		80-95	30	59	110		110759
Relay version 1								
	RTL-1001M-1-25A-(0,1-0,17A)-I1-UHL4	25	0.1-0.17	-	-	-	manual	231007
	RTL-1002M-1-25A-(0,16-0,26A)-I1-UHL4		0.16-0.26	-	-	-		231008
	RTL-1003M-1-25A-(0,24-0,4A)-I1-UHL4		0.25-0.4	-	-	-		231009
	RTL-1004M-1-25A-(0,38-0,65A)-I1-UHL4		0.38-0.65	-	-	0.37		231010
	RTL-1005M-1-25A-(0,61-1A)-I1-UHL4		0.61-1.0	-	-	0.75		231011
	RTL-1006M-1-25A-(0,95-1,6A)-I1-UHL4		0.95-1.6	-	0.37	0.75		231012
	RTL-1007M-1-25A-(1,5-2,6A)-I1-UHL4		1.5-2.6	0.37	0.75	2.2		231013
	RTL-1008M-1-25A-(2,4-4A)-I1-UHL4		2.4-4.0	0.75	1.5	3.0		231014
	RTL-1010M-1-25A-(3,8-6A)-I1-UHL4		3.8-6.0	1.1	2.2	4.0		231015
	RTL-1012M-1-25A-(5,5-8A)-I1-UHL4		5.5-8.0	1.8	3.0	5.5		231016
	RTL-1014M-1-25A-(7-10A)-I1-UHL4		7.0-10	2.2	4.0	7.5		231017
	RTL-1016M-1-25A-(9,5-14A)-I1-UHL4		9.5-14	3.0	5.5	10		231018
	RTL-1021M-1-25A-(13-19A)-I1-UHL4		13-19	4.0	7.5	15		231019
	RTL-1022M-1-25A-(18-25A)-I1-UHL4		18-25	5.5	11	18.5		231020
	RTL-2053M-1-80A-(23-32A)-I1-UHL4	80	23-32	7.5	15	22		231021
	RTL-2055M-1-80A-(30-41A)-I1-UHL4		30-41	10	18.5	30		231022
	RTL-2057M-1-80A-(38-52A)-I1-UHL4		38-52	11	22	37		231023
	RTL-2059M-1-80A-(47-64A)-I1-UHL4		47-64	15	25	45		231024
	RTL-2061M-1-80A-(54-74A)-I1-UHL4		54-74	18.5	30	55		231025
	RTL-2063M-1-80A-(63-86A)-I1-UHL4		63-86	22	37	7.6		231026
	RTL-3125-1-250A-(74-125A)-UHL4	250	74-125	30	59	110		227117
	RTL-3170-1-250A-(102-170A)-UHL4		102-170	45	80	140		227118
	RTL-3270-1-250A-(165-270A)-UHL4		165-270	65	110	200		227119
	RTL-4410-1-500A-(250-410A)-UHL4	500	250-410	110	185	335		227120
	RTL-4510-1-500A-(310-510A)-UHL4		310-510	140	257	445		227121

Item numbers KRL

	Name	For thermal overload relays	Item number
	Terminal strip KRL-1-UHL4	RTL-1000	110534
	Terminal strip KRL-2D-UHL4	RTL-2000Д	110536
	Terminal strip KRL-2-UHL4	RTL-2000	110535

Note: not suitable for overload relays Version 1.

Overall and installation dimensions of the relay series RTL

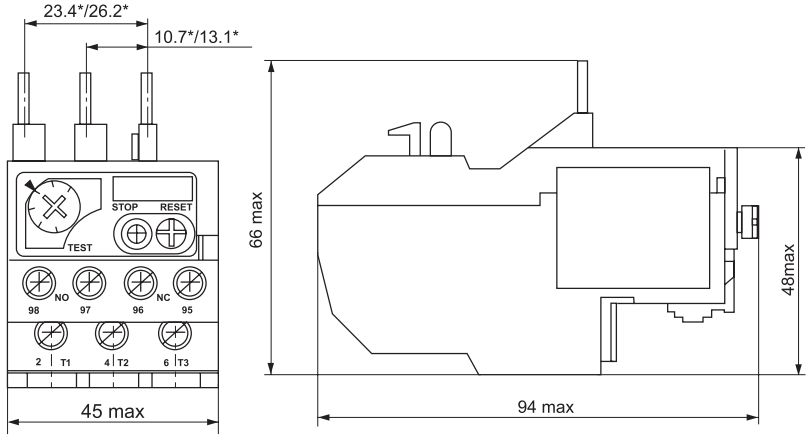

Relay RTL-1000 for connection to the contactor

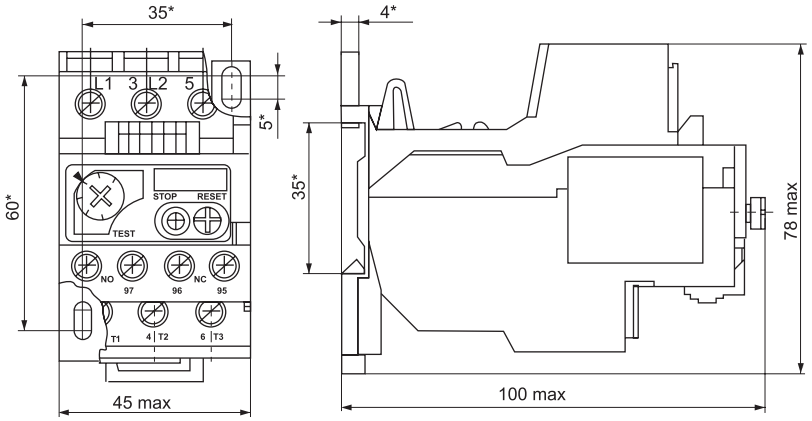

Relay RTL-1000
for individual installation with the Terminal strip KRL-1

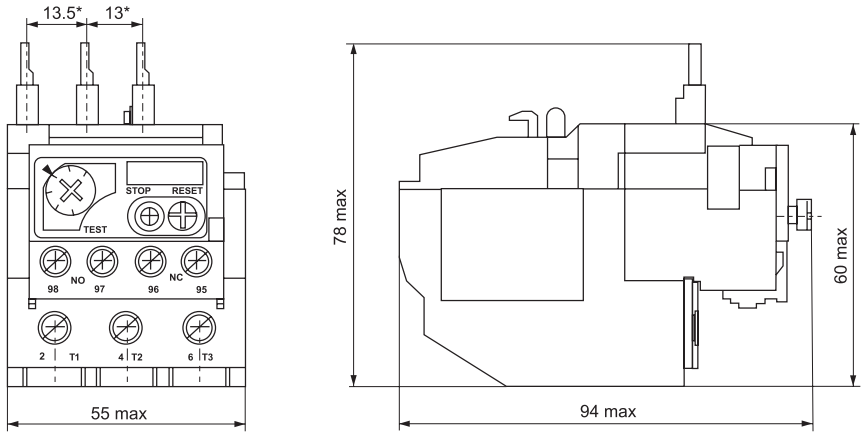

Relay RTL-2000D
for connection to the contactor

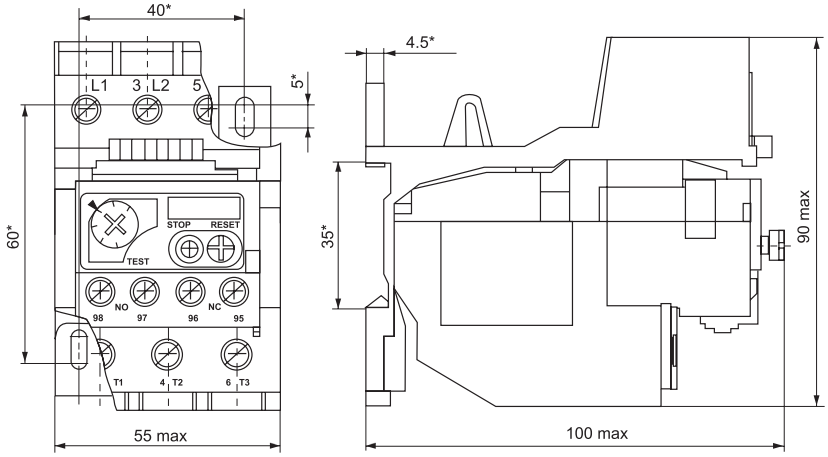

Relay RTL-2000D
for individual installation with the Terminal strip KRL-2D

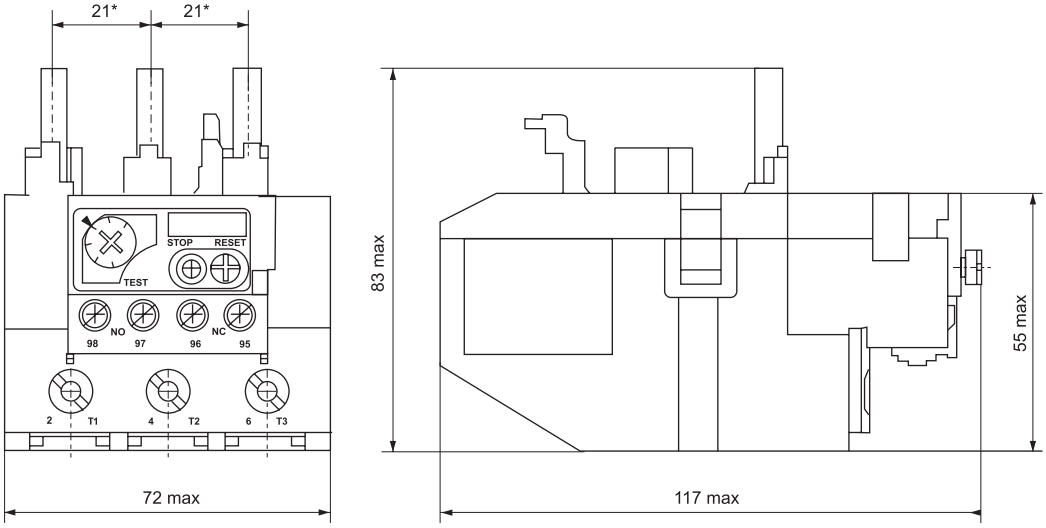

Relay RTL-2000 for connection to the contactor

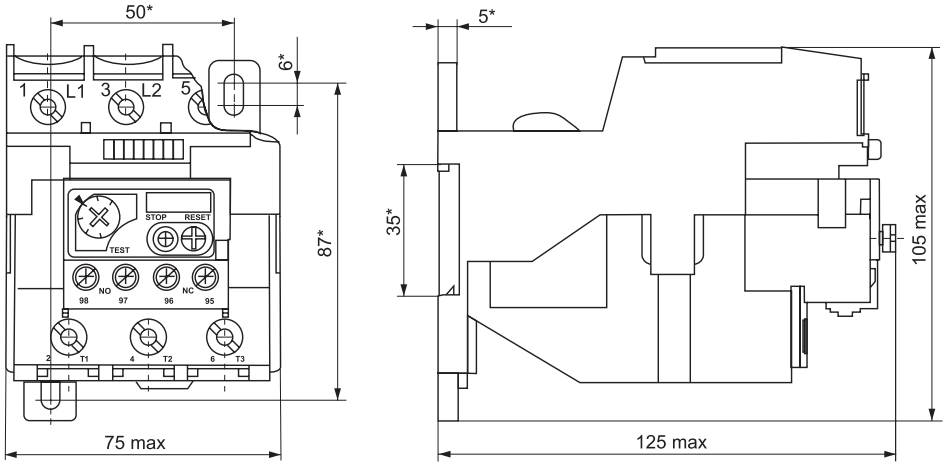

Relay RTL-2000 for individual installation with the Terminal strip KRL-2

Version 1

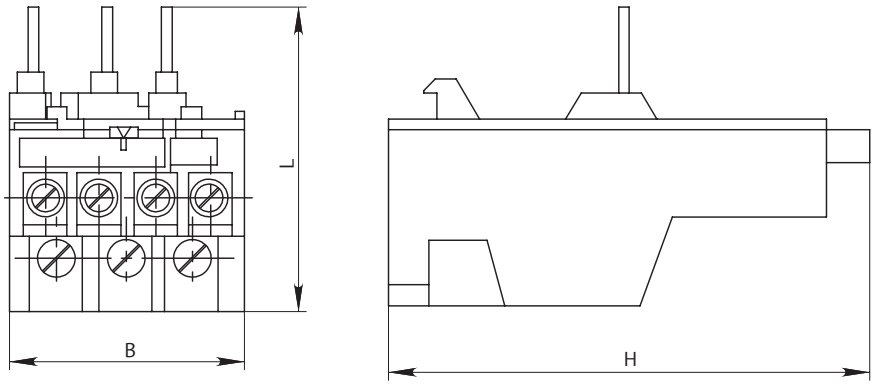

Relay RTL-1000, RTL-2000 for connection to the contactor

Relay Type Designation	Rated current, A	A	A1	B	H	L	Picture	Weight, max kg	Screw for fastening
RTL-1000	25	-	-	44±0,5	90±0,5	56±1	B.8	0,125	M4- 2 pcs.
RTL-2000	80	-	-	63,5±0,5	116±0,5	73±0,5	B.8	0,36	

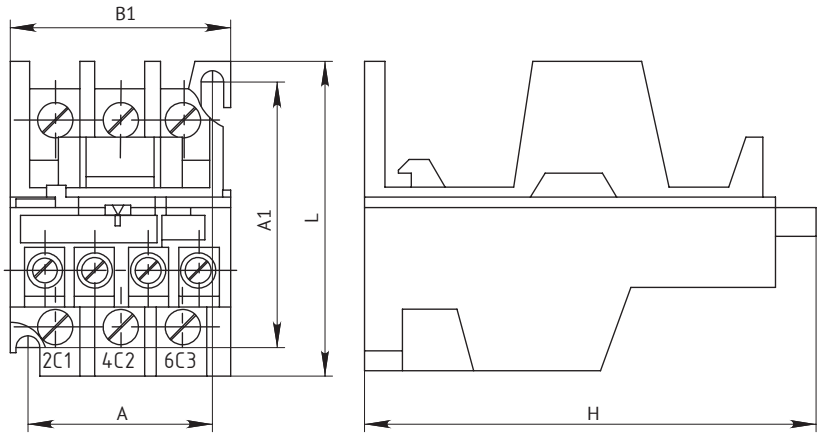

Relay type RTL-1000, RTL-2000 for individual installation with the Terminal strip KRL-1, KRL-2

Relay Type Designation	Rated current, A	A	A1	B1	H	L	Picture	Weight, max kg	Screw for fastening
RTL-1000	25	35±0,5	50±0,5	44±0,5	90±0,5	61±1	B.7	0,16	M4 - 2 pcs.
RTL-2000	80	50±0,5	50±0,5	75±0,5	116±0,5	76,3±0,5	B.7	0,505	

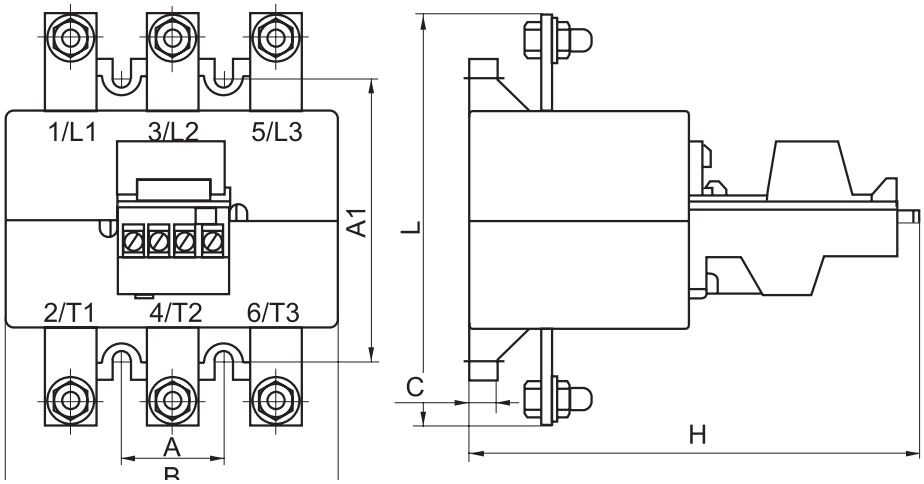

Relay RTL-3000, RTL-4000 for individual installation

Relay Type Designation	Rated current, A	A	A1	B	H	L	C	Weight, max kg	Screw for relay fastening
RTL-3000	250	40±0,3	110±0,5	129±1	176±1	160±1	11±0,3	2,1	M6 - 4 pcs.
RTL-4410	500	49±0,3	130±0,5	171±1	210±1	182±1	12±0,3	3,4	
RTL-4510						194±1		3,8	

Wiring diagram of the relay in the load circuit

Wiring diagram of the relay in the three-phase load circuit

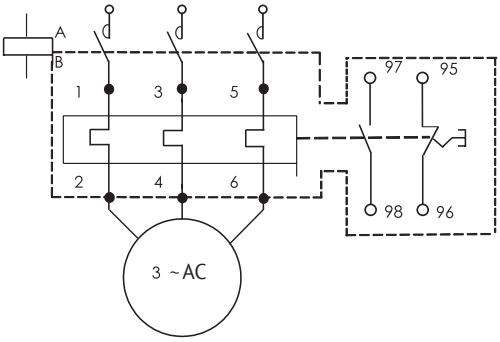

Scheme of connecting the to the two-phase circuit and the DC circuit

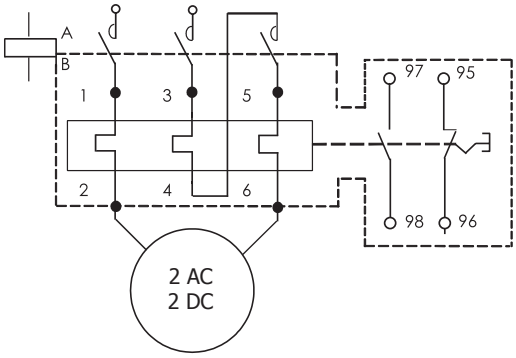

Electrical schematic diagram

Relay Version 1 (with manual return)

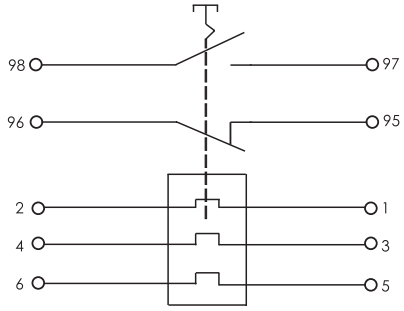

Relay Version 2 (with manual and self-return)

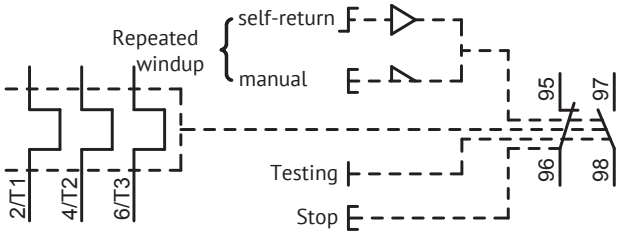

Time-current relay characteristics

Relay RTL-1000, RTL-2000, RTL-2000D

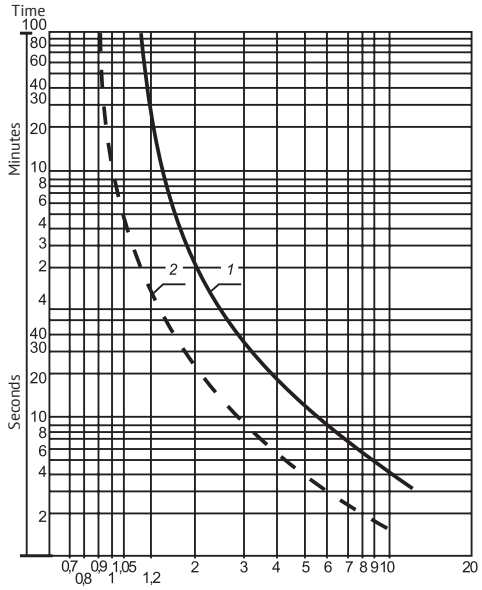

The current ratio in the circuit in relation to the current setting:
1 - when working with a cold state;
2 - when working with a hot state;

Relay RTL-3000, RTL-4000

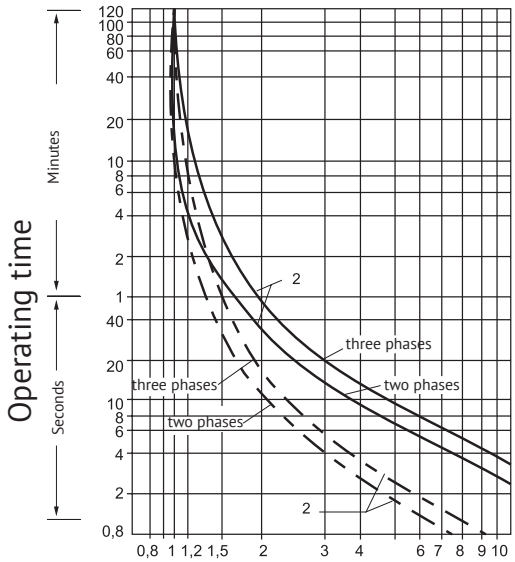

The current ratio in the circuit in relation to the current setting:
1 - during the three-phase operation;
2 - during the two-phase operation;

Overall, installation and mounting dimensions of Terminal strips

Terminal strip of KRL-1 type

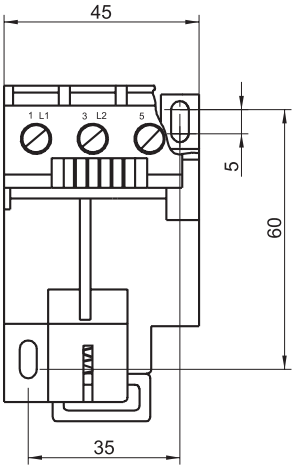

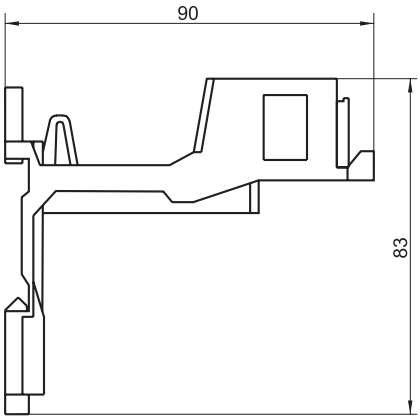

Terminal strip of KRL-2D type

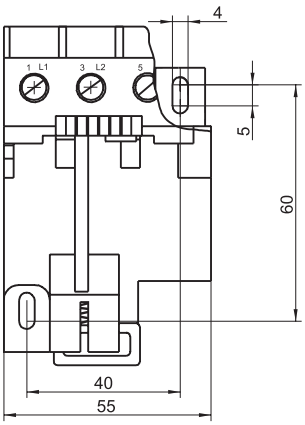

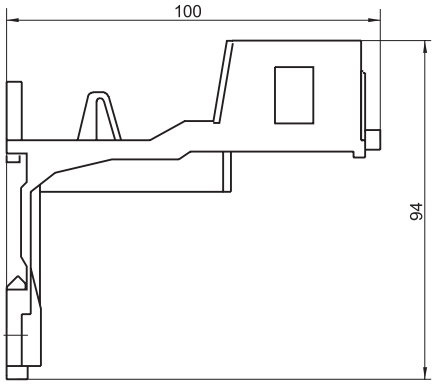

Terminal strip of KRL-2 type

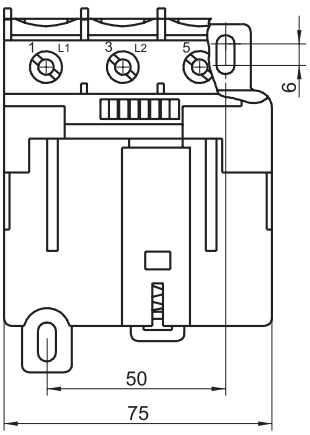

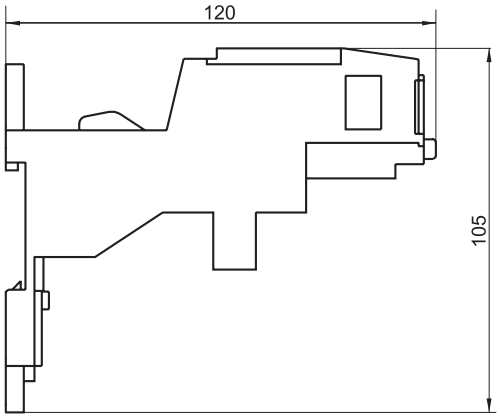

Accessories for PML and PM12

Designation structure

Overvoltage protection RC OPN 1X_1X_2-UHL4-KEAZ

Excess-voltage suppressor	- Product group
RC OPN	- Series
1	- Version by the hardware components: resistive-capacitive (R-C)
X_1	- Version with contactor for currents: 1 - (10-32)A; 2 - (40-100)A
X_2	- Version of the rated voltage and the current of the control circuit: 1 - (24-48) B AC/DC 2 - (100-250) B AC/DC 3 - (380-400) B AC/DC 4 - (200-250) B AC/DC 5 - (100-127) B AC/DC
UHL4	- Climatic category and placement category according to GOST 15150
KEAZ	- Trademark

Contact adapter PKL or PKB-X_1X_2-UHL4-KEAZ

Contact adapter	- Product group
PKL or PKB	- Series
X_1	- Number of closing "з" contacts
X_2	- Number of opening "p" contacts
UHL4	- Type of a climatic category in accordance with GOST 15150
KEAZ	- Trademark

Example of the recording of the designation of the adapter of the contact series PKL with two "" closing and two "p" opening contacts: Contact adapter PKL-22-UHL4-KEAZ

Time delay adapter PVL-X_1X_2-UHL4-KEAZ

Time delay attachment	- Product group
PVL	- Series
X_1	- Time delay at switching on - 1 - Time delay at switching off - 2
X_2	- Digit indicating the time delay range: 1 - (0.1-3 s); 2 - (10-180 s); 3 - (0.1-30 s)
UHL4	- Type of a climatic category in accordance with GOST 15150
KEAZ	- Trademark

Example of the recording of the designation of the adapter with a time delay at switching on, with a range of time from 0.1 to 30 s: Time delay adapter PVL-13-UHL4-KEAZ

Specifications

Parameter name	Parameter designation					
						
OPN type	RC OPN-111	RC OPN-112	RC OPN-113	RC OPN-123	RC OPN-124	RC OPN-125
Coil voltage (US), V	24-48	100-250	380-400	380-400	200-250	100-127
Rated current of the contactor, A	10, 16, 25, 32			40, 63, 80, 100		
Type of current control circuit	AC/DC					

Note.
The limiters are installed on contactors with degree of protection IP00, IP20.

Parameter name	Parameter designation														
															
Series	PKL-02	PKL-20	PKL-11	PKL-22	PKL-04	PKL-40	PKL-13	PKL-31	PKV-11	PVL-11	PVL-12	PVL-13	PVL-21	PVL-22	PVL-23
Name	Contact adapters									Time delay adapters					
Number of contacts															
closing	0	2	1	2	0	4	1	3	1	1					
opening	2	0	1	2	4	0	3	1	1	1					
Time delay															
Range, s	-									0,1-3	10-180	0,1-30	0,1-3	10-180	0,1-30
Switching type	-									At switching on			At switching off		
Mechanical wear resistance, million cycles	16									5					
Switching wear resistance, million cycles	1,5														
Operating mode	Intermittent-continuous, continuous, intermittent														
Dimensions															
Overall (HxWxD), mm	48x23x38			48x44x38					70x12x72	50x44x59					
Applicability with contactors for currents	from 10 A to 800 A								to 100 A*	from 10 A to 800 A					
Weight, max kg	0,03			0,06					0,06	0,08					

* For contactors for currents of 80 and 100 A, the installation of the PKB-11 adapter is provided with an adapter.

Item numbers for PML and PM12

Name	Item number
Overvoltage protection RC OPN-111-UHL4	253247
Overvoltage protection RC OPN-112-UHL4	253249
Overvoltage protection RC OPN-113-UHL4	253250
Overvoltage protection RC OPN-123-UHL4	253251
Overvoltage protection RC OPN-124-UHL4	253252
Overvoltage protection RC OPN-125-UHL4	253248
Set of mechanical interlocks PML-(10-32A)-UHL4	110660
Set of mechanical interlocks PML-(40-63A)-UHL4	110661
Set of mechanical interlocks PML-(80-100A)-UHL4	110662
Time delay adapter PVL-11-UHL4	110663
Time delay adapter PVL-12-UHL4	110664
Time delay adapter PVL-13-UHL4	110665
Time delay adapter PVL-21-UHL4	110666
Time delay adapter PVL-22-UHL4	110667
Time delay adapter PVL-23-UHL4	110668
Contact adapter PKB-11-UHL4	110669
Contact adapter PKL-02-UHL4	110670
Contact adapter PKL-04-UHL4	110671
Contact adapter PKL-11-UHL4	110672
Contact adapter PKL-13-UHL4	110673
Contact adapter PKL-20-UHL4	110674
Contact adapter PKL-22-UHL4	110676
Contact adapter PKL-31-UHL4	110677
Contact adapter PKL-40-UHL4	110678
Coil PML-1-(10-16A)-110AC-UHL4-I1	229791
Coil PML-1-(10-16A)-220AC-UHL4-I1	229792
Coil PML-1-(10-16A)-24AC-UHL4-I1	229793
Coil PML-1-(10-16A)-36AC-UHL4-I1	229794
Coil PML-1-(10-16A)-380AC-UHL4-I1	229795
Coil PML-1-(10-16A)-42AC-UHL4-I1	229796
Coil PML-1-110AC-UHL4	110493
Coil PML-1-220/230AC-UHL4	110495
Coil PML-1-24AC-UHL4	110497
Coil PML-1-36AC-UHL4	110498
Coil PML-1-48AC-UHL4	110504
Coil PML-1-380AC-UHL4	110499
Coil PML-2,3D-(25-40A)-110AC-UHL4-I1	229797
Coil PML-2,3D-(25-40A)-220AC-UHL4-I1	229798
Coil PML-2,3D-(25-40A)-24AC-UHL4-I1	229799
Coil PML-2,3D-(25-40A)-36AC-UHL4-I1	229800
Coil PML-2,3D-(25-40A)-380AC-UHL4-I1	229801
Coil PML-2,3D-(25-40A)-42AC-UHL4-I1	229802
Coil PML-2-110AC-UHL4	110506
Coil PML-2-220/230AC-UHL4	110508
Coil PML-2-24AC-UHL4	110510
Coil PML-2-36AC-UHL4	110511
Coil PML-2-380AC-UHL4	110512
Coil PML-2-42AC-UHL4	110515
Coil PML-3,4,5D-(40-100A)-110AC-UHL4-I1	229803
Coil PML-3,4,5D-(40-100A)-220AC-UHL4-I1	229804
Coil PML-3,4,5D-(40-100A)-24AC-UHL4-I1	229805
Coil PML-3,4,5D-(40-100A)-36AC-UHL4-I1	229806
Coil PML-3,4,5D-(40-100A)-380AC-UHL4-I1	229807
Coil PML-3,4,5D-(40-100A)-42AC-UHL4-I1	229808
Coil PML-3/4/5D-110AC-UHL4	110520
Coil PML-3/4/5D-220/230AC-UHL4	110523
Coil PML-3/4/5D-24AC-UHL4	110525
Coil PML-3/4/5D-36AC-UHL4	110526

** Not all possible versions are presented in the table, you can find a more complete list on our website or by calling us.*

Name	Item number
Coil PML-3/4/5D-380AC-UHL4	110527
Coil PML-3/4/5D-42AC-UHL4	110530
Coil PML-5-110AC-UHL4	238398
Coil PML-5-220AC-UHL4	112910
Coil PML-5-380AC-UHL4	112911
Coil PML-6-220AC-UHL4	112897
Coil PML-6-380AC-UHL4	112898
Coil PML-7-220AC-UHL4	112899
Coil PML-7-380AC-UHL4	112900
Coil PML-8-220AC-UHL4	112901
Coil PML-8-380AC-UHL4	112902

Overall and installation dimensions of the PKL, PVL and PKB adapters

Contact adapters PKL-02, PKL-20, PKL-11

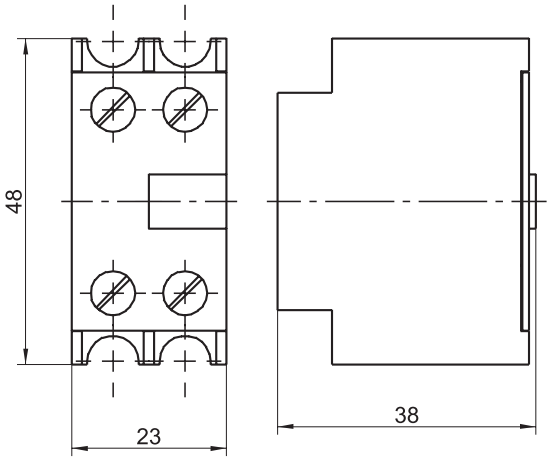

Adapter weight, max, kg - 0,03

Contact adapters PKL-22, PKL-04, PKL-40, PKL-13, PKL-31

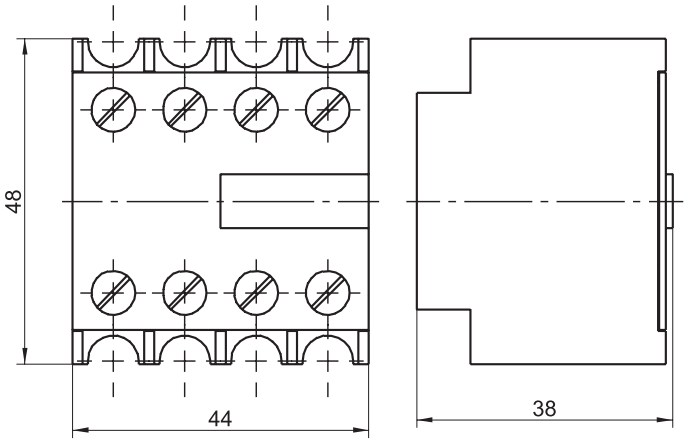

Adapter weight, max, kg - 0,06

Contact adapters PKB - 11

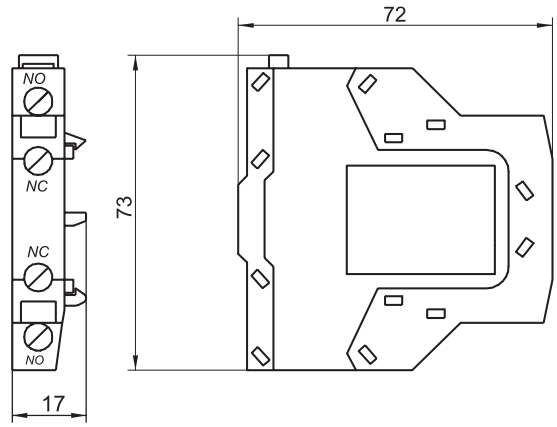

Adapter weight, max, kg - 0,06

Time delay adapters PVL

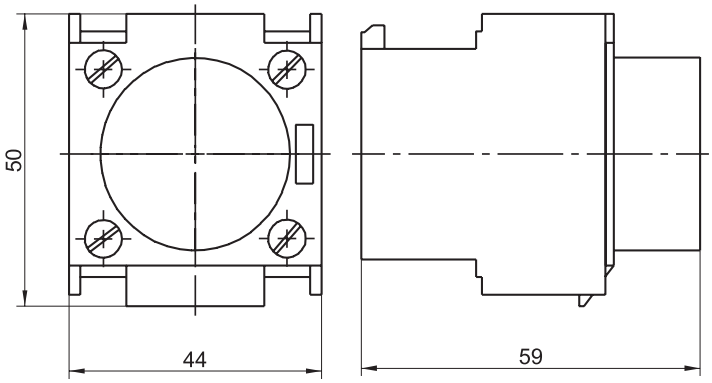

Electrical circuit diagrams of PKL, PKB adapters

PKL-04

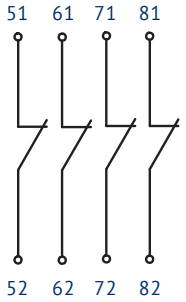

PKL-40

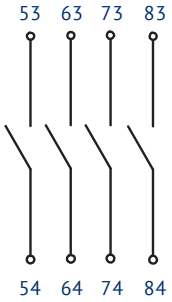

PKL-02

PKL-20

PKL-31

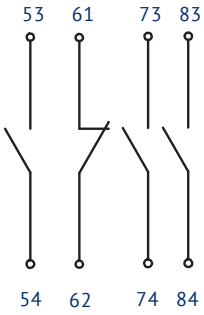

PKL-13

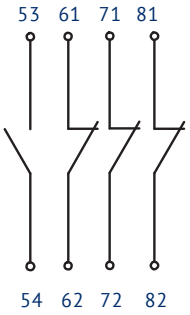

PKL-11

PKB-11

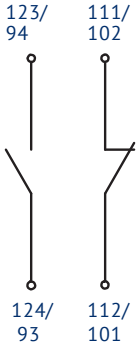

PKL-22

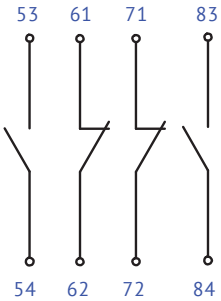

Electrical circuit diagrams of PVL adapters

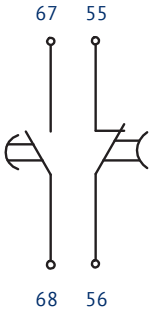

Time delayed at closure

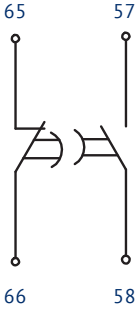

Time delayed at opening