OPTIMA

KEAZ

Electrical products catalog

2024

Combining experience and modern technologies to create electrical solutions

Energy of unity

Get involved in evolution

KEAZ is an expert in the development and production of electrical equipment and process control system components with over 78 years of experience.

KEAZ mission and values
We discover the world of energy through cognition, creating reliable and effective solutions for human use. Bringing together experts in pursuit of growth, awareness and positive change, we know that working together with people of a similar mindset is required to achieve the greatest possible results. And only this path will lead to the sustainable development. We unite just such people and companies.

КЭАЗ

time-tested, reliable solutions
for up to 2000 A

OPTIMA
KEAZ

state-of-the-art equipment for up to 6300 A,
which, according to its characteristics, is
capable of replacing imported counterparts

Contents

4 **OptiDin**

Din-rail devices

6 Miniature circuit breakers
26 Modular load breakers
30 Residual current devices
48 Surge protection devices
59 Modular contactors
70 Modular command and signaling devices

79 **OptiRel**

Relay protection and automation devices

81 OptiRel G Interposing relays and accessories
115 OptiRel D Control and protection relays

129 **OptiPower**

Power supply units

138 **OptiMat**

Power circuit breakers

142 OptiMat E Molded case circuit breakers 16 to 250 A
155 OptiMat D Molded case circuit breakers 40 to 1600 A
200 OptiMat A Air circuit breakers 630 to 6300 A

253 **OptiBlock, OptiVert, OptiSwitch, OptiFuse**

Switch-disconnectors, load break switches, switches and fuses

255 OptiBlock Fuse-switch-disconnectors from 160 to 630 A
263 OptiVert Strip-type fuse-switch-disconnectors from 160 to 630 A
271 OptiSwitch DI Switch-disconnectors from 16 to 125 A
279 OptiSwitch DI Load break switches and changeover switches from 25 to 3150 A
291 OptiSwitch 4G Cam switches from 10 to 100 A
325 OptiFuse NH Knife-type fuses from 6 to 630 A
331 OptiFuse FR Fast responce fuses from 40 to 4000 A

345 OptiStart

Start-control devices

347 OptiStart MP Motor protection circuit breakers up to 100 A
364 OptiStart K Electromagnetic contactors up to 1600 A
461 OptiStart TF Overload relays up to 420 A
473 OptiStart E LC1E Electromagnetic contactors up to 630 A
485 OptiStart E LRE Thermal relays up to 93 A

491 OptiSave

Automatic transfer switch units

495 OptiSave L Automatic transfer switch unit of simplified functional characteristics
501 OptiSave H Automatic transfer switch unit of extended functional characteristics

518 Circuit breaker protection selectivity

OptiDin
Din-rail devices

Miniature circuit breakers	6
Modular load breakers	26
Residual current devices	30
Surge protection devices	48
Modular contactors	59
Modular command and signaling devices	70

OptiDin series of din-rail devices are used for power protection and distribution systems in all main industries. Proposed devices may have approvals of the Russian Shipping Register (RSR), Russian Marine and River Shipping Register (RMRS), as well as the nuclear power plant licensing.

Miniature circuit breakers

OptiDin BM63 7

In (A):
1 to 63
I (set.): B; C; D;
Z (4In); L (8In);
K (12In)
Icn, Icu (kA):
4,5; 6; 10; 15;
20; 25

OptiDin BM63 DC 16

In (A):
1 to 50
I (set.): B; C;
Z; L; K
Icn, Icu (kA): 6
Normal and
reverse polarity

OptiDin BM125 20

In (A):
80 to 125
I (set.): C; D
Icu (kA): 15; 20

Load breakers

OptiDin BM63P, BM63PL 26

In (A):
20 to 125
Ue (B):
AC — 230; 400;
230/400
General wear
resistance: to
14,000

Residual current devices

OptiDin DM63 32

In (A):
25 to 100
Icn (kA): 4,5; 6
Type: A; AC
Residual current
IΔn (mA): 10; 30;
100; 300
Type:
electromechanical

OptiDin D63 40

In (A):
6 to 40
Icn (kA): 4,5; 6
Type: A; AC
I (set.): C
Residual current
IΔn (mA): 10; 30;
100; 300

OptiDin VD63 46

In (A):
6 to 63
Icn (kA): 6; 10
Type: A
I (set.): B; C; D
Residual current
IΔn (mA): 10; 30;
100; 300

Accessories

Module of free and signal contacts 23
Free contact module 23
Shunt trip 24
Undervoltage and overvoltage release 24
OptiDin socket PA10/16 25
Handle locking device 25

SPD

OptiDin OM 48

Protection types:
I; II; III
Imp. current Iimp
(10/350) (кА),
7 to 100
Max. discharge
current Imax
(8/20) (kA),
7 to 80

Modular contactors

OptiDin MK-100 59

In (A):
20 to 100
Type and
voltage of
control coil (B):
24; 48; 110;
230 AC

Modular command and signaling devices

OptiDin SL63 70

Ue (B):
AC — from 24
to 230;
DC — from 24
to 48
Operating
temperature
range:
-60 to +40 °C

OptiDin FSL63 70

Ue (B):
AC — from 24
to 230
Operating
temperature
range:
-60 to +40 °C

OptiDin KM63 72

Ue (B):
AC — 230
Operating
temperature
range:
-60 to +40 °C

OptiDin ZM63 74

Ue (B):
AC — from 12
to 230
High sound
volume, dB:
80 – 95

OptiDin

↗ Miniature circuit breakers

Selection guide

Miniature circuit breakers								
Type		BM63 4,5кА	BM63		BM63-OT	BM63 DC		BM125
Appearance								
Standards		GOST IEC 60898-1	GOST IEC 60898-1	GOST P 50030.2	GOST IEC 60898-1	GOST IEC 60898-2	GOST P 50030.2	GOST IEC 60947-2
Number of poles		1P, 2P, 3P, 4P	1P, 1P+N, 2P, 3P, 3P+N, 4P		1P, 3P	1P, 2P, 3P, 4P		1P, 1P+N, 2P, 3P, 3P+N, 4P
Auxiliary devices for remote tripping and signaling		no	yes		yes	yes		yes
Electrical specifications								
Protective characteristic type		B, C	B, C, D	Z, L, K	D	B, C	Z, L, K	C, D
Rated current In, A		6–63	1–63		6–63	1–50	1–50	80, 100, 125
Rated operating voltage in 50 Hz AC circuit Ue, V	single-pole	230/400	230/400		230/400	-		230/400
	double-pole	230	230		230	-		230
	three-pole, four-pole	400	400		400	-		400
Rated operating voltage in DC circuit Ue, V	single-pole	-	-		-	220		-
	double-pole	-	110		-	440		-
	three-pole	-	-		-	660		-
	four-pole	-	-		-	880		-
Minimum operating voltage Ue, V (min.)		24	24		24	24		24
Rated impulse voltage Uimp, kV		4	4		4	4		4
Tripping current								
Rated short-circuit tripping capacity in 50 Hz AC circuits Icn, A		4500	6000, 10000, 15000, 20000, 25000		6000	-		15000*, 20000**
Rated short-circuit breaking capacity in DC circuits Icn, A		-	1500***		-	6000		-
Other specifications								
Fault trip indication		yes	yes		yes	yes		
IP rating		IP20	IP20		IP20	IP20		IP20
For more information, see page		12	14		18	19		21
Accessories		-	page 23–25					

* For parameter C at 125 A and D at 100 A
** For characteristic C at 80 and 100 A and D at 80 A
*** It is allowed to use double-pole AC circuit breakers in a DC circuit with voltage up to 110 V, while the rated maximum breaking capacity (Icn) shall be 1,500 A.

OptiDin BM63 Miniature circuit breakers

Miniature circuit breakers are designed to protect electrical installations from overcurrent and short circuits, as well as for infrequent manual circuit switching on/off.

KEAZ DC and AC miniature circuit breakers are devices for a wide range of applications: from use in solutions for construction, industrial facilities, construction of elite residential facilities, shopping centers and cottages to applications in power systems of nuclear power plants, thermal power plants, ships and submarines of the Ministry of Defense of the Russian Federation.

The wide range of accessories makes the use of KEAZ Miniature circuit breakers a convenient choice for any solution.

Designation

OptiDin BM63 - 1 N C 16 - 10 - DC - RP - UHL3 REG - RR

(1) (2) (3) (4) (5) (6) (7) (8) (9) (10) (11) (12)

1	Series	OptiDin					
2	Configuration	BM63					
3	Number of poles	1P	1P+N	2P	3P	3P+N	4P
4	Pole with no release device	N					
5	Protective characteristic designation	B	C	D	Z	L	K
6	Rated current value of thermal release, A	1, 2, 3, 4, 5, 6, 8, 10, 13, 16, 20, 25, 32, 40, 50, 63					
7	Tripping capacity value, kA	10, 15, 20, 25					
8	Designation of DC circuit breakers	DC					
9	Designation of reverse polarity for DC circuit breakers	RP					
10	Designation of climatic category and placement category as per GOST 15150	UHL3 (international TC3), OM4 (international UM4)					
11	Acceptance by the Sea and River Shipping Register	REG					
12	Design versions for deliveries to railway infrastructure facilities	RR					

OptiDin BM63 4,5 kA Miniature AC circuit breakers up to 63 A

OptiDin BM63 circuit breakers are designed to protect electrical circuits from overcurrent and short circuit currents, conduction of current in normal duty and operational on/off switching of these circuits.

The circuit breakers comply with the requirements of GOST IEC 60898-1 (domestic AC), TR TS 004/2011.

Series advantages

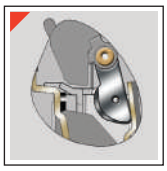

Silver-containing soldering on the fixed contact to increase wear resistance and reduce the contact resistance value.

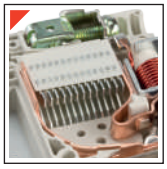

13 plates in the arc quenching chamber effectively quench arcs and ensure safe shutdown in emergencies.

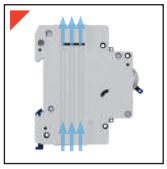

Better cooling due to shaped recesses on the housing.

The QR code helps obtain detailed information about the product, full specifications, and related documentation on the official website.

The barcode provides quick identification of the device for sales in retail trade networks, as well as on online trading platforms.

Special design of the lead terminals provides: the tightest and largest contact area to prevent heating and melting of conductors.

Items

OptiDin BM63 Circuit breaker (Icu = 4500 A)								
Number of poles	1		2		3		4	
Circuit diagrams			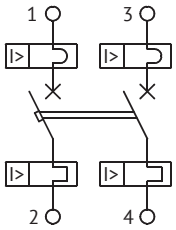		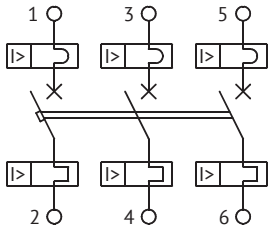		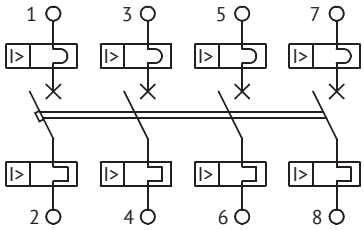	
Rated current In, A	Protective characteristic type		Protective characteristic type		Protective characteristic type		Protective characteristic type	
	C	B	C	B	C	B	C	B
6	326792	329499	326801	329508	326810	329517	326819	329526
10	326793	329500	326802	329509	326811	329518	326820	329527
16	326794	329501	326803	329510	326812	329519	326821	329528
20	326795	329502	326804	329511	326813	329520	326822	329529
25	326796	329503	326805	329512	326814	329521	326823	329530
32	326797	329504	326806	329513	326815	329522	326824	329531
40	326798	329505	326807	329514	326816	329523	326825	329532
50	326799	329506	326808	329515	326817	329524	326826	329533
63	326800	329507	326809	329516	326818	329525	326827	329534

Technical specification

Parameter		Value
Number of poles		1, 2, 3, 4
Overcurrent protection		all poles
Rated operating voltage in 50 Hz AC circuit, V	single-pole	230/400
	double-pole	230
	three-pole, four-pole	400
Minimum operating voltage, V		24
Rated operating current in AC circuit, A		6; 10; 16; 20; 25; 32; 40; 50; 63
Protective characteristic type		B, C
Rated ultimate short-circuit tripping capacity Icu, A		4500
General wear resistance of circuit breakers, cycles		10000
Switching wear resistance, cycles		5000
Protection class as per GOST 14254		IP20
Cross-section of wire connected to lead terminals, mm²		1÷25
Climatic category and placement category as per GOST 15150		UHL3 (international TC3)
Operation mode		continuous

Connection

Rated current In, A	Tightening torque, N/m	Without preparation of current conductor core, mm²			With preparation of current conductor core, mm²	
		Flexible copper (multicore)	Rigid copper (multicore and singlecore)	Aluminum (multicore and singlecore)	Flexible copper multicore	Flexible and rigid aluminum
6–63	2	1–10	1–16	1–10	25	16–25

OptiDin BM63 6 kA Miniature AC circuit breakers up to 63 A

OptiDin BM63 circuit breakers are designed to protect electrical circuits from overcurrent and short circuit currents, conduction of current in normal duty and operational on/off switching of these circuits.

The products comply with the requirements of GOST IEC 60898-1 (domestic AC) and GOST R 50030.2 (industrial purpose), TR TS 004/2011 and are manufactured as per TU 3421040057581092009.

Series advantages

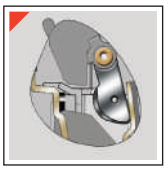

Silver-containing soldering on the moving and fixed contact to increase wear resistance and reduce the contact resistance value.

Accessories snap on to the left side of the circuit breaker, ensuring a fast, secure one-click highprecision connection.

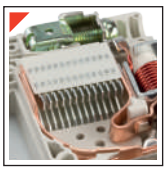

13 plates in the arc quenching chamber effectively quench arcs and ensure safe shutdown in emergencies.

The handle can be locked out to prevent unauthorized switching on/off.

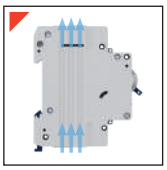

Better cooling due to shaped recesses on the housing.

Special design of the lead terminals provides: the tightest and largest contact area to prevent heating and melting of conductors.

The barcode provides quick identification of the device for sales in retail trade networks, as well as on online trading platforms.

The QR code helps obtain detailed information about the product, full specifications, and related documentation on the official website.

Items

OptiDin BM63 circuit breaker (Icu = 6000 A)																		
Number of poles	1						1+N						2					
Circuit diagrams	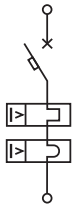						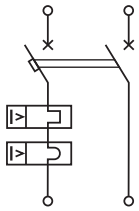						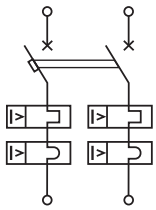					
Rated current In, A	Protective characteristic type						Protective characteristic type						Protective characteristic type					
	B	C	D	Z	L	K	B	C	D	Z	L	K	B	C	D	Z	L	K
1	257917	260504	260520	260568	260552	260536	260664	260680	260696	260744	260728	260712	260584	260600	260616	260760	260648	260632
2	260491	260507	260523	260571	260555	260539	260667	260683	260699	260747	260731	260715	260587	260603	260619	260763	260651	260635
3	260493	260509	260525	260573	260557	260541	260669	260685	260701	260749	260733	260717	260589	260605	260621	260765	260653	260637
4	260495	260511	260527	260575	260559	260543	260671	260687	260703	260751	260735	260719	260591	260607	260623	260767	260655	260639
5	260497	260513	260529	260577	260561	260545	260673	260689	260705	260753	260737	260721	260593	260609	260625	260769	260657	260641
6	260499	260515	260531	260579	260563	260547	260675	260691	260707	260755	260739	260723	260595	260611	260627	260771	260659	260643
8	260500	260516	260532	260580	260564	260548	260676	260692	260708	260756	260740	260724	260596	260612	260628	260772	260660	260644
10	260487	260501	260517	260565	260549	260533	260661	260677	260693	260741	260725	260709	260581	260597	260613	260757	260645	260629
13	260488	260502	260518	260566	260550	260534	260662	260678	260694	260742	260726	260710	260582	260598	260614	260758	260646	260630
16	257918	260503	260519	260567	260551	260535	260663	260679	260695	260743	260727	260711	260583	260599	260615	260759	260647	260631
20	260489	260505	260521	260569	260553	260537	260665	260681	260697	260745	260729	260713	260585	260601	260617	260761	260649	260633
25	257919	260506	260522	260570	260554	260538	260666	260682	260698	260746	260730	260714	260586	260602	260618	260762	260650	260634
32	260492	260508	260524	260572	260556	260540	260668	260684	260700	260748	260732	260716	260588	260604	260620	260764	260652	260636
40	260494	260510	260526	260574	260558	260542	260670	260686	260702	260750	260734	260718	260590	260606	260622	260766	260654	260638
50	260496	260512	260528	260576	260560	260544	260672	260688	260704	260752	260736	260720	260592	260608	260624	260768	260656	260640
63	260498	260514	260530	260578	260562	260546	260674	260690	260706	260754	260738	260722	260594	260610	260626	260770	260658	260642
Accessories	page 23–25																	

OptiDin BM63 circuit breaker (Icu = 6000 A)																		
Number of poles	3						3+N						4					
Circuit diagrams	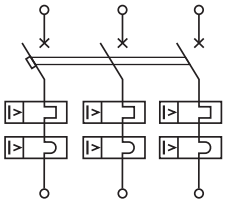						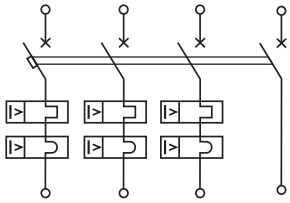						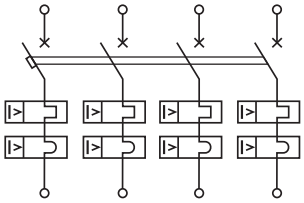					
Rated current In, A	Protective characteristic type						Protective characteristic type						Protective characteristic type					
	B	C	D	Z	L	K	B	C	D	Z	L	K	B	C	D	Z	L	K
1	260776	260792	260808	260856	260840	260824	260952	260968	260984	261032	261016	261000	260872	260888	260904	261048	260936	260920
2	260779	260795	260811	260859	260843	260827	260955	260971	260987	261035	261019	261003	260875	260891	260907	261051	260939	260923
3	260781	260797	260813	260861	260845	260829	260957	260973	260989	261037	261021	261005	260877	260893	260909	261053	260941	260925
4	260783	260799	260815	260863	260847	260831	260959	260975	260991	261039	261023	261007	260879	260895	260911	261055	260943	260927
5	260785	260801	260817	260865	260849	260833	260961	260977	260993	261041	261025	261009	260881	260897	260913	261057	260945	260929
6	260787	260803	260819	260867	260851	260835	260963	260979	260995	261043	261027	261011	260883	260899	260915	261059	260947	260931
8	260788	260804	260820	260868	260852	260836	260964	260980	260996	261044	261028	261012	260884	260900	260916	261060	260948	260932
10	260773	260789	260805	260853	260837	260821	260949	260965	260981	261029	261013	260997	260869	260885	260901	261045	260933	260917
13	260774	260790	260806	260854	260838	260822	260950	260966	260982	261030	261014	260998	260870	260886	260902	261046	260934	260918
16	260775	260791	260807	260855	260839	260823	260951	260967	260983	261031	261015	260999	260871	260887	260903	261047	260935	260919
20	260777	260793	260809	260857	260841	260825	260953	260969	260985	261033	261017	261001	260873	260889	260905	261049	260937	260921
25	260778	260794	260810	260858	260842	260826	260954	260970	260986	261034	261018	261002	260874	260890	260906	261050	260938	260922
32	260780	260796	260812	260860	260844	260828	260956	260972	260988	261036	261020	261004	260876	260892	260908	261052	260940	260924
40	260782	260798	260814	260862	260846	260830	260958	260974	260990	261038	261022	261006	260878	260894	260910	261054	260942	260926
50	260784	260800	260816	260864	260848	260832	260960	260976	260992	261040	261024	261008	260880	260896	260912	261056	260944	260928
63	260786	260802	260818	260866	260850	260834	260962	260978	260994	261042	261026	261010	260882	260898	260914	261058	260946	260930
Accessories	page 23–25																	

OptiDin BM63 circuit breaker (Icu = 10000 A)																		
Number of poles	1						1+N						2					
Circuit diagrams	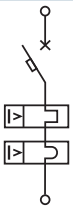						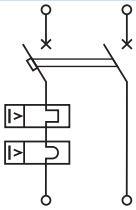						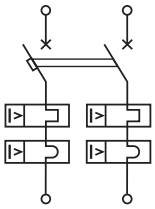					
Rated current In, A	Protective characteristic type						Protective characteristic type						Protective characteristic type					
	B	C	D	Z	L	K	B	C	D	Z	L	K	B	C	D	Z	L	K
1	260227	249245	249204	262538	260189	262554	262661	262677	249159	260217	262720	262736	262569	260230	262598	262614	262630	262645
2	262509	249271	262525	262539	260190	262555	262662	262678	262690	262705	262721	262737	262570	262585	262599	262615	262631	262646
3	262510	249273	262526	262540	260191	262556	262663	262679	262691	262706	262722	262738	262571	262586	262600	262616	262632	262647
4	262511	249274	262527	262541	260192	262557	262664	262680	262692	262707	262723	262739	262572	262587	262601	262617	262633	262648
5	262512	249250	262528	262542	260193	262558	262665	262681	262693	262708	262724	262740	262573	262588	262602	262618	262634	262649
6	262513	249252	262529	262543	260194	262559	262666	262682	262694	262709	262725	262741	262574	262589	262603	262619	262635	262650
8	262514	249253	262530	262544	260195	262560	262667	262683	262695	262710	262726	262742	262575	262590	262604	262620	262636	262651
10	262515	249249	262531	262545	260196	262561	262668	262684	262696	262711	262727	262743	262576	262591	262605	262621	262637	262652
13	262516	249254	262532	262546	260197	262562	262669	262685	262697	262712	262728	262744	262577	262592	262606	262622	262638	262653
16	260228	249256	249205	262547	260198	262563	262670	249174	262698	262713	262729	262745	262578	261342	262607	262623	262639	262654
20	262517	262521	262533	262548	260199	262564	262671	262686	262699	262714	262730	262746	262579	262593	262608	262624	262640	262655
25	260229	249258	262534	262549	260200	262565	262672	262687	262700	262715	262731	262747	262580	262594	262609	262625	262641	262656
32	265625	249261	262535	262550	260201	262566	262673	249178	-	262716	262732	-	262581	262595	262610	262626	262642	262657
40	262518	262522	-	262551	260202	-	262674	262688	-	262717	262733	-	262582	262596	-	262627	262643	-
50	262519	262523	-	262552	260203	-	262675	262689	-	262718	262734	-	262583	262597	-	262628	262644	-
63	262520	262524	-	262553	260204	-	262676	260237	-	262719	262735	-	262584	260222	-	262629	260207	-
Accessories	page 23–25																	

OptiDin BM63 circuit breaker (Icu = 10000 A)																		
Number of poles	3						3+N						4					
Circuit diagrams	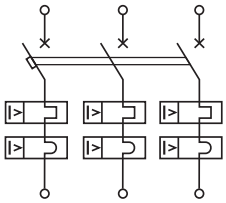						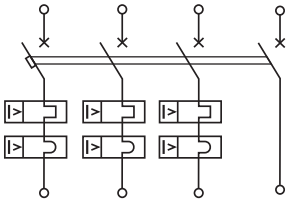						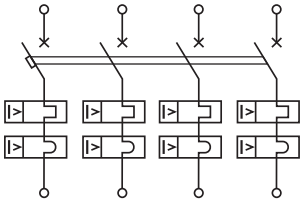					
Rated current In, A	Protective characteristic type						Protective characteristic type						Protective characteristic type					
	B	C	D	Z	L	K	B	C	D	Z	L	K	B	C	D	Z	L	K
1	262752	262768	249203	262786	262801	260211	262922	262938	260231	262964	262980	260214	262830	262846	262861	262877	262892	262907
2	262753	262769	262772	262787	262802	262817	262923	262939	262950	262965	262981	262995	262831	262847	262862	262878	262893	262908
3	262754	262770	262773	262788	262803	262818	262924	262940	262951	262966	262982	262996	262832	262848	262863	262879	262894	262909
4	262755	249288	262774	262789	262804	262819	262925	262941	262952	262967	262983	262997	262833	262849	262864	262880	262895	262910
5	262756	249247	262775	260220	262805	260210	262926	262942	262953	262968	262984	262998	262834	262850	262865	262881	262896	262911
6	262757	249248	262776	262790	262806	262820	262927	262943	262954	262969	262985	262999	262835	262851	262866	262882	262897	262912
8	262758	249246	262777	262791	262807	262821	262928	262944	262955	262970	262986	263000	262836	262852	262867	262883	262898	262913
10	262759	249251	262778	262792	262808	262822	262929	262945	262956	262971	262987	263001	262837	262853	262868	262884	262899	262914
13	262760	249255	262779	262793	262809	262823	262930	262946	262957	262972	262988	263002	262838	262854	262869	262885	262900	262915
16	262761	249257	262780	262794	262810	262824	262931	249160	262958	262973	262989	260213	262839	262855	262870	262886	262901	262916
20	262762	262771	262781	262795	262811	262825	262932	262947	262959	262974	262990	263003	262840	262856	262871	262887	262902	262917
25	262763	249206	262782	262796	262812	262826	262933	253910	262960	262975	262991	263004	262841	262857	262872	262888	262903	262918
32	262764	249207	262783	262797	262813	262827	262934	253911	-	262976	262992	-	262842	262858	262873	262889	262904	262919
40	262765	249192	-	262798	262814	-	262935	262948	-	262977	262993	-	262843	262859	-	262890	262905	-
50	262766	249164	-	262799	262815	-	262936	262949	-	262978	262994	-	262844	262860	-	262891	262906	-
63	262767	249163	-	262800	262816	-	262937	260221	-	262979	260208	-	262845	260224	-	260218	260216	-
Accessories	page 23–25																	

OptiDin BM63 circuit breaker (Icu=15000 A)												
Number of poles	1						2					
Circuit diagrams	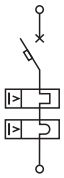						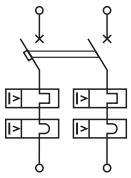					
Rated current In, A	Protective characteristic type						Protective characteristic type					
	B	C	D	Z	L	K	B	C	D	Z	L	K
1	342171	341872	341885	-	-	-	341898	341911	341924	-	-	-
2	341860	341873	341886	-	-	-	341899	341912	341925	-	-	-
3	341861	341874	341887	-	-	-	341900	341913	341926	-	-	-
4	341862	341875	341888	-	-	-	341901	341914	341927	-	-	-
5	341863	341876	341889	-	-	-	341902	341915	341928	-	-	-
6	341864	341877	341890	-	-	-	341903	341916	341929	-	-	-
8	341865	341878	341891	-	-	-	341904	341917	341930	-	-	-
10	341866	341879	341892	-	-	-	341905	341918	341931	-	-	-
13	341867	341880	341893	-	-	-	341906	341919	341932	-	-	-
16	341868	341881	341894	-	-	-	341907	341920	341933	-	-	-
20	341869	341882	341895	-	-	-	341908	341921	341934	-	-	-
25	341870	341883	341896	-	-	-	341909	341922	341935	-	-	-
32	341871	341884	341897	342027	342040	342053	341910	341923	341936	342066	342079	342092
Accessories	page 23–25											

OptiDin BM63 circuit breaker (Icu=15000 A)												
Number of poles	3						4					
Circuit diagrams	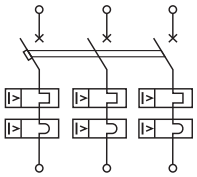						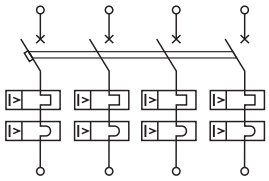					
Rated current In, A	Protective characteristic type						Protective characteristic type					
	B	C	D	Z	L	K	B	C	D	Z	L	K
1	341937	341950	341963	-	-	-	341976	341989	342002	-	-	-
2	341938	341951	341964	-	-	-	341977	341990	342003	-	-	-
3	341939	341952	341965	-	-	-	341978	341991	342004	-	-	-
4	341940	341953	341966	-	-	-	341979	341992	342005	-	-	-
5	341941	341954	341967	-	-	-	341980	341993	342006	-	-	-
6	341942	341955	341968	-	-	-	341981	341994	342007	-	-	-
8	341943	341956	341969	-	-	-	341982	341995	342008	-	-	-
10	341944	341957	341970	-	-	-	341983	341996	342009	-	-	-
13	341945	341958	341971	-	-	-	341984	341997	342010	-	-	-
16	341946	341959	341972	-	-	-	341985	341998	342011	-	-	-
20	341947	341960	341973	-	-	-	341986	341999	342012	-	-	-
25	341948	341961	341974	-	-	-	341987	342000	342013	-	-	-
32	341949	341962	341975	342105	342118	342131	341988	342001	342014	342144	342157	342170
Accessories	page 23–25											

OptiDin BM63 circuit breaker (Icu=20000 A)												
Number of poles	1			2			3			4		
Circuit diagrams	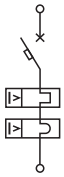			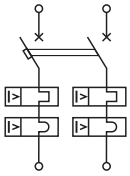			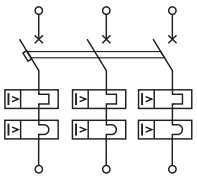			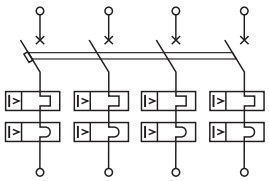		
Rated current In, A	Protective characteristic type			Protective characteristic type			Protective characteristic type			Protective characteristic type		
	Z	L	K	Z	L	K	Z	L	K	Z	L	K
20	342025	342038	342051	342064	342077	342090	342103	342116	342129	342142	342155	342168
25	342026	342039	342052	342065	342078	342091	342104	342117	342130	342143	342156	342169
Accessories	page 23–25											

OptiDin BM63 circuit breaker (Icu=25000 A)												
Number of poles	1			2			3			4		
Circuit diagrams	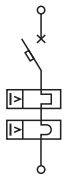			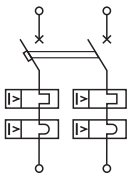			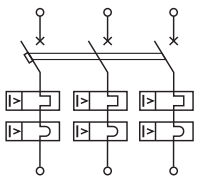			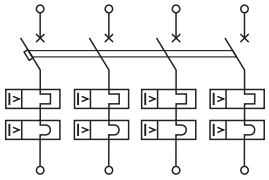		
Rated current In, A	Protective characteristic type			Protective characteristic type			Protective characteristic type			Protective characteristic type		
	Z	L	K	Z	L	K	Z	L	K	Z	L	K
1	342015	342028	342041	342054	342067	342080	342093	342106	342119	342132	342145	342158
2	342016	342029	342042	342055	342068	342081	342094	342107	342120	342133	342146	342159
3	342017	342030	342043	342056	342069	342082	342095	342108	342121	342134	342147	342160
4	342018	342031	342044	342057	342070	342083	342096	342109	342122	342135	342148	342161
5	342019	342032	342045	342058	342071	342084	342097	342110	342123	342136	342149	342162
6	342020	342033	342046	342059	342072	342085	342098	342111	342124	342137	342150	342163
8	342021	342034	342047	342060	342073	342086	342099	342112	342125	342138	342151	342164
10	342022	342035	342048	342061	342074	342087	342100	342113	342126	342139	342152	342165
13	342023	342036	342049	342062	342075	342088	342101	342114	342127	342140	342153	342166
16	342024	342037	342050	342063	342076	342089	342102	342115	342128	342141	342154	342167
Accessories	page 23–25											

Technical specification

Basic specifications		
As per GOST IEC 60898-1, GOST R 50030.2		
Pollution rating		3
Rated impulse voltage Uimp, V		4000
Test temperature, °C		+30
Protective characteristic type	B	3In to 5In
	C	5In to 10In
	D	10In to 20In
	Z	3,2In to 4,8In
	L	6,4In to 9,6In
	K	9,6In to 14,4In
Application category		A
Energy limiting class		3
Additional specifications		
Protection class as per GOST 14254		IP20
Silver content, g/pole		0,0595
CB wear resistance, cycles	switching	4000
	general	10000
Overvoltage category		IV
Operating temperature range, °C		-60 to +40
Storage temperature range, °C		-65 to +50
Weight, g		
Number of poles	1P	125
	1P+N	260
	2P	225
	3P	390
	3P+N	530
	4P	490

Accessories suitable for OptiDin BM63

Snap-on accessories for miniature circuit breakers			
Code	Name	Code	Name
249158	OptiDin BM63-MSSK 2	249184	OptiDin BM63-NR230
249189	OptiDin BM63-MSK 1	249177	OptiDin BM63-NR24
249197	OptiDin BM63-MSK 2	333065	OptiDin BM63-RMMN

WARNING!!! Snap-on accessories can be attached only to the line of OptiDin BM63 6 kA...25 kA miniature circuit breakers, the line of OptiDin VD63, OptiDin D63 6 kA residual current devices, load breakers OptiDin BM63P and current limiters OptiDin BM63-OT.

Connection

Rated current In, A	Tightening torque, N/m	Without preparation of current conductor core, mm²			With preparation of the conductor current carrying wire, mm²		
		Flexible copper (multicore)	Rigid copper (multicore and single-core)	Aluminum (multicore and single-core)	Flexible copper (multicore)	Flexible aluminum	Rigid aluminum
1–63	2	1,5–10	1,5–16	2,5–10	25	16	25

For overall dimensions, see p. 22

OptiDin BM63-OT Modular current limiters up to 63 A

OptiDin BM63-OT current limiters are designed for use in electrical circuits with voltage up to 400 V AC, frequency 50 Hz to protect such circuits against overcurrent and short circuits, to limit withdrawal of the pre-set maximum power during operation of electrical devices for domestic and industrial purposes, and to conduct current in normal duty and operational on-off switching (up to 30 times a day) modes.

The limiters comply with the requirements of GOST IEC 60898-1, TR TS 004/2011 and are manufactured as per TS 3421-040-05758109-2009.

Items

OptiDin BM63-OT		
Rated voltage Un, V	230	400
Number of poles	1P	3P
Circuit diagrams	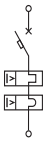	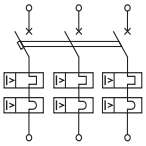
Rated current In, A	Protective characteristic type	Protective characteristic type
	D	D
6	219947	219958
10	219949	219960
16	219951	219962
20	219952	219963
25	219953	219964
32	219954	219965
40	219955	219966
50	219956	219967
63	219957	219968
Accessories	page 23–25	

Technical specification

Basic specifications		
As per GOST IEC 60898-1		
Rated limit short-circuit tripping capacity Icn, A		6000
Pollution rating		3
Rated impulse voltage Uimp, V		4000
Test temperature, °C		+30
Protective characteristic type	D	10In to 20In
Application category		A
Energy limiting class		3
Additional specifications		
Protection class as per GOST 14254		IP20
Silver content, g/pole		0,0595
CB wear resistance, cycles	switching	10000
	mechanical	20000
Overvoltage category		IV
Operating temperature range, °C		-60 to +40
Storage temperature range, °C		-65 to +50
Weight, g		
Number of poles	1P	125
	3P	375

Connection

Rated current In, A	Tightening ptorque, N/m	Without preparation of current conductor core, mm²			With preparation of the conductor current carrying wire, mm²		
		Flexible copper (multicore)	Rigid copper (multicore and single-core)	Aluminum (multicore and single-core)	Flexible copper (multicore)	Flexible aluminum	Rigid aluminum
1–63	2	1,5–10	1,5–16	2,5–10	25	16	25

For overall dimensions, see p. 22

OptiDin BM63 DC Miniature DC circuit breakers up to 50 A

OptiDin BM63 DC circuit breakers are designed to protect DC electrical circuits from overcurrent and short circuit currents, to conduct current in normal duty and operational on-off switching modes of these circuits.

The circuit breakers comply with the requirements of GOST IEC 60898-2 (direct current), GOST R 50030.2 (industrial application), TR TS 004/2011 and are manufactured as per TS 3421-040-05758109-2009, TS 3421--040-05758109-2009D.

Items

OptiDin BM63 DC										
Rated voltage Un, V	220					440				
Number of poles	1P					2P				
Circuit diagrams						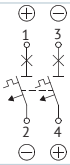				
Rated current In, A	Protective characteristic type					Protective characteristic type				
	B	C	Z	L	K	B	C	Z	L	K
1	261145	261160	261205	261190	261175	261220	261235	261280	261265	261250
2	261148	261163	261208	261193	261178	261223	261238	261283	261268	261253
3	261150	261165	261210	261195	261180	261225	261240	261285	261270	261255
4	261152	261167	261212	261197	261182	261227	261242	261287	261272	261257
5	261154	261169	261214	261199	261184	261229	261244	261289	261274	261259
6	261155	261170	261215	261200	261185	261230	261245	261290	261275	261260
8	261156	261171	261216	261201	261186	261231	261246	261291	261276	261261
10	261142	261157	261202	261187	261172	261217	261232	261277	261262	261247
13	261143	261158	261203	261188	261173	261218	261233	261278	261263	261248
16	261144	261159	261204	261189	261174	261219	261234	261279	261264	261249
20	261146	261161	261206	261191	261176	261221	261236	261281	261266	261251
25	261147	261162	261207	261192	261177	261222	261237	261282	261267	261252
32	261149	261164	261209	261194	261179	261224	261239	261284	261269	261254
40	261151	261166	261211	261196	261181	261226	261241	261286	261271	261256
50	261153	261168	261213	261198	261183	261228	261243	261288	261273	261258
Accessories	page 23–25									

OptiDin BM63 DC										
Rated voltage Un, V	660					880				
Number of poles	3P					4P				
Circuit diagrams	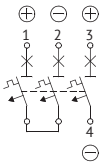					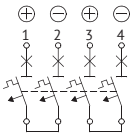				
Rated current In, A	Protective characteristic type					Protective characteristic type				
	B	C	Z	L	K	B	C	Z	L	K
1	337987	338002	338048	338033	338017	338063	338078	338123	338108	338093
2	337990	338005	338051	338036	338020	338066	338081	338126	338111	338096
3	337992	338007	338053	338038	338022	338068	338083	338128	338113	338098
4	337994	338009	338055	338040	338024	338070	338085	338130	338115	338100
5	337996	338011	338057	338042	338027	338072	338087	338132	338117	338102
6	337997	338012	338058	338043	338028	338073	338088	338133	338118	338103
8	337998	338013	338059	338044	338029	338074	338089	338134	338119	338104
10	337984	337999	338045	338030	338014	338060	338075	338120	338105	338090
13	337985	338000	338046	338031	338015	338061	338076	338121	338106	338091
16	337986	338001	338047	338032	338016	338062	338077	338122	338107	338092
20	337988	338003	338049	338034	338018	338064	338079	338124	338109	338094
25	337989	338004	338050	338035	338019	338065	338080	338125	338110	338095
32	337991	338006	338052	338037	338021	338067	338082	338127	338112	338097
40	337993	338008	338054	338039	338023	338069	338084	338129	338114	338099
50	337995	338010	338056	338041	338025	338071	338086	338131	338116	338101
Accessories	page 23–25									

Technical specification

Basic specifications		
As per GOST IEC 60898-2, GOST R 50030.2		
Pollution rating		3
Rated impulse voltage Uimp, V		4000
Test temperature, °C		+30 °C
Protective characteristic type	B	4In to 7In
	C	7In to 15In
	Z	3,2In to 8In
	L	6,4In to 15In
	K	9,6In to 30In
Application category		A
Energy limiting class		3
Additional specifications		
Protection class as per GOST 14254		IP20
Silver content, g/pole		0,0595
CB wear resistance B, C, cycles	switching	1000
	general	10000
CB wear resistance Z, L, K, cycles	switching	1500
	general	10000
Overvoltage category		IV
Operating temperature range, °C		-60 to +40
Storage temperature range, °C		-65 to +50
Weight, g		
Number of poles	1P	125
	2P	250
	3P	375
	4P	500

Accessories suitable for OptiDin BM63

Snap-on accessories for miniature circuit breakers	
Code	Name
249158	OptiDin BM63-MSSK 2
249189	OptiDin BM63-MSK 1
249197	OptiDin BM63-MSK 2
249184	OptiDin BM63-NR230
249177	OptiDin BM63-NR24
333065	OptiDin BM63-RMMN

WARNING!!! Snap-on accessories can be attached only to the line of OptiDin BM63 6 kA...25 kA miniature circuit breakers, the line of OptiDin VD63, OptiDin D63 6 kA residual current devices, load breakers OptiDin BM63P and current limiters OptiDin BM63-OT.

Connection

Rated current In, A	Tightening ptorque, N/m	Without preparation of current conductor core, mm²			With preparation of the conductor current carrying wire, mm²		
		Flexible copper (multicore)	Rigid copper (multicore and single-core)	Aluminum (multicore and single-core)	Flexible copper (multicore)	Flexible aluminum	Rigid aluminum
1–50	2	1,5–10	1,5–16	2,5–10	25	16	25

For overall dimensions, see p. 22

OptiDin BM63 DC RP Miniature DC Circuit Breakers up to 50 A

OptiDin BM63 DC RP circuit breakers are designed to protect DC electrical circuits from overcurrent and short circuit currents, to conduct current in normal duty and operational on-off switching modes of these circuits. This design version of the circuit breakers is made with reversed poles to enable the bottom connection of the mains.

The circuit breakers comply with the requirements of GOST IEC 60898-2 (direct current), GOST R 50030.2 (industrial application), TR TS 004/2011 and are manufactured as per TU 3421240057581092009, TU 3421-040057581092009D.

Items

OptiDin BM63 DC RP										
Rated voltage Un, V	220					440				
Number of poles	1P					2P				
Circuit diagrams						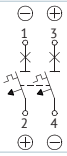				
Rated current In, A	Protective characteristic type					Protective characteristic type				
	B	C	Z	L	K	B	C	Z	L	K
1	339174	339189	339234	339219	339204	339249	339264	339309	339294	339279
2	339177	339192	339237	339222	339207	339252	339267	339312	339297	339282
3	339179	339194	339239	339224	339209	339254	339269	339314	339299	339284
4	339181	339196	339241	339226	339211	339256	339271	339316	339301	339286
5	339183	339198	339243	339228	339213	339258	339273	339318	339303	339288
6	339184	339199	339244	339229	339214	339259	339274	339319	339304	339289
8	339185	339200	339245	339230	339215	339260	339275	339320	339305	339290
10	339171	339186	339231	339216	339201	339246	339261	339306	339291	339276
13	339172	339187	339232	339217	339202	339247	339262	339307	339292	339277
16	339173	339188	339233	339218	339203	339248	339263	339308	339293	339278
20	339175	339190	339235	339220	339205	339250	339265	339310	339295	339280
25	339176	339191	339236	339221	339206	339251	339266	339311	339296	339281
32	339178	339193	339238	339223	339208	339253	339268	339313	339298	339283
40	339180	339195	339240	339225	339210	339255	339270	339315	339300	339285
50	339182	339197	339242	339227	339212	339257	339272	339317	339302	339287
Accessories	page 23–25									

OptiDin BM63 DC RP										
Rated voltage Un, V	660					880				
Number of poles	3P					4P				
Circuit diagrams	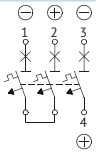					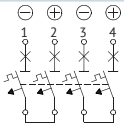				
Rated current In, A	Protective characteristic type					Protective characteristic type				
	B	C	Z	L	K	B	C	Z	L	K
1	339324	339339	339384	339369	339354	339399	339414	339459	339444	339429
2	339327	339342	339387	339372	339357	339402	339417	339462	339447	339432
3	339329	339344	339389	339374	339359	339404	339419	339464	339449	339434
4	339331	339346	339391	339376	339361	339406	339421	339466	339451	339436
5	339333	339348	339393	339378	339363	339408	339423	339468	339453	339438
6	339334	339349	339394	339379	339364	339409	339424	339469	339454	339439
8	339335	339350	339395	339380	339365	339410	339425	339470	339455	339440
10	339321	339336	339381	339366	339351	339396	339411	339456	339441	339426
13	339322	339337	339382	339367	339352	339397	339412	339457	339442	339427
16	339323	339338	339383	339368	339353	339398	339413	339458	339443	339428
20	339325	339340	339385	339370	339355	339400	339415	339460	339445	339430
25	339326	339341	339386	339371	339356	339401	339416	339461	339446	339431
32	339328	339343	339388	339373	339358	339403	339418	339463	339448	339433
40	339330	339345	339390	339375	339360	339405	339420	339465	339450	339435
50	339332	339347	339392	339377	339362	339407	339422	339467	339452	339437
Accessories	page 23–25									

Technical specification

Basic specifications		
As per GOST IEC 60898-2, GOST R 50030.2		
Pollution rating		3
Rated impulse voltage Uimp, V		4000
Test temperature, °C		+30 °C
Protective characteristic type	B	4In to 7In
	C	7In to 15In
	Z	3,2In to 8In
	L	6,4In to 15In
	K	9,6In to 30In
Application category		A
Energy limiting class		3
Additional specifications		
Protection class as per GOST 14254		IP20
Silver content, g/pole		0,0595
CB wear resistance B, C, cycles	switching	1000
	general	10000
CB wear resistance Z, L, K, cycles	switching	1500
	general	10000
Overvoltage category		IV
Operating temperature range, °C		-60 to +40
Storage temperature range, °C		-65 to +50
Weight, g		
Number of poles	1P	125
	2P	250
	3P	375
	4P	500

Accessories suitable for OptiDin BM63

Snap-on accessories for miniature circuit breakers	
Code	Name
249158	OptiDin BM63-MSSK 2
249189	OptiDin BM63-MSK 1
249197	OptiDin BM63-MSK 2
249184	OptiDin BM63-NR230
249177	OptiDin BM63-NR24
333065	OptiDin BM63-RMMN

WARNING!!! Snap-on accessories can be attached only to the line of OptiDin BM63 6 kA...25 kA miniature circuit breakers, the line of OptiDin VD63, OptiDin D63 6 kA residual current protection devices, load breakers OptiDin BM63P and current limiters OptiDin BM63-OT.

Connection

Rated current In, A	Tightening ptorque, N/m	Without preparation of current conductor core, mm²			With preparation of the conductor current carrying wire, mm²		
		Flexible copper (multicore)	Rigid copper (multicore and single-core)	Aluminum (multicore and single-core)	Flexible copper (multicore)	Flexible aluminum	Rigid aluminum
1–50	2	1,5–10	1,5–16	2,5–10	25	16	25

For overall dimensions, see p. 22

OptiDin BM125 Miniature AC circuit breakers up to 125 A

OptiDin BM125 circuit breakers are designed to protect electrical circuits from overcurrent and short circuit currents, to conduct current in normal duty and operational on-off switching modes of these circuits.

The circuit breakers comply with the requirements of GOST IEC 60947-2, TR TS 004/2011 and are manufactured as per TS3421-040-5758109-2009.

The range includes design versions of OptiDin BM125 circuit breakers assembled with a shunt trip. Availability of the shunt trip allows to remotely disconnect the protected power supply lines.

Designation

OptiDin BM125 - 1 N C 125 - NO - 8In - UHL3 REG

(1) (2) (3) (4) (5) (6) (7) (8) (9) (10)

1	Series	OptiDin					
2	Configuration	BM125					
3	Number of poles	1P	1P+N	2P	3P	3P+N	4P
4	Pole with no release device	N					
5	Protective characteristic designation	C			D		
6	Rated current value of overcurrent release, A	80, 100, 125					
7	Presence of module with shunt trip	NO					
8	Short-circuit tripping device setpoint	8In, 14In					
9	Designation of climatic category and placement category as per GOST 15150	UHL3 (international TC3), OM4 (international UM4)					
10	Acceptance by the Sea and River Shipping Register	REG					

Items

OptiDin BM125 circuit breaker										
Number of poles	1P		1P+N		2P		3P		3P+N	
Circuit diagrams	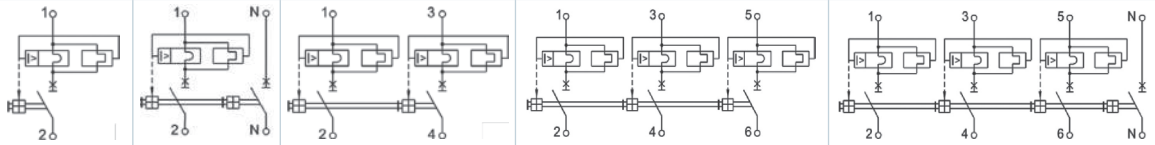									
Rated current, In	Protective characteristic type						Protective characteristic type			
	C	D	C	D	C	D	C	D	C	D
80	138534	138596	138540	138600	138537	138597	138543	138602	138547	138604
100	138535	138596	138541	138601	138538	138599	138545	138603	138593	138605
125	138536		138542		138539		138546		138594	

OptiDin BM125 circuit breaker with shunt trip						
Number of poles	1P		1P+N		2P	
Circuit diagrams	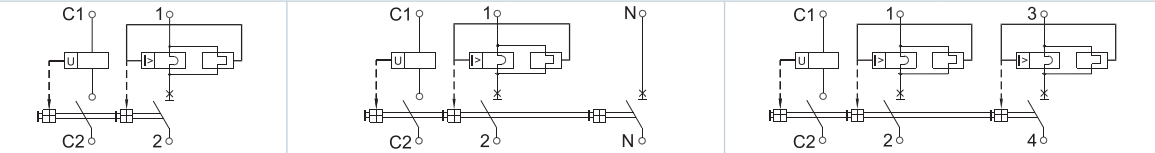					
Rated current, In	Protective characteristic type					
	C	D	C	D	C	D
80	336365	336367	336375	336377	336370	336372
100	336363	336366	336373	336376	336368	336371
125	336364	-	336374	-	336369	-

OptiDin BM125 circuit breaker with shunt trip				
Number of poles	3P		3P+N	
Circuit diagrams	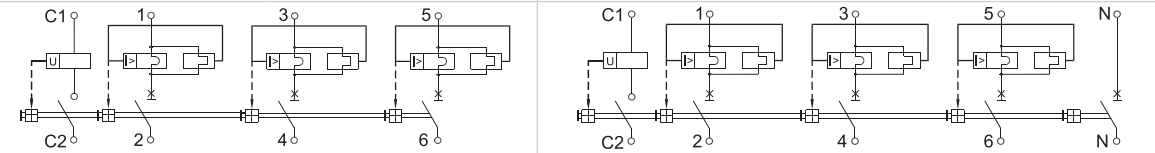			
Rated current, In	Protective characteristic type			
	C	D	C	D
80	336380	336382	336385	336387
100	336378	336381	336383	336386
125	336379	-	336384	-

See page 23-25 for accessories

Technical specification

Basic specifications		
As per GOST IEC 60947-2		
Pollution rating		3
Rated impulse voltage Uimp, V		4000
Test temperature, °C		+30
Protective characteristic type	C	5In to 10In
	D	10In to 20In
Application category		A
Energy limiting class		3
Additional specifications		
Protection class as per GOST 14254		IP20
Silver content per pole, max., g		0,66
Wear resistance of circuit breakers C, D for In = 80, 100 A, cycles	switching	1500
	general	10000
Wear resistance of circuit breakers C, D for In = 125 A, cycles	switching	1000
	general	8000
Overvoltage category		IV
Operating temperature range, °C		-60 to +40
Storage temperature range, °C		-65 to +50
Weight, g		
Number of poles	1P	220
	2P	450
	3P	680
	3P+N	900

Accessories suitable for OptiDin BM125

Snap-on accessories for miniature circuit breakers	
Code	Name
329843	OptiDin BM125-MSK 2

Connection

Rated current, A	Tightening ptorque, N/m	Cross-section of connected conductors, mm²
80–125	3,5	2,5–50

For overall dimensions, see p. 22

Overall dimensions (mm)

OptiDin BM63 and OptiDin BM63DC

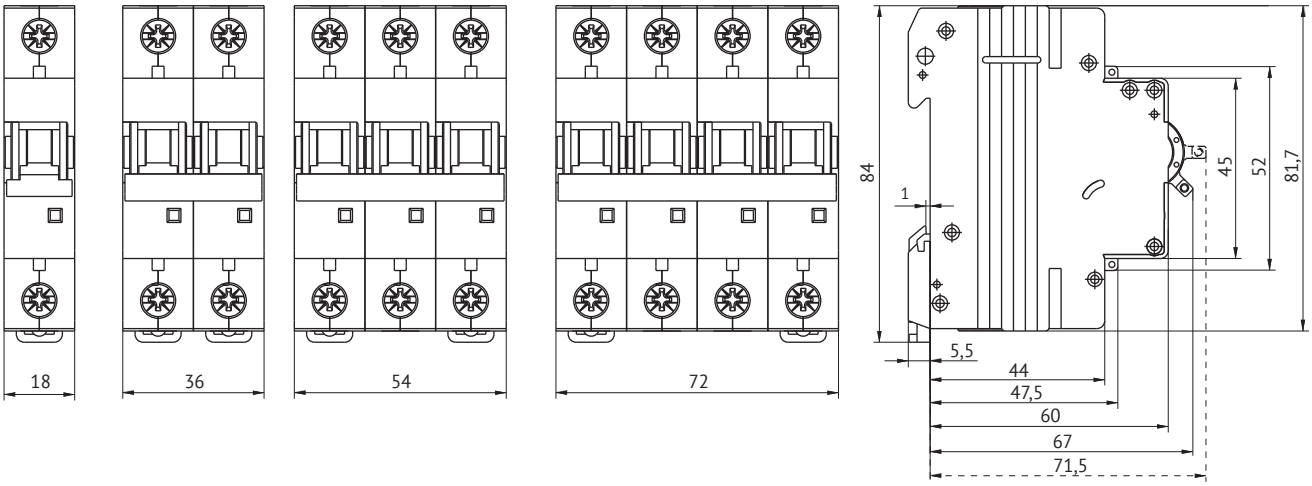

OptiDin BM63OT

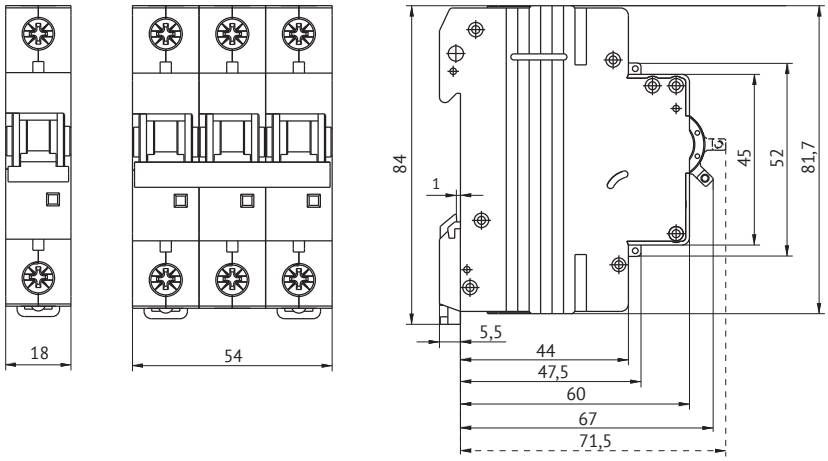

OptiDin BM125

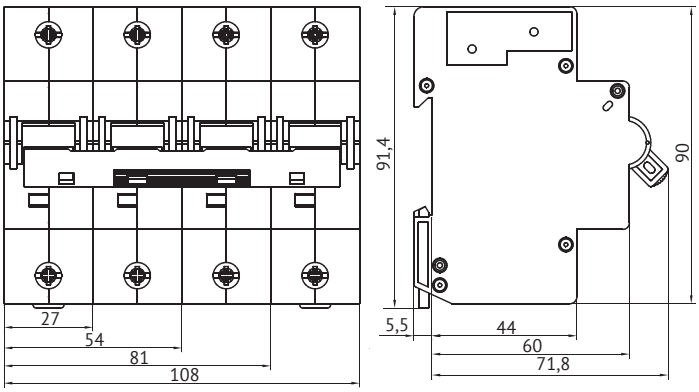

BM125-NR230

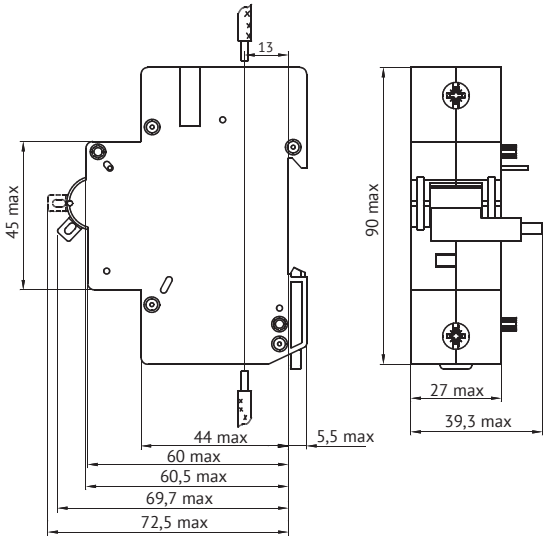

Supplied only complete with a circuit breaker.

Accessories for OptiDin miniature circuit breakers, residual current circuit breakers, load breakers and current limiters

Module of free and signal contacts OptiDin BM63-MSSK 2

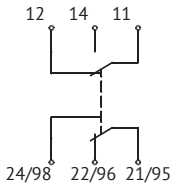

Function			
1. Informs about circuit breaker disconnection by a thermal or electromagnetic release; 2. Informs about the state of the circuit breaker main contacts («on», «off»).			
Technical specification			
Rated operating current by application category, Ie	A	AC-13	3
		AC-15	2
Rated operating voltage in 50 Hz AC circuit, Ue	B		230
Rated operating current by application category, Ie	A	DC-12	0,5
Rated operating voltage in DC circuit, Ue	B		220
Number of contacts	pcs		2P (two switching)
Rated insulation voltage, Ui	B		230
Rated impulse withstand voltage, Uimp	B		2500
Rated conditional short-circuit current	A		1000
Switching wear resistance, min.	cycles B-O		4000
Other characteristics			
Cross-section of connected conductors	mm²		0,5–2,5
Code			249158
Application			
Free contacts can be used in automation systems to signal the position of the circuit breaker main contacts — «closed» or «open» when switched on (off) manually, as well as after automatic opening caused by overcurrent or short circuit. Signaling contacts can be used in automation systems to signal disconnection of the circuit breaker only after automatic opening caused by overcurrent or short circuit.			

Free contact module OptiDin BM63-MSK 1

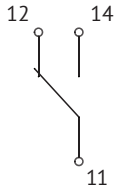

Technical specification			
Rated operating current by application category, Ie	A	AC-13	3
		AC-15	2
Rated operating voltage in 50 Hz AC circuit, Ue	B		230
Rated operating current by application category, Ie	A	DC-12	0,5
Rated operating voltage in DC circuit, Ue	B		220
Number of contacts	pcs		1P (one switching)
Rated insulation voltage, Ui	B		230
Rated impulse withstand voltage, Uimp	B		2500
Rated conditional short-circuit current	A		1000
Switching wear resistance, min.	cycles B-O		4000
Other characteristics			
Cross-section of connected conductors	mm²		0,5–2,5
Code			249189
Application			
The module of auxiliary contacts with one switching contact element is used for signaling about the position of the main contacts of the switch.			

Free contact module OptiDin BM63-MSK 2

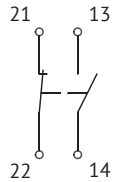

Technical specification			
Rated operating current by application category, Ie	A	AC-13	3
		AC-15	2
Rated operating voltage in 50 Hz AC circuit, Ue	B		230
Rated operating current by application category, Ie	A	DC-12	0,5
Rated operating voltage in DC circuit, Ue	B		220
Number of contacts	pcs		1P+13 (one NC contact, one NO contact)
Rated insulation voltage, Ui	B		230
Rated impulse withstand voltage, Uimp	B		2500
Rated conditional short-circuit current	A		1000
Switching wear resistance, min	cycles B-O		4000
Other characteristics			
Cross-section of connected conductors	mm²		0,5–2,5
Code			249197
Application			
Free contacts module with one opening contact and one closing contact allows connection of two independent signaling circuits, thus expanding the process automation functionality.			

Free contact module OptiDin BM125-MSK 2

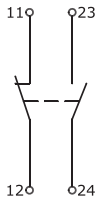

Technical specification				
Rated operating voltage and rated operating current	Current type	Application category	Rated operating voltage (Ue), V	Rated operating current (Ie), A
	Alternating current	AC-13	230	6
			400	2
	Direct current	DC-13	60	4
			110	2
			220	0,5
Rated conditional short-circuit current, A		1000		
Rated insulation voltage (Ui), V		230		
Switching wear resistance, min, cycles B-O		10000		
Number of contacts		1P+13 (one NC contact, one NO contact)		
Other characteristics				
Cross-section of connected conductors, мм²		0,5 to 4		
Code		329843		
Application				
Free contact module with one opening contact and one closing contact allows connection of two independent signaling circuits, thus expanding the process automation functionality.				

OptiDin BM63-NR shunt trip

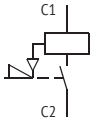

Design version		OptiDin BM63-NR230	OptiDin BM63-NR24
Function			
Designed for remote tripping of the circuit breaker when voltage is applied to the winding of the shunt release, structurally it is an electromagnet with a multi-turn voltage coil.			
Technical specification			
Tripping range			
under AC voltage, Ut	B	110...400	12...110
under DC voltage, Ut	B	110...220	12...60
Tripping time of circuit breakers when triggered by a shunt release, max.	sec	0,04	
Wear resistance of circuit breakers when triggered by a shunt release, min.	cycles B-O	1500	
Other characteristics			
Code		249184	249177

Undervoltage and overvoltage release OptiDin BM63-RMMN

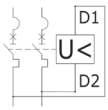

Design version		OptiDin BM63-RMMN
Function		
Designed to automatically disconnect the circuit breaker when the mains voltage drops or rises above the set levels.		
Technical specification		
Tripping range		
minimum tripping voltage, Ut	B	165 V ± 10%
maximum tripping voltage, Ut	B	265 V ± 10%
Rated insulation voltage, Ui	B	230
Rated impulse withstand voltage, Uimp	кВ	2,5
Other characteristics		
Code		333065

WARNING!!! Snap-on accessories can be attached only to the line of OptiDin BM63 6 kA...25 kA miniature circuit breakers, the line of OptiDin VD63, OptiDin D63 6 kA residual current protection devices, load breakers OptiDin BM63P and current limiters OptiDin BM63-OT.

Overall dimensions of accessories (mm)

Free contact module
OptiDin BM63-MSK 1, OptiDin BM63-MSK 2

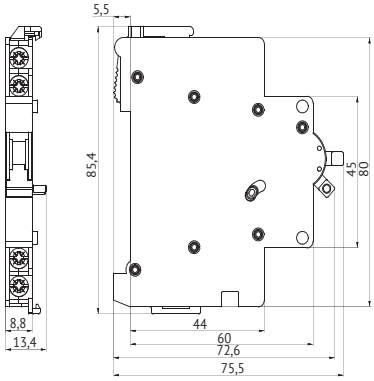

Module of free and signal contacts
OptiDin BM63-MSSK 2

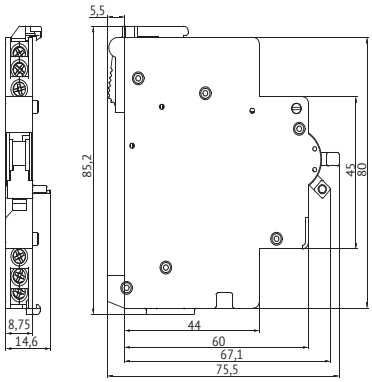

Modules with shunt trip OptiDin BM63-NR230 and OptiDin BM63-NR24
Undervoltage and overvoltage release OptiDin BM63-RMMN

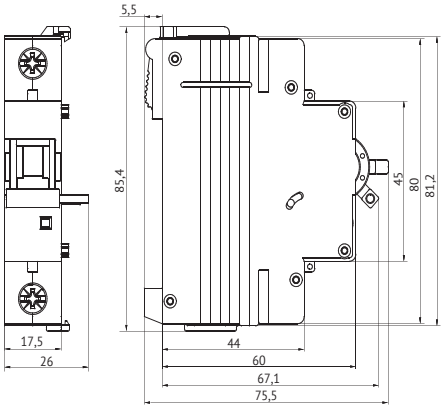

Free contact module OptiDin BM125-MSK 2

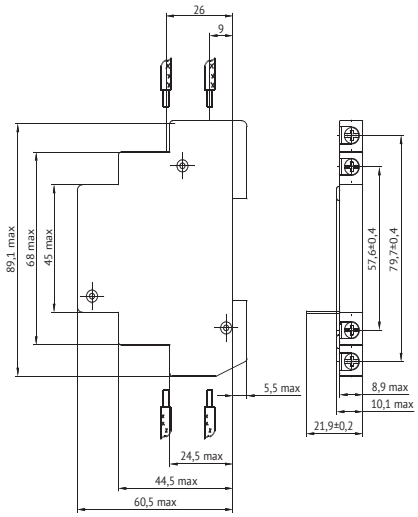

Connection

Connecting modules with auxiliary contacts to a circuit breaker or to a module with a shunt trip or an undervoltage/overvoltage release

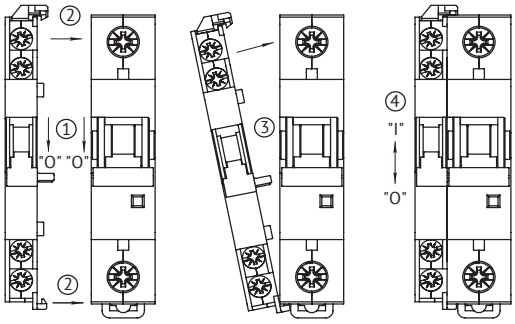

see Operation manual for auxiliary contact modules ГЖИК.685112.030РЭ

Connection of a shunt trip or undervoltage/overvoltage release in a separate module to the circuit breaker shall be carried out in the following sequence

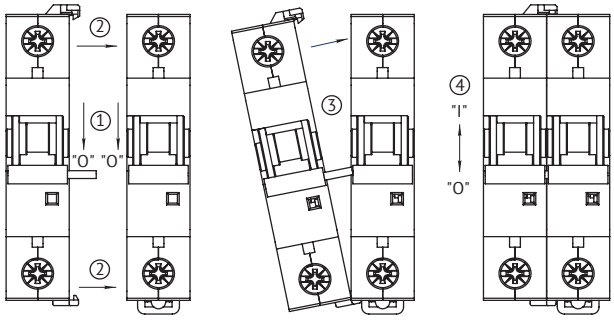

see Operation manual for shunt trip ГЖИК.641266.029РЭ and operation manual for undervoltage and overvoltage release ГЖИК.641266.059РЭ

OptiDin handle mechanical locking device

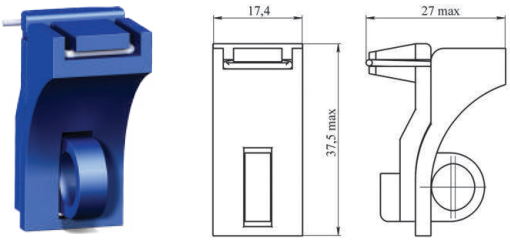

The device is designed to completely block the circuit breaker handle against unauthorized and accidental access, thus guaranteeing the safety of personnel.	
Other characteristics	
Padlock shackle diameter, mm	8
Code	113541

WARNING!!! Snap-on accessories can be attached only to the line of OptiDin BM63 6 kA...25 kA miniature circuit breakers, the line of OptiDin VD63, OptiDin D63 6 kA residual current protection devices, load breakers OptiDin BM63P and current limiters OptiDin BM63-OT

OptiDin PA10 modular socket

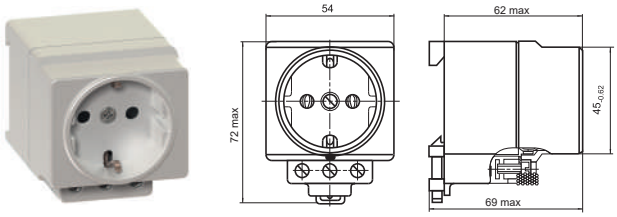

Sockets are intended for connection of electric equipment fitted with three-wire plugs, which provide grounding of equipment metal cases.	
Technical specification	
Rated voltage, V	230
Frequency, Hz	50
Rated current, A	16
Other characteristics	
Service life, years	10
Operating temperature range, °C	-25 to +40
Climatic version	UH in compliance with GOST 15150
Weight, g	120
Code	111493

OptiDin

↗ Modular load breakers

OptiDin BM63PL, OptiDin BM63P load breakers (hereinafter referred to as switches) are designed for use in electrical circuits with voltage up to 400 V AC, frequency 50/60 Hz, to conduct current in normal duty and operational on-off switching modes of these circuits under load.

The switches comply with the requirements of GOST IEC 60947-3, TR TS 004/2011.

Designation

OptiDin BM63PL - 1 - 40 - UHL3

(1) (2) (3) (4) (5)

1	Series	OptiDin			
2	Configuration	BM63PL, BM63P			
3	Number of poles	1P	2P	3P	4P
4	Rated current value, A	32, 40, 63, 80, 100, 125			
5	Climatic version	UHL3 (international TC3)			

Series advantages

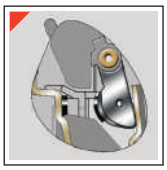

Silver-containing soldering on the moving contact to increase wear resistance and reduce the contact resistance value.

The QR code helps obtain detailed information about the product, full specifications, and related documentation on the official website.

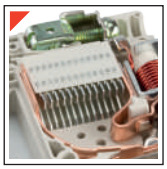

13 plates in the arc quenching chamber effectively quench arcs and ensure safe shutdown in emergencies.

The handle can be locked out to prevent unauthorized switching on/off.

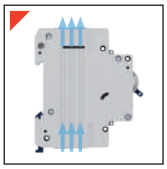

Better cooling due to shaped recesses on the housing.

Special design of the lead terminals provides: the tightest and largest contact area to prevent heating and melting of conductors.

The barcode provides quick identification of the device for sales in retail trade networks, as well as on online trading platforms.

OptiDin BM63PL Modular load breakers for currents up to 125 A

OptiDin BM63PL load breakers (hereinafter referred to as switches) are designed for use in electrical circuits with voltage up to 400 V AC, frequency 50/60 Hz, to conduct current in normal duty and operational on-off switching modes of these circuits under load. The switches comply with the requirements of GOST IEC 60947-3, TR TS 004/2011, TR EAEU 037/2016.

Items

BM63PL Modular load breaker				
Number of poles	1P	2P	3P	4P
Circuit diagrams		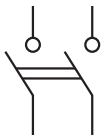	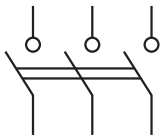	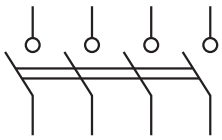
Rated current In, A				
32	328155	328162	328168	328174
40	328157	328163	328169	328175
63	328158	328164	328170	328176
80	328159	328165	328171	328177
100	328160	328166	328172	328178
125	328161	328167	328173	328179

Technical specification

Parameter		Value
Number of poles		1; 2; 3; 4
Rated frequency, Hz		50/60
Rated operating voltage, V, in 50/60 Hz AC circuit	single-pole	230/400
	double-pole	230
	three-pole and four-pole	400
Minimum operating voltage, V		24
Rated operating current, (Ie), A		32, 40, 63, 80, 100, 125
Application category		AC-22A
Rated short-time withstand current (through current) with a passage duration of 1 s, A		1500
Rated activating capacity under short-circuit conditions at a power factor of 0.9, A		2500
Rated conditional short-circuit current, kA		5000
General wear resistance of switch, cycles		14000
Switching wear resistance of switch, cycles		4000
Rated impulse withstand voltage, kV		4
Switch power consumption, max., V·A, per pole		15
Protection class as per GOST 14254		IP20
Cross-section of wire connected to lead terminals, mm^2		1÷50
Climatic category and placement category as per GOST 15150		UHL3
Average service life, years		15
Operation mode		continuous

Connection

Rated current In, A	Tightening ptorque, N/m	Cross-section of connected conductors, mm^2	
		Flexible (multicore) copper and aluminum conductors	Rigid (single-core) copper and aluminum
32–125	3,5	1 до 50	

OptiDin BM63P Modular load breakers for currents up to 63 A

OptiDin BM63P load breakers are designed for use in electrical circuits with voltage up to 400 V AC, frequency 50 Hz and conduction of current in normal duty mode.

OptiDin BM63P breakers comply with the requirements of GOST IEC 60947-3-2016, TR TS 004/2011 and are manufactured as per TS 3424-011-05758109-2009.

A wide range of accessories makes the use of KEAZ modular load breakers a convenient choice for any solution.

Items

OptiDin BM63P Modular load breaker				
Number of poles	1P	2P	3P	4P
Circuit diagrams		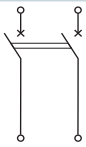	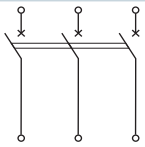	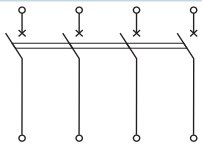
Rated current In, A				
20	332973	332974	332975	332976
32	332870	332880	332898	332969
40	103891	103893	103894	103897
63	103892	103894	103896	103898
Accessories	page 23–25			

Technical specification

Basic specifications		
Rated voltage in 50 Hz AC circuit, V		230/400
Minimum operating voltage, V		24
Additional specifications		
Cross-section of wire connected to lead terminals, mm^2		1,5–25
Switch IP rating		IP20
Silver content, g		0,0595
Wear resistance, min., cycles	Switching	1500
	Mechanical	8500
Operating temperature range, °C		-60 to +40
Weight, g		
Number of poles	1P	120
	2P	240
	3P	360
	4P	480

Overall dimensions (mm)

OptiDin BM63PL

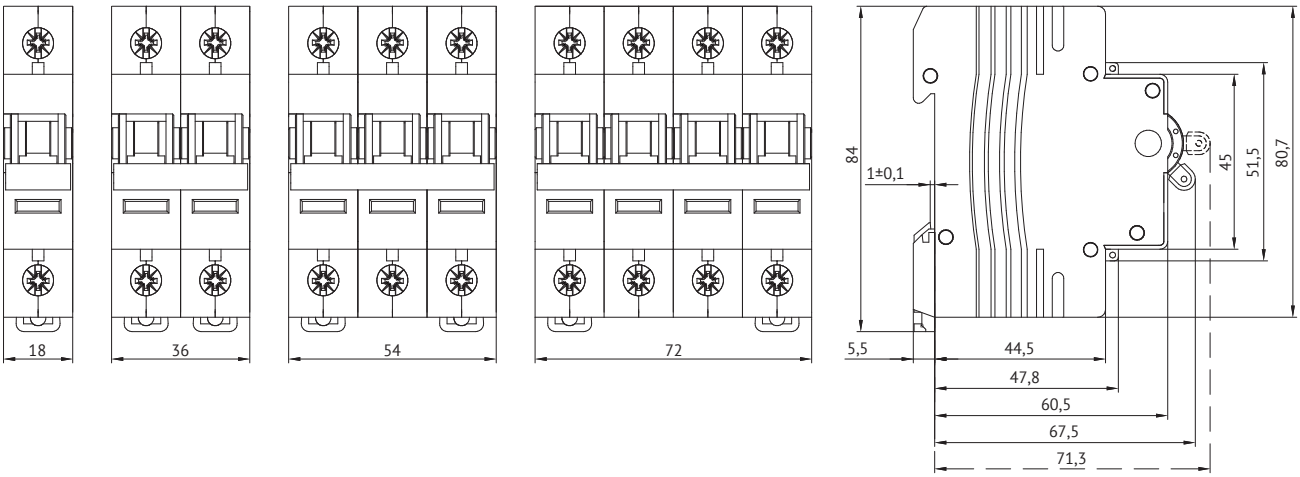

OptiDin BM63P

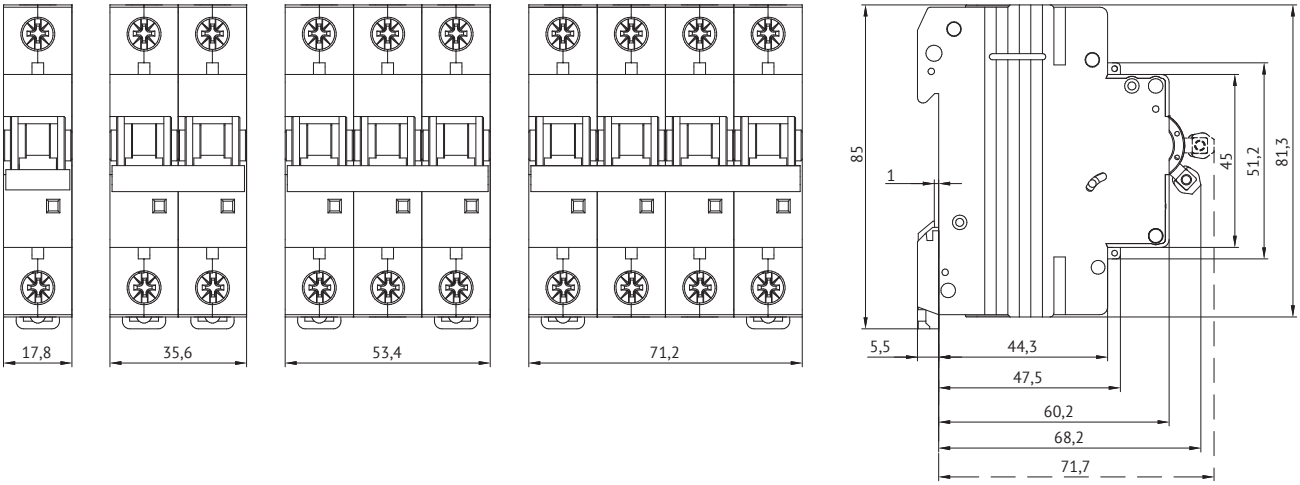

OptiDin

↗ Residual current devices

Residual current devices are switching devices, the main purpose of which is to protect a person from electric shock in case of accidental, unintentional contact with current-carrying parts of electrical installations in case of electrical equipment malfunctions; prevention of fires caused by the flow of leakage currents and ground faults.

Currently, KEAZ product range includes a wide selection of residual current operated circuit breakers with integral overcurrent protection (RCBOs) and residual current operated circuit breakers without integral overcurrent protection (RCCB) for various rated currents and residual current setpoints; selective versions with a trip time delay are available for RCBOs.

OptiDin D63 and OptiDin VD63 RCBOs comply with the requirements of GOST IEC 61009-1, TR TS 004/2011, TR TS 020/2011, EAEU TR 037/2016; OptiDin DM63 RCCB comply with the requirements of GOST IEC 61008-1, TR TS 004/2011, EAEU TR 037/2016.

A wide range of accessories makes the use of KEAZ residual current circuit breakers a convenient choice for any solution.

Designation

OptiDin VD63 - 2 2 C 16 - A - UHL4

(1) (2) (3) (4) (5) (6) (7) (8)

1	Series	OptiDin		
2	Type of RCBO or RCCB (RCD)	DM63	D63	VD63
3	Number of poles	2, 4	2	2, 4
4	Rated residual operating current value, A	0,01; 0,03; 0,1; 0,3	0,01; 0,03; 0,1; 0,3	0,01; 0,03; 0,1; 0,3
5	Electromagnetic tripping device activation characteristic	-	C	
6	Rated current value, A	25, 40, 63, 80, 100	6, 10, 16, 20, 25, 32, 40	6, 10, 16, 20, 25, 32, 40, 50, 63
7	Residual current operating characteristic type designation	A, AC	A, AC	A, AS
8	Climatic version	UHL4 (international TC4); U3 (international T)		

Selection guide

	RCCB (without overcurrent protection)		RCBO (with overcurrent protection)				
Type	OptiDin DM63 4,5 kA	OptiDin DM63	OptiDin D63 4,5 kA	OptiDin D63	OptiDin D63 6 kA	OptiDin VD63	
Appearance							
Standards	GOST IEC 61008-1		GOST IEC 61009-1	GOST IEC 61009-1	GOST IEC 61009-1	GOST IEC 61009-1	
Number of poles	2P, 4P		2P	2P	2P	2P	4P
Electrical specifications							
Protective characteristic type	-		C	C	C	B, C, D	
Rated current In, A	25, 40, 63	25, 40, 63, 80, 100	6, 10, 16, 20, 25, 32, 40			10, 16, 20, 25, 32, 40, 50, 63	
Rated residual operating current IΔn, A	0,01; 0,03; 0,1; 0,3		0,03; 0,1	0,01; 0,03; 0,1; 0,3		0,01; 0,03; 0,1*; 0,3*	
Rated residual non-triggering current IΔn, A	0,5		0,5	0,5	0,5	0,5	
Rated operating voltage in 50 Hz AC circuit Ue, V	230		230	230	230	230	400
Protective characteristic type (according to the operating conditions in presence of the DC component)	A, AC		AC	A	A	A	
Rated maximum making capacity Icn, A	-		4500	6000	6000	6000	
Rated short-circuit residual current making and breaking capacity Icn, A	-		3000	1500	1500	3000	
Rated conditional short-circuit current (Inc), A	4500	6000	-	-	-	-	
Rated conditional residual short-circuit current (Inc), A	4500	6000	-	-	-	-	
Tripping time at double value of rated residual tripping current, max., s	-		-	-	-	0,04	0,2
Other specifications							
Availability of customized version	-		-	-	-	yes	yes
Fault trip indication	yes		yes	yes	yes	yes	yes
Switch IP rating	IP20		IP20	IP20	IP20	IP20	IP20
Accessories	-		-	-	page 23-25		

* Customized versions are available for 100 mA and 300 mA residual currents.

WARNING!!! Snap-on accessories can be attached only to the line of OptiDin BM63 6 kA...25 kA miniature circuit breakers, the line of OptiDin VD63, OptiDin D63 6 kA residual current protection devices, load breakers OptiDin BM63P and current limiters OptiDin BM63-OT.

OptiDin DM63 4,5 kA Electromechanical residual current circuit breakers (RCCB) for currents up to 63 A

The residual current devices (RCCB) are designed for use in one- and three-phase 50/60 Hz AC systems with a solidly grounded neutral with a rated voltage not exceeding 400 V and a rated current up to 63 A to protect people from electric shock in case of electrical equipment malfunctions or in case of unintentional contact with exposed conductive parts of electrical installations, as well as to prevent ignition and fires resulting from the flow of leakage currents and ground faults and operational switching on and off of these circuits. OptiDin DM63 is an electromechanical device that does not have its own power consumption, remains operational in case of any fluctuations and even in case of critically low voltage.

Complies with the requirements of GOST IEC 61008-1, TR TS 004/2011, EAEU TR 037/2016.

Series advantages

Protection against leakage current types AC and A allows for an optimal level of household safety.

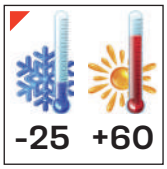

The RCB operates in all systems with a solidly grounded neutral within a wide temperature range from -25 to +60 °C.

The high quality and affordable price of the OptiDin 4.5 kA RCB allows assembling a high-reliability, budget-friendly switchboard.

The barcode and the part number allow to quickly identify the device and sell it in retail trade networks, as well as on online trading platforms.

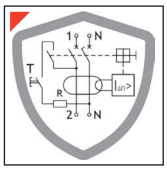

Functionally independent of the mains voltage, the RCCB is distinguished by a high level of reliability in emergency situations, including a break in the neutral conductor.

The QR code allows to quickly get detailed information and technical advice about the product, full technical specifications, and related documentation on the official website.

The status indicator independent of the handle allows to identify the circuit condition and speeds up safe maintenance of the switchboard.

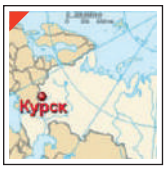

Domestic production allows the use of OptiDin DM63 RCCB in projects with requirements for import substitution.

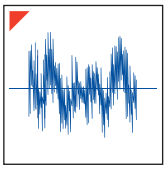

Increased noise immunity guarantees absence of false alarms. This allows to place a RCCB, a smart home system and/or a Wi-Fi router in one home electrical panel.

The entire OptiDin line with LSC of 4.5 kA, including new RCCB, is kept in stock at KEAZ warehouses, which ensures prompt delivery to sites.

Possibility of connecting conductors of various sections from 1 to 35 mm² provides convenient installation.

Reliability and durability, confirmed by a 5-year guarantee and a service life of at least 15 years.

Items

Number of poles		2P			4P		
Circuit diagrams		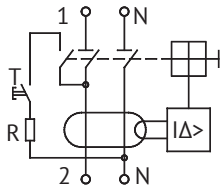			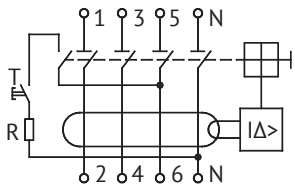		
Operating characteristic type	Rated residual tripping current	25	40	63	25	40	63
AC	0,01	343882	-	-	-	-	-
AC	0,03	343888	343889	343890	343891	343892	343893
AC	0,1	-	343895	343896	-	343898	343899
AC	0,3	343900	343901	343902	343903	343904	343905
A	0,03	343912	343913	-	343915	343916	-

Technical specification

Basic specifications		
Operating voltage, V	2P	230
	4P	230/400
Operating characteristic type (according to the operating conditions in presence of the DC component)		AC, A
Rated conditional short-circuit current		4500
Additional specifications		
IP rating		IP20
Wear resistance	Switching	5000
	Mechanical	10000
Operating temperature range, °C		-25 to +60
Weight, g		
Number of poles	2	210
	4	360

Connection

Rated current In, A	Tightening ptorque, N/m	Without preparation of current conductor core, mm²		With preparation of the conductor current carrying wire, mm²	
		Copper conductors	Aluminum conductors	Copper conductors	Aluminum conductors
25–63	3,5±0,4	1–25	1–25	25–35	25–35

Overall dimensions (mm)

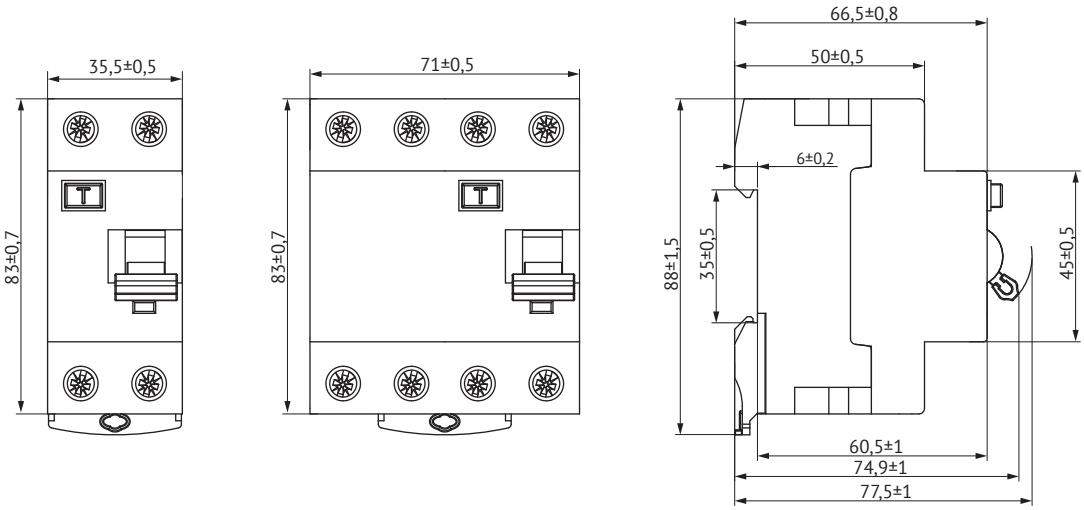

OptiDin DM63 6 kA Residual current circuit breakers up to 100 A

OptiDin DM63 RCCB is designed for use in 50 Hz AC systems with a solidly grounded neutral with a rated voltage not exceeding 400 V and a rated current up to 100 A to protect people from electric shock in case of electrical equipment malfunctions or in case of unintentional contact with exposed conductive parts of electrical installations, as well as to prevent ignition and fires resulting from the flow of leakage currents and ground faults and operational switching on and off of these circuits.

OptiDin DM63 is an electromechanical device that does not have its own power consumption, remains operational in case of any fluctuations and even the absence of mains voltage. Complies with the requirements of GOST IEC 61008-1, TR TS 004/2011, EAEU TR 037/2016.

Series advantages

The ability to organize protection against all types of leakage currents — AC, DC, pulsating, due to the availability of AC and A versions.

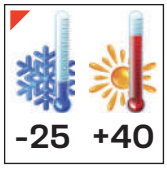

Steady performance at -25 to +40 °C.

The use of a factory seal is a confirmation of the mechanical integrity of the device.

Possibility of connecting conductors of various sections from 1 to 35 mm² ensures convenience of installation.

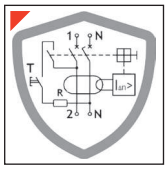

The circuit and mechanical diagram of the RCCB provides reliable protection and guards human life and property from fire even in emergency situations when the neutral conductor breaks.

The status indicator independent of the handle allows to identify the circuit condition and speeds up safe maintenance of the switchboard.

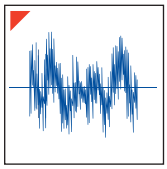

Increased noise immunity guarantees absence of false alarms. This allows to place a RCCB, a smart home system and/or a Wi-Fi router in one home electrical panel.

Reliability and durability, confirmed by a 5-year guarantee and a service life of at least 15 years.

Items

Number of poles		2P					4P				
Circuit diagrams		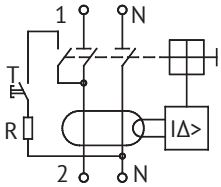					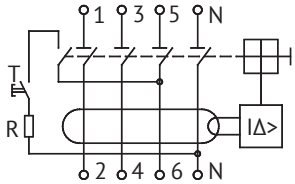				
Operating characteristic type	Rated residual tripping current	25	40	63	80	100	25	40	63	80	100
AC	0,01	254165	254175	254185	254190	254195	254200	254210	254220	254225	254230
AC	0,03	254166	254176	254186	254191	254196	254201	254211	254221	254226	254231
AC	0,1	254167	254177	254187	254192	254197	254202	254212	254222	254227	254232
AC	0,3	254168	254178	254188	254193	254198	254203	254213	254223	254228	254233
A	0,01	254265	254275	254285	254290	254295	254300	254310	254320	254325	254330
A	0,03	254266	254276	254286	254291	254296	254301	254311	254321	254326	254331
A	0,1	254267	254277	254287	254292	254297	254302	254312	254322	254327	254332
A	0,3	254268	254278	254288	254293	254298	254303	254313	254323	254328	254333

Technical specification

Basic specifications		
Operating voltage, V		230/400
Operating characteristic type (according to the operating conditions in presence of the DC component)		AC, A
Rated conditional short-circuit current		6000
Additional specifications		
IP rating		IP20
Wear resistance	Switching	6000
	Mechanical	20000
Operating temperature range, °C		-25 to +40
Weight, g		
Number of poles	2	210
	4	360

Connection

Rated current, A	Tightening ptorque, N/m	Without preparation of current conductor core, mm²		With preparation of the conductor current carrying wire, mm²	
		Copper conductors	Aluminum conductors	Copper conductors	Aluminum conductors
25–100	2	1,5–35	2,5–35	35	35

Overall dimensions (mm)

25-100 A

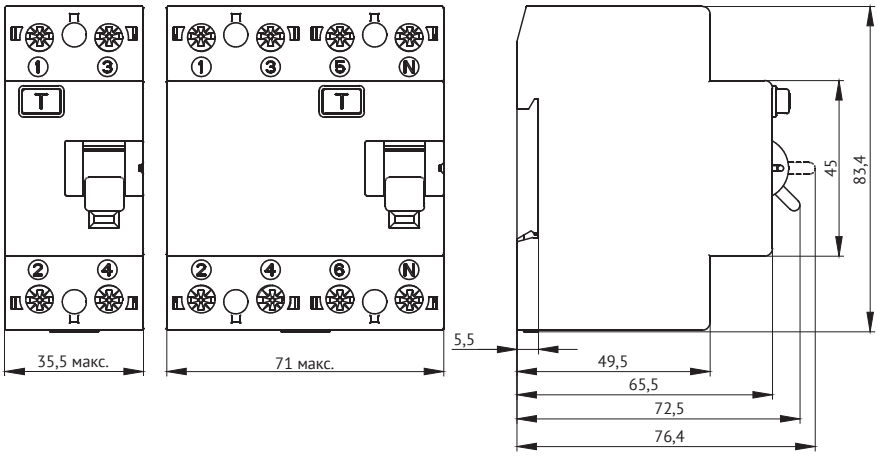

OptiDin MD-L Motor drive

The motor drive provides:
- remote electric control (closing and opening) of type OptiDin DM63 residual current circuit breakers (RCCBs);
- RCCB resetting after tripping;
- manual operation of RCCB with a lever.

2 operation options after opening:
- possibility of remote resetting of the residual current circuit breaker and/or automatic resetting of the RCCB after tripping (the number and frequency of automatic recloses are configured on the device);
- prohibition of remote resetting and automatic resetting after tripping.

Device interfaces provide:
- RCCB status indication using built-in status contacts (1NO+1NC);
- configuration of the number of RCCB recloses when tripping: 0-1-3-5-7;
- configuration of the frequency of recloses, s: 10-30-60-120-180;
- remote device control.

Attention: the OptiDin MD-L motor drive is supplied complete with type OptiDin DM63 RCCB.

Designation

OptiDin MD-L - UHL4

(1) (2)

1	Series	OptiDin MD-L
2	Climatic version	UHL4 (international TC4)

OptiDin MD-L + OptiDin DM63 - 2 2 25 - A - UHL4

(1) (2) (3) (4) (5) (6) (7)

1	Motor drive series	OptiDin MD-L
2	RCCB series	OptiDin DM63
3	Number of RSSB poles	2, 4
4	Rated residual operating current value, A	1 — 0,01; 2 — 0,03; 3 — 0,1; 4 — 0,3
5	Rated current value, A	25, 40, 63, 80, 100
6	Designation of residual current operating characteristic type	A, AC
7	Climatic version	UHL4 (international TC4) ; U3 (international T)

Items

Number of poles		2P					4P				
Circuit diagrams		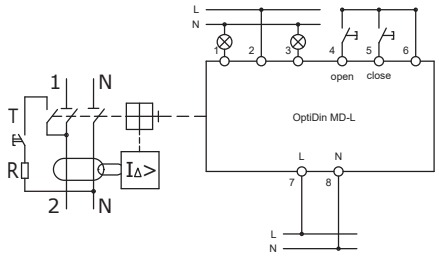					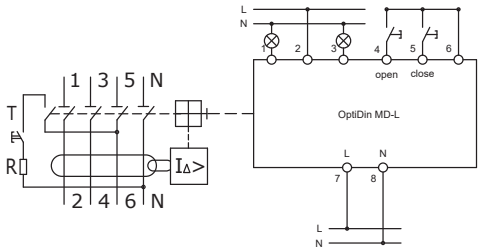				
Operating characteristic type	Rated residual tripping current	25	40	63	80	100	25	40	63	80	100
AC	0,01	on request									
AC	0,03	361852	361841	361843	on request		361845	361847	361849	on request	
AC	0,1	on request									
AC	0,3	on request									
A	0,01	on request									
A	0,03	361842	on request	361844	on request						
A	0,1	on request									
A	0,3	on request						361846	361848	on request	

Technical specification

Parameter	Value
Current type	AC
Current frequency, Hz	50/60
Rated operating voltage, V	230
Rated insulation voltage, V	230
Electric insulation strength, V	2000
Mechanical wear resistance, cycles	6000
Rated impulse withstand voltage (Uimp), kV	4
Power consumption in standby mode, V·A	1,5
Power consumption in close/open mode, max, V·A	2
Protection class as per GOST 14254-2015	IP20
Cross-section of wire connected to terminal clamps, mm^2	0,5 – 2,5
Tightening torque of lead wires fastening screws, N·m	0,4±0,1
MD weight, kg	0,246
Climatic category and placement category as per GOST 15150-69	UHL4
Integrated contacts, number of contacts	1NO+1NC
Current type of auxiliary contacts	AC
Current frequency of auxiliary contacts, Hz	50/60
Rated current of auxiliary contacts, A	1
Rated voltage of auxiliary contacts, V	230
Operation mode	continuous

Controls

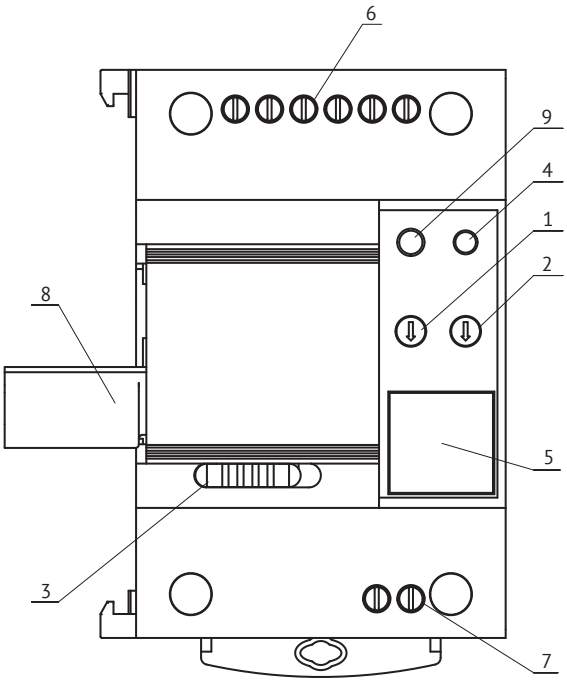

1 — repetition switch;
2 — repetition time switch;
3 — closing switch;
4 — operating status indicator;
5 — indicator of actual RCCB trippings;
6 — terminals for connection of alarm, remote closing and opening;
7 — terminals to connect MD power supply;
8 — activation/deactivation handle,
9 — reset button.

Device status indication

LED color (4)	Status	Description
Green	Always on	MD operating in normal mode
Red	Always on	MD inactive
	Rare blinking (1 s on, 1 s off)	Activation in progress

Device control

Switch	Position	Description
Repetition switch (1)	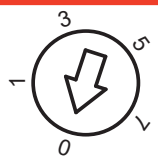	Number of recloses 0
	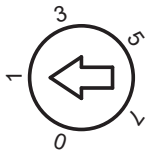	Number of recloses 1
	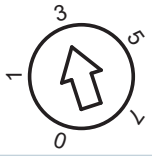	Number of recloses 3
	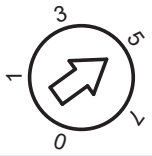	Number of recloses 5
	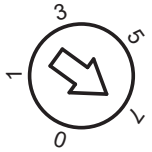	Number of recloses 7
Repetition time switch (2)	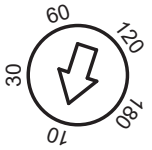	Time between recloses 10 seconds
	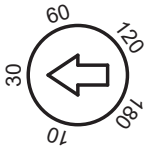	Time between recloses 30 seconds
	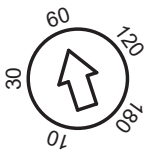	Time between recloses 60 seconds
	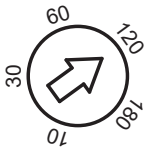	Time between recloses 120 seconds
	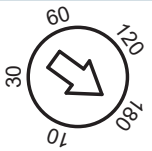	Time between recloses 180 seconds
Closing switch (3)	O	Deactivation of remote access, deactivation of recloses
	I	Activation of remote access, activation of recloses
Reset button (9)	-	Long pressing (3 s) results in zeroing of the number of recloses on RCCB tripping. The number of recloses is displayed on the digital indicator (5).

Overall dimensions (mm)

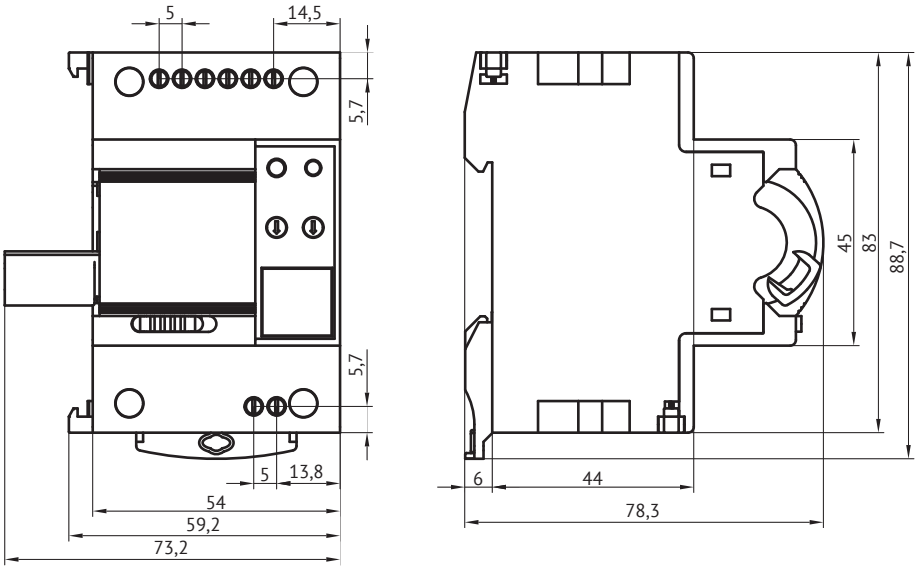

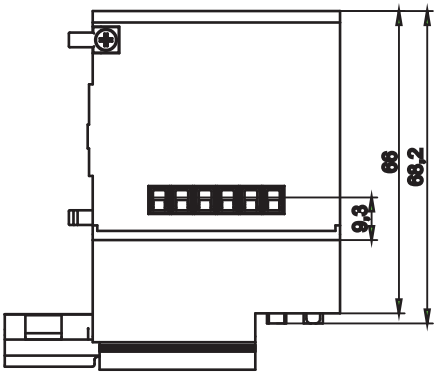

Circuit diagrams

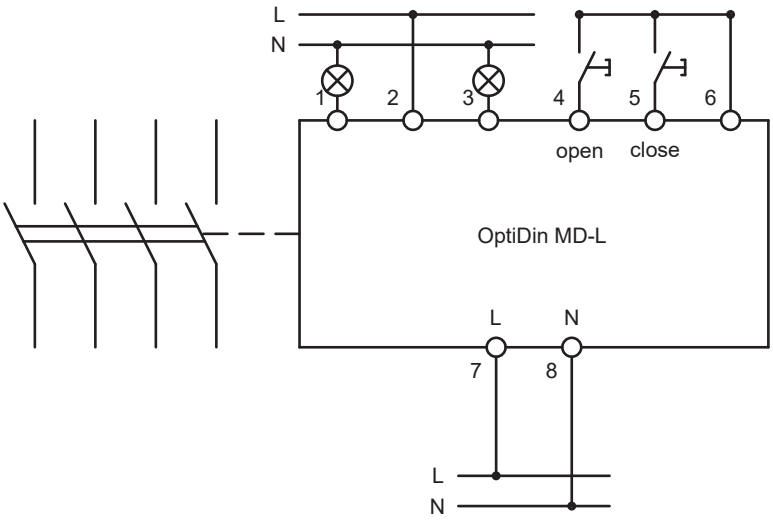

OptiDin D63 4,5 kA Residual current circuit breakers with overcurrent protection up to 40 A

OptiDin D63 residual current operated circuit breakers with integral overcurrent protection (RCBO) are designed for use in single-phase 50 Hz AC circuits with a solidly grounded neutral with a rated voltage not exceeding 230 V and rated currents up to 40 A, to protect people from electric shock in case of electrical equipment malfunctions or unintentional contact with exposed conductive parts of electrical installations, as well as to prevent ignition and fires resulting from the flow of leakage currents and ground faults, to protect against overcurrent and short circuits and operational switching on and off of the specified circuits.

The RCBOs comply with the requirements of GOST IEC 61009-1, TR TS 004/2011, TR TS 020/2011, TR EAEU 037/2016.

Series advantages

Contact position indication

Provides three types of protection

Increased noise immunity prevents false triggering of the device.

Can be installed in locations with high humidity and sudden temperature changes due to the varnished electronic board.

Switchboard space saving — 36 mm. RCBO does not require additional CB.

Suitable for conductors up to 25 mm²

Possibility of installation as input device due to high value of limiting switching capacity (LSC) — 4.5 kA.

The QR code allows to quickly get information about the product, full technical specifications, and related documentation on the official website.

The barcode provides quick identification of the device for sales in retail trade networks, as well as on online trading platforms.

Items

OptiDin D63 RCBO							
Number of poles	1P+N						
Circuit diagrams	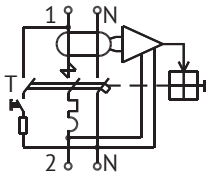						
Rated residual current IΔn, A	Rated current In, A						
	6	10	16	20	25	32	40
0,03	328103	328097	328098	328099	328100	328101	328102
0,1	328110	328104	328105	328106	328107	328108	328109

Connection

Rated current In, A	Tightening ptorque, N/m	Without preparation of current conductor core, mm²			With preparation of the conductor current carrying wire, mm²	
		Flexible copper (multicore)	Rigid copper (multicore and singlecore)	Aluminum (multicore and singlecore)	Flexible copper multicore	Flexible and rigid aluminum
6–63	2	1–10	1–16	1–10	25	16, 25

Technical specification

Parameter	Value
Number of poles	double-pole with one overcurrent protected pole
Rated operating voltage Ue, V	230
Rated insulation voltage Ui, V	230
Rated impulse withstand voltage (Uimp), kV	4
Rated frequency, Hz	50
Rated operating current In, A	6; 10; 16; 20; 25; 32; 40
Protective characteristic type	C
Rated residual tripping current IΔn, A	0,03; 0,1
Rated residual non-tripping current IΔn, A	0,5 IΔn
Rated short-circuit breaking capacity Icn, A	4500
Rated residual making and breaking capacity IΔm, A	3000
Operating characteristic in case of residual current with DC component, type	AC
Mechanical wear resistance, cycles	6000
Switching wear resistance, cycles	4000
Protection class as per GOST 14254	IP20
Cross-section of wire connected to lead terminals, mm²	1÷25
Average service life of RCBO, years	15
Silver content, g	0,119
Climatic category and placement category as per GOST 15150	U3
Operating mode	continuous
No-load power consumption (VA)	max 0,7
Weight of RCBO, kg	0,19
Note: IΔn — determines the effective value of the alternating current at the rated frequency.	

Overall dimensions (mm)

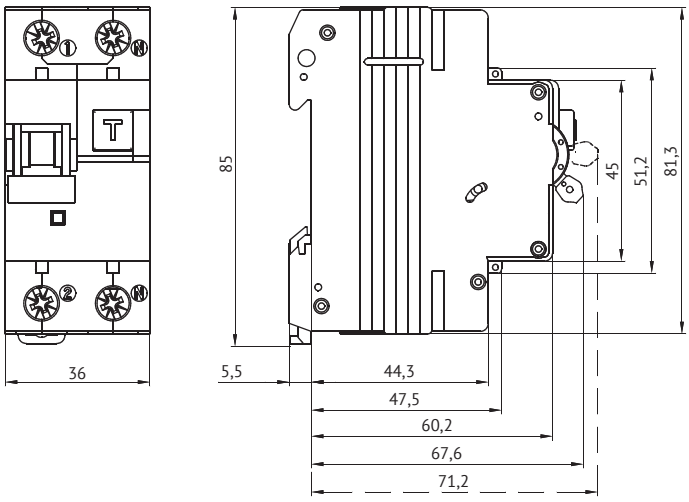

OptiDin D63 Residual current circuit breakers with overcurrent protection up to 40 A with no connections for accessories

OptiDin D63 double-pole residual current operated circuit breakers with integral overcurrent protection (hereinafter referred to as RCBOs) shall be installed in single-phase 50 Hz AC systems with a solidly grounded neutral with a rated voltage not exceeding 230 V and rated currents up to 40 A. They are designed to protect people from electric shock in case of electrical equipment malfunctions or unintentional contact with exposed conductive parts of electrical installations, to prevent ignition and fires resulting from the flow of leakage currents and ground faults, as well as to protect against overcurrent and short circuit.

Double-pole circuit breakers of electronic type with one overcurrent protected pole belong to the class of devices that are functionally dependent on the mains voltage (not opening automatically in the event of a power failure) and are designed for fixed installation with fixed wiring.

The RCBOs comply with the requirements of GOST IEC 61009-1, TR TS 004/2011, TR TS 020/2011 and are manufactured as per TS3422-046-05758109-2008.

Series advantages

Contact position indication

Provides three protection types

Increased noise immunity prevents false triggering of the device.

Can be installed in locations with high humidity and sudden temperature changes due to the varnished electronic board.

Switchboard space saving — 36 mm. RCBO does not require additional CB.

Suitable for conductors up to 25 mm^2

Can be installed as an input device due to high value of limiting switching capacity (LSC) — 6 kA.

Items

OptiDin D63 RCBO							
Number of poles	1P+N						
Circuit diagrams	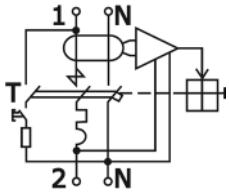						
Rated residual current IΔn, A	Rated current In, A						
	6	10	16	20	25	32	40
0,01	103498	103499	103500	103501	103502	103503	103504
0,03	103505	103506	103507	103508	103509	103510	103511
0,1	103522	103523	103512	103513	103514	103515	103516
0,3	103524	103525	103517	103518	103519	103520	103521

Connection

Rated current, A	Tightening ptorque, N/m	Without preparation of current conductor core, mm²			With preparation of the conductor current carrying wire, mm²		
		Flexible copper (multicore)	Rigid copper (multicore and single-core)	Aluminum (multicore and single-core)	Flexible copper (multicore)	Flexible aluminum	Rigid aluminum
6–40	2	1,5–10	1,5–16	2,5–10	25	16	25

Technical specification

Basic specifications		
Insulation voltage, V		400
Application category		A
Energy limiting class		3
Additional specifications		
IP rating		IP20
Wear resistance	Switching	4000
	Mechanical	6000
Operating temperature range, °C		-40 to +55
Storage temperature range, °C		-45 to +55
Weight, g		
Number of poles	1P+N	190

Overall dimensions (mm)

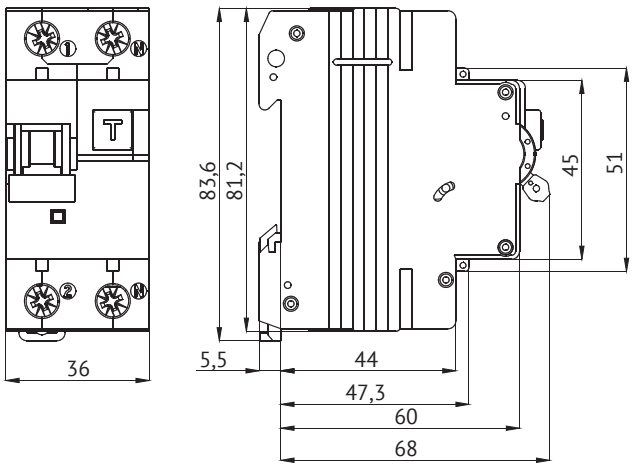

OptiDin D63 6 kA Residual current circuit breakers with overcurrent protection up to 40 A

OptiDin D63 double-pole residual current operated circuit breakers with integral overcurrent protection (hereinafter referred to as RCBOs) shall be installed in single-phase 50 Hz AC systems with a solidly grounded neutral with a rated voltage not exceeding 230 V and rated currents up to 40 A. They are designed to protect people from electric shock in case of electrical equipment malfunctions or unintentional contact with exposed conductive parts of electrical installations, to prevent ignition and fires resulting from the flow of leakage currents and ground faults, as well as to protect against overcurrent and short circuit.

Double-pole circuit breakers of electronic type with one overcurrent protected pole belong to the class of devices that are functionally dependent on the mains voltage (not opening automatically in the event of a power failure) and are designed for fixed installation with fixed wiring.

The RCBOs comply with the requirements of GOST IEC 61009-1, TR TS 004/2011, TR TS 020/2011 and are manufactured as per TU 3422-046-05758109-2008.

A wide range of accessories makes the use of KEAZ OptiDin RCBOs a convenient choice for any solution.

Series advantages

Contact position indication

Provides three types of protection

Increased noise immunity prevents false triggering of the device.

Can be installed in locations with high humidity and sudden temperature changes due to the varnished electronic board.

Switchboard space saving — 36 mm. RCBO does not require additional CB.

Suitable for conductors up to 25 mm²

Can be installed as an input device due to high value of limiting switching capacity (LSC) — 6 kA.

Accessories snap on to the left side of the circuit breaker, ensuring a fast, secure connection with high precision in one click.

Items

OptiDin D63 RCBO							
Number of poles	1P+N						
Circuit diagram	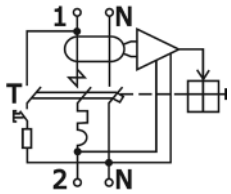						
Rated residual current IΔn, A	Rated current In, A						
	6	10	16	20	25	32	40
0,01	333140	333124	333134	333136	333137	333138	333139
0,03	333147	333141	333142	333143	333144	333145	333146
0,1	333154	333148	333149	333150	333151	333152	333153
0,3	333161	333155	333156	333157	333158	333159	333160
Accessories	page 24-26						

Connection

Rated current, A	Tightening ptorque, N/m	Without preparation of current conductor core, mm²			With preparation of the conductor current carrying wire, mm²		
		Flexible copper (multicore)	Rigid copper (multicore and single-core)	Aluminum (multicore and single-core)	Flexible copper (multicore)	Flexible aluminum	Rigid aluminum
6–40	2	1,5–10	1,5–16	2,5–10	25	16	25

Technical specification

Basic specifications		
Insulation voltage, V		400
Application category		A
Energy limiting class		3
Additional specifications		
IP rating		IP20
Wear resistance	Switching	4000
	Mechanical	6000
Operating temperature range, °C		-40 to +55
Storage temperature range, °C		-45 to +55
Weight, g		
Number of poles	1P+N	190

Overall dimensions (mm)

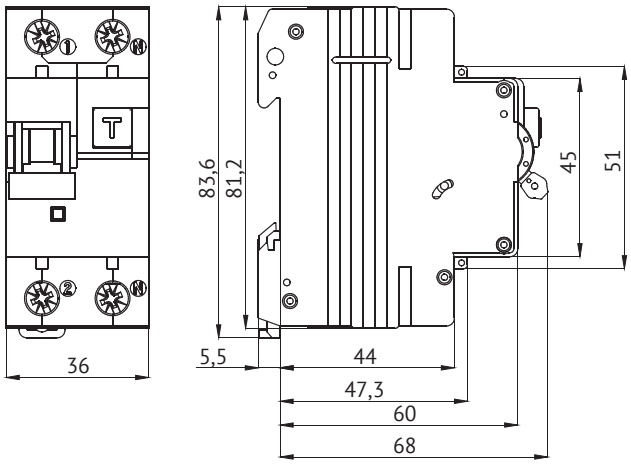

Accessories suitable for OptiDin D63 6kA

Snap-on accessories for miniature circuit breakers	
Code	Name
249158	OptiDin BM63-MSSK 2
249189	OptiDin BM63-MSK 1
249197	OptiDin BM63-MSK 2
249184	OptiDin BM63-NR230
249177	OptiDin BM63-NR24
333065	OptiDin BM63-RMMN

WARNING!!! Snap-on accessories can be attached only to the line of OptiDin BM63 6 kA...25 kA miniature circuit breakers, the line of OptiDin VD63, OptiDin D63 6 kA residual current protection devices, load breakers OptiDin BM63P and current limiters OptiDin BM63-OT.

OptiDin VD63 Residual current circuit breakers with overcurrent protection up to 63 A

OptiDin VD63 residual current operated circuit breakers with integral overcurrent protection (hereinafter referred to as RCBO) are installed in 50 Hz AC circuits with a solidly grounded neutral with a rated voltage not exceeding 400 V and rated currents up to 63 A. They are designed to protect people from electric shock in case of electrical equipment malfunctions or unintentional contact with exposed conductive parts of electrical installations, to prevent ignition and fires resulting from the flow of leakage currents and ground faults, as well as to protect against overcurrent and short circuit. RCBOs belong to a class of devices that are functionally dependent on the mains voltage (not opening automatically in the event of a power failure). Double-pole RCBOs are designed for fixed installation with fixed wiring in normal and harsh operating conditions as per GOST 30345.0-95 in single-phase, and four-pole RCBOs — in threephase systems.

The RCBOs comply with the requirements of GOST IEC 61009-1, TR TS 004/2011, TR TS 020/2011 and are manufactured as per TS3422-046-05758109-2008.

Series advantages

Provides three types of protection

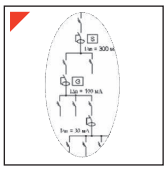

Possibility of building cascade protection of circuits due to the presence in the line of customized RCBOs of «S» type.

Trip cause indication — leakage currents/short circuit or overcurrent.

Suitable for conductors up to 25 mm^2

Increased noise immunity prevents false triggering of the device.

Can be installed as an input device due to high value of limiting switching capacity (LSC) — 6 kA.

Protection against turning on the circuit that has a lifethreatening leakage current in it.

Accessories snap on to the left side of the circuit breaker, ensuring a fast, secure connection with high precision in one click.

Items

OptiDin VD63 RCBO																		
Circuit diagrams		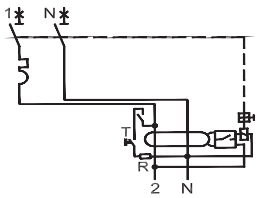								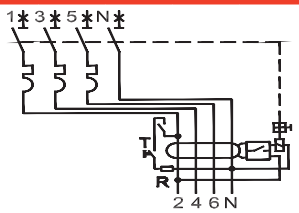								
Protective characteristic type	Number of poles	1P+N								3P+N								
	Rated residual current IΔn, A	Rated current In, A																
		10	16	20	25	32	40	50	63	6	10	16	20	25	32	40	50	63
B	0,01	338285	338286	338287	338288						338312	338313	338314	338315				
	0,03	338289	338290	338291	338292	338293	338294	338295	338296	338324	338316	338317	338318	338319	338320	338321	338322	338323
	0,1	338297	338298	338299	338301 338300*	338302	338303	338305 338304*	338306		338325	338326	338327	338329 338328*	338331 338330*	338332	338333	338334
	0,3				338307	338308	338309	338310	338311		145736			338335	338337 338336*	338338	338339	338341 338340*
C	0,01	103448	103449	103450	103451						103471	103472	103473	103474				
	0,03	103452	103453	103454	103455	103456	103457	103458	103459	228261	103475	103476	103477	103478	103479	103480	103481	103482
	0,1	103460	103461	103462	103463 218721*	103495	103496	103464 222722*	103465		103483	103484	103485	103486 236719*	103487 274847*	103488	103489	103490
	0,3				103466	103467	103468	103469	103470					103491	103492 236721*	103493	103497	103494 250090*
D	0,01	338342	338343	338344	338345						338369	338370	338371	338372				
	0,03	338346	338347	338348	338349	338350	338351	338352	338353	338381	338373	338374	338375	338376	338377	338378	338379	338380
	0,1	338354	338355	338356	338358 338357*	338359	338360	338362 338361*	338363		338382	338383	338384	338386 338385*	338388 338387*	338389	338390	338391
	0,3				338364	338365	338366	338367	338368					338392	338394 338393*	338395	338396	338398 338397*
Accessories		page 23-25																

* selective design

WARNING!!! Snap-on accessories can be attached only to the line of OptiDin BM63 6 kA...25 kA miniature circuit breakers, the line of OptiDin VD63, OptiDin D63 6 kA residual current protection devices, load breakers OptiDin BM63P and current limiters OptiDin BM63-OT.

Technical specification

Basic specifications			
Application category		A	
Energy limiting class		3	
Additional specifications			
IP rating		IP20	
Wear resistance	Switching	4000	
	Mechanical	6000	
Operating temperature range, °C		-25 to +55	
Storage temperature range, °C		-45 to +55	
Weight, g			
Number of poles		1P+N	0,39
		3P+N	0,72

Connection

Rated current, A	Tightening ptorque, N/m	Without preparation of current conductor core, mm²			With preparation of the conductor current carrying wire, mm²		
		Flexible copper (multicore)	Rigid copper multi-core and single-core)	Aluminum multi-core and single-core)	Flexible copper (multicore)	Flexible aluminum	Rigid aluminum
6–40	2	1,5–10	1,5–16	2,5–10	25	16	25

Overall dimensions (mm)

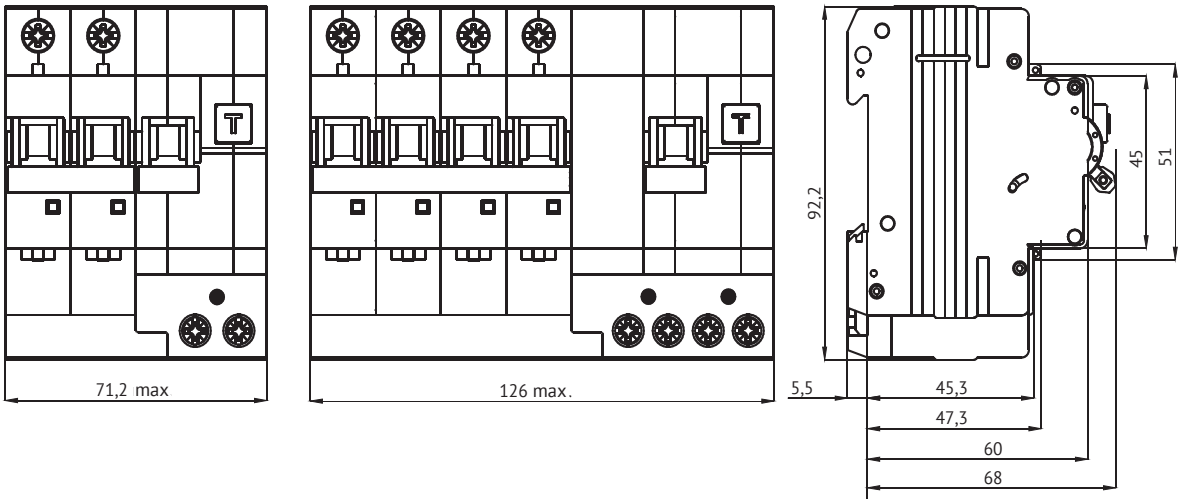

OptiDin

↗ Surge protection devices

The OptiDin OM surge protection devices (surge arresters) are designed to protect against switching and lightning surges.

The OptiDin OM SPDs are installed at the points of entry of electricity in the main switchboard, in secondary switchboards and directly on electrical machines, instruments and equipment.

Designation

OptiDin OM u - I - 1 + N U - 280 / 25 / X R S

(1) (2) (3) (4) (5) (6) (7) (8) (9) (10) (11) (12)

1	Series	OptiDin						
2	Configuration	OM						
3	One-piece configuration	u						
4	Surge protection device type	I			II			
5	Number of poles or neutral pole (letter N) of a single-piece version	1P	1P+N	2P	3P	3P+N	4P	N
6	Presence of pole for neutral conductor	N						
7	Single-piece configuration of pole for neutral conductor	U						
8	Maximum operating voltage (phase), V	260			280			
9	Impulse current (for surge protection device type I) or maximum discharge current (for surge protection device type II), kA	12,5	25	30	40	50	100	
10	Presence of residual current suppression function	X						
11	Presence of remote signaling terminals	R						
12	Presence of wear indicator	S						

Selection guide

Current type	Grounding system type		Number of poles	Product name	Code	Protected conductors
AC, three-phase power supply	TN-S/TT	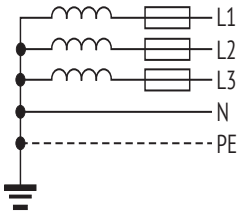	3P+N	OptiDin OM-I-3+Nu-280/12,5	114275	L1, L2, L3, N, PE
			3P+N	OptiDin OM-I-3+Nu-280/12,5/R	114277	
			4P	OptiDin OM-I-4-280/12,5	114243	
			4P	OptiDin OM-I-4-280/12,5/R	114247	
			4P	OptiDin OM-I-4-280/12,5/RS	114263	
			4P	OptiDin OM-I-4-280/12,5/S	114260	
			3P+N	OptiDin OM-II-3+N-280/40	114311	
			3P+N	OptiDin OM-II-3+N-280/40/R	114313	
			4P	OptiDin OM-II-4-280/40	114297	
			4P	OptiDin OM-II-4-280/40/R	114301	
			4P	OptiDin OM-II-4-280/40/RS	114309	
			4P	OptiDin OM-II-4-280/40/S	114307	
			4P	OptiDin OM-II-4-280/40/X	114303	
			4P	OptiDin OM-II-4-280/40/XR	114305	
	TN-C	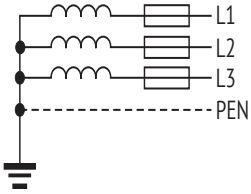	3P	OptiDin OM-I-3-280/12,5	114242	L1, L2, L3, PEN
			3P	OptiDin OM-I-3-280/12,5/R	114246	
			3P	OptiDin OM-I-3-280/12,5/RS	114262	
			3P	OptiDin OM-I-3-280/12,5/S	114258	
			3P	OptiDin OM-II-3-280/40	114296	
			3P	OptiDin OM-II-3-280/40/R	114300	
			3P	OptiDin OM-II-3-280/40/RS	114308	
			3P	OptiDin OM-II-3-280/40/S	114306	
			3P	OptiDin OM-II-3-280/40/X	114302	
			3P	OptiDin OM-II-3-280/40/XR	114304	
AC, single-phase power supply	TN-S/TT	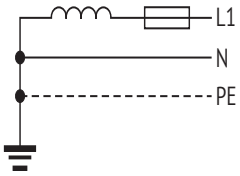	1P+N	OptiDin OM-I-1+N-280/12,5	114251	L1, L2, L3, N, PE
			1P+N	OptiDin OM-I-1+N-280/12,5/R	114252	
			1P+N	OptiDin OM-I-1+Nu-280/12,5	114278	
			1P+N	OptiDin OM-I-1+Nu-280/12,5/R	114279	
			2P	OptiDin OM-I-2-280/12,5	114209	
			2P	OptiDin OM-I-2-280/12,5/R	114245	
			2P	OptiDin OM-I-2-280/12,5/RS	114274	
			2P	OptiDin OM-I-2-280/12,5/S	114272	
			1P+N	OptiDin OM-II-1+N-280/40	114310	
			1P+N	OptiDin OM-II-1+N-280/40/R	114312	
			2P	OptiDin OM-II-2-280/40	114295	
			2P	OptiDin OM-II-2-280/40/R	114299	
			2P	OptiDin OM-II-2-280/40/RS	114440	
			2P	OptiDin OM-II-2-280/40/S	114414	
			2P	OptiDin OM-II-2-280/40/X	114320	
			2P	OptiDin OM-II-2-280/40/XR	114412	

Current type	Grounding system type		Number of poles	Product name	Code	Protected conductors
AC, single-phase power supply	TN-C	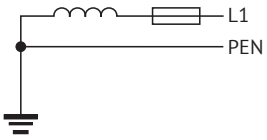	1P	OptiDin OMu-I-1-280/12,5/X	114283	L1, PEN
			1P	OptiDin OMu-I-1-280/12,5/XR	114284	
			1P	OptiDin OMu-I-1-280/25/X	114288	
			1P	OptiDin OMu-I-1-280/25/XR	114291	
			1P	OptiDin OMu-I-1-280/30/X	114292	
			1P	OptiDin OMu-I-N-260/100	114286	
			1P	OptiDin OMu-I-N-260/50	114281	
			1P	OptiDin OM-I-1-280/12,5	114201	
			1P	OptiDin OM-I-1-280/12,5/R	114244	
			1P	OptiDin OM-I-1-280/12,5/RS	114273	
			1P	OptiDin OM-I-1-280/12,5/S	114271	
			1P	OptiDin OM-I-N-260/12,5	114269	
			1P	OptiDin OM-II-1-130/40	149961	
			1P	OptiDin OM-II-1-280/40	114294	
			1P	OptiDin OM-II-1-280/40/R	114298	
			1P	OptiDin OM-II-1-280/40/RS	114439	
			1P	OptiDin OM-II-1-280/40/S	114413	
			1P	OptiDin OM-II-1-280/40/X	114318	
			1P	OptiDin OM-II-1-280/40/XR	114411	
			1P	OptiDin OM-II-1-385/40	227679	
			1P	OptiDin OM-II-1-550/40	147311	
			1P	OptiDin OM-II-1-750/30	147312	
			1P	OptiDin OM-II-N-260/40	114315	

	Surge protection device classification							
	Test class		Surge protection device design			Overvoltage protection method		
	Surge protection device class I+II+III	Surge protection device class II+III	Removable module design	Remote signaling terminal	Wear indicator	Switching voltage CDT	Limiting voltage MOV	Combined type MOV+CDT
	+		+			+	+	
	+		+	+		+	+	
	+		+				+	
	+		+	+			+	
	+		+	+	+		+	
	+		+		+		+	
		+	+			+	+	
		+	+	+		+	+	
		+	+				+	
		+	+	+			+	
		+	+	+	+		+	
		+	+		+		+	
		+	+					+
		+	+	+				+
	+		+				+	
	+		+	+			+	
	+		+	+	+		+	
	+		+		+		+	
		+	+				+	
		+	+	+			+	
		+	+	+	+		+	
		+	+		+		+	
		+	+					+
		+	+	+				+
	+		+			+	+	
	+		+	+		+	+	
	+		+			+	+	
	+		+	+		+	+	
	+		+				+	
	+		+	+			+	
	+		+	+	+		+	
	+		+		+		+	
		+	+			+	+	
		+	+	+		+	+	
		+	+				+	
		+	+	+			+	
		+	+	+	+		+	
		+	+		+		+	
		+	+					+
		+	+	+				+

	Surge protection device classification								
	Test class		Surge protection device design				Overvoltage protection method		
	Surge protection device class I+II+III	Surge protection device class II+III	Single-piece design	Removable module design	Remote signaling terminal	Wear indicator	Switching voltage CDT	Limiting voltage MOV	Combined type MOV+CDT
	+		+						+
	+		+		+				+
	+		+						+
	+		+		+				+
	+		+						+
	+		+				+		
	+		+				+		
	+			+				+	
	+			+	+			+	
	+			+	+	+		+	
	+			+		+		+	
	+			+			+		
		+		+				+	
		+		+	+			+	
		+		+	+	+		+	
		+		+		+		+	
		+		+					+
		+		+	+				+
		+		+				+	
		+		+				+	
		+		+	+			+	
		+		+	+	+		+	
		+		+		+		+	
		+		+					+
		+		+	+				+
		+		+				+	
		+		+				+	
		+		+				+	
		+		+			+		

OptiDin OM(u)-I Surge protection devices class I+II+III

The OptiDin OMuI surge protection devices are designed to protect mains and devices from the effects of a surge wave caused by a close, direct or indirect lightning strike. They are designed as a one-piece unit with a varistor and arrester connected in series, which ensures a complete separation of L>N, N>PE, without residual currents.

The OptiDin OMI surge protection devices are designed to equalize potentials in the event of a direct lightning strike. They are installed at the input of external conductors in the main switchboard and contain replaceable pluggable varistors.

The OptiDin OM(u)I surge protection devices are available with or without remote signaling. Mounting on a 35 mm din-rail SPDs comply with the requirements of GOST R 51992.

Series advantages

Informing about the status of protection and the need to replace devices due to the presence of indicator for varistor module wear during operation.

Safety when replacing plug-in modules due to the possibility of installing the module in any position.

Improved current-carrying properties in onepiece versions.

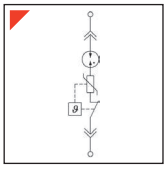

Models with a residual current suppression function eliminate leakage currents, making it possible to install SPDs in front of the electricity meter.

Space is provided for placement of additional information.

Availability of an additional contact for remote signaling allows to remotely monitor the device status.

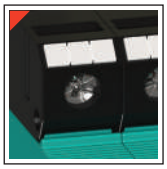

Marked terminals allow to avoid incorrect connection of conductors during installation.

Items

OptiDin OM(u)-I										
Appearance										
Number of poles		1P			N	N	1P	N	1P+N	
Circuit diagrams		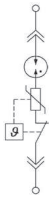	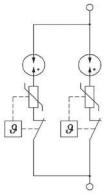			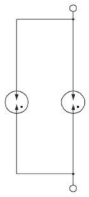	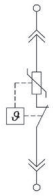	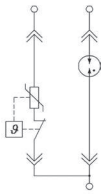	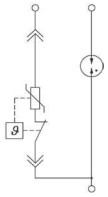	
Rated AC voltage Un, V		230	230	230	230	230	230	230	230	230
Maximum continuous operating voltage Uc, V		280	280	280	280	260	280	260	280/260 N/PE	280/260 N/PE
Impulse current Iimp (10/350), kA		12,5	25	30	50	100	12,5	12,5	12,5	12,5/50 N/PE
Maximum discharge current Imax (8/20), kA		50	60	60	80	100	50	40	50/40 N/PE	50/80 N/PE
Rated discharge current In (8/20), kA		30	40	40	50	100	30	20	30/20 N/PE	30/50 N/PE
Protection voltage level Up, kV		≤1,5	≤1,5	≤1,5	≤1,5	≤1,5	≤1,3	≤1,5	≤1,3/≤1,5 N/PE	≤1,3/≤1,5 N/PE
Response time tA, ns		<100	<100	<100	<100	<100	<25		<25/<100 N/PE	<25/<100 N/PE
Open circuit voltage [T3] UOC, kV		6	6	6		6	20	6	20/6 N/PE	20/10 N/PE
Estimated short-circuit current of power supply Ip, kAef		25	25	25			25		25 L/N	25 L/N
Protective fuse rating gL/gG, A		≤160	≤250	≤315			≤160		≤160 L/N	≤160 L/N
Temporary overvoltage UTOV, V AC		335	335	335			335		335 L/N	335 L/N
Residual current IPE, μA		<1	<1	<1	<1	<1		<1	<1 N/PE	<1 N/PE
Follow current If, A					100	100		100	100 N/PE	100 N/PE
Items										
General design					114281	114286	114201	114269	114251	114278
	With remote alarm contact						114244		114252	114279
With wear indicator							114271			
	With remote alarm contact						114273			
With residual current suppression function		114283	114288	114292						
	With remote alarm contact	114284	114291							

OptiDin OM(u)-I					
Appearance					
Number of poles		2P	3P	3P+N	4P
Circuit diagrams		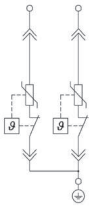	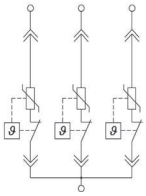	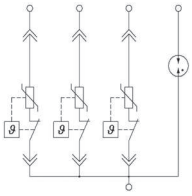	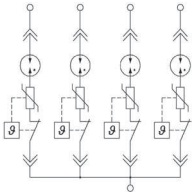
Rated AC voltage Un, V		230	230	230	230
Maximum continuous operating voltage Uc, V		280	280	280	280
Impulse current Iimp (10/350), kA		12,5	12,5	12,5	12,5
Maximum discharge current Imax (8/20), kA		50	50	50/80 N/PE	50
Rated discharge current In (8/20), kA		30	30	30/50 N/PE	30
Protection voltage level Up, kV		≤1,3	≤1,3	≤1,3/≤1,5 N/PE	≤1,3
Response time tA, ns		<25	<25	<25/<100 N/PE	<25
Open circuit voltage [T3] UOC, kV		20	20	20/10 N/PE	20
Estimated short-circuit current of power supply Ip, kAef		25 L/N	25 L/N	25 L/N	25
Protective fuse rating gL/gG, A		≤160 L/N	≤160 L/N	≤160 L/N	≤160
Temporary overvoltage UTOV, V AC		335 L/N	335 L/N	335 L/N	335
Residual current IPE, μA				<1 N/PE	
Follow current If, A				100 N/PE	
Items					
General design		114209	114242	114275	114243
	With remote alarm contact	114245	114246	114277	114247
With wear indicator		114272	114258		114260
	With remote alarm contact	114274	114262		114263

Technical specification

Basic specifications		
Operating frequency, Hz		50/60
Operating voltage, V		230/400
Status indication in models	Green	in operating condition
	Yellow*	partially worn, replacement recommended
	Red	out of order, immediate replacement required
Signaling changeover contact		M3/0,25 N/m, 0,2 ... 1,5 mm², max. 250 V~/1 A
Additional specifications		
Operating temperature range, °C		- 40 to +70
IP rating		IP20
Mounting on profiled din-rail		35 x 7,5 mm
Compliance with regulations	COST R 51992 / IEC 61643-1	Class I + class II + class III
	STN EN 61643-11/A11	Type 1 [T1] + type 2 [T2] + type 3 [T3]
	VDE 0675-06	Class B + class C + class D
Weight, g		
OptiDin OM-I-1		190
OptiDin OM-I-1+N		278
OptiDin OM-I-1+Nu		300
OptiDin OM-I-2		340
OptiDin OM-I-3		490
OptiDin OM-I-3+Nu		550
OptiDin OM-I-4		640
OptiDin OM-I-N		128
OptiDin OMu-I-1-280/12,5		240
OptiDin OMu-I-1-280/25		450
OptiDin OMu-I-1-280/30		450
OptiDin OMu-I-N-260/50		150
OptiDin OMu-I-N-260/100		260

* For models with wear indicator

Connection

Min/max tightening ptorque, N/m	2–3
Cross-section of connecting conductor, mm²: – wire – cable	 4–35 4–35

Plug-in modules

Name	Code
OptiDin OM-I-0-280/12,5	261378
OptiDin OM-I-0-280/12,5/S	261379
OptiDin OM-I-0N-280/12,5	261380

Overall dimensions (mm)

OptiDin OMu-I-1-280/12,5
OptiDin OMu-I-1-260/50

OptiDin OMu-I-1-280/25
OptiDin OMu-I-1-280/30
OptiDin OMu-I-N-260/100

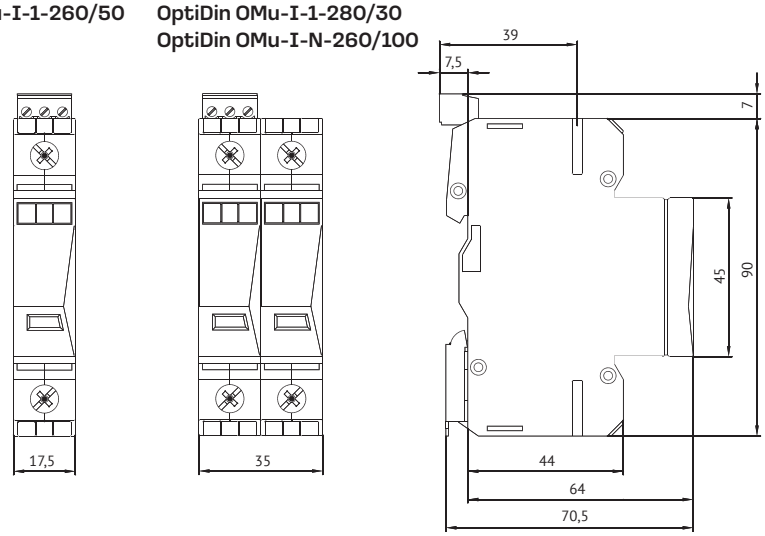

OptiDin OM-I

1P
N

2P
1P+N

3P

4P
3P+N

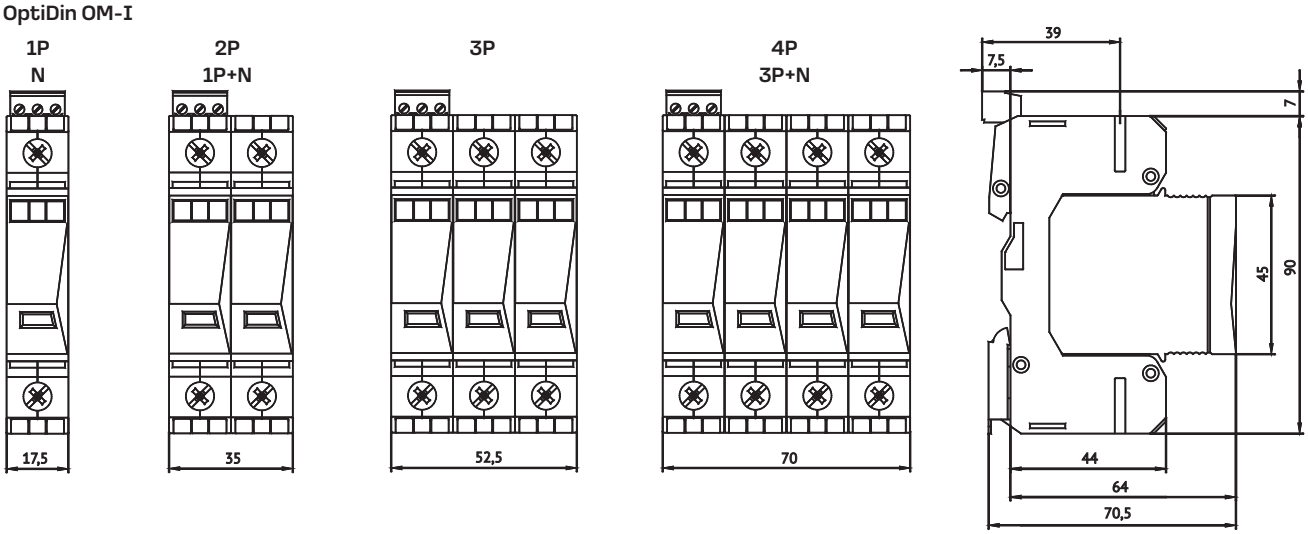

OptiDin OM-II Class II+III surge protection devices

Class II surge protection devices are designed for surge protection category III, for which a maximum overvoltage of 4 kV is established through insulation coordination for 230/400 V networks. These surge protectors serve to dissipate the energy of surge voltages in the electrical distribution network of a facility and are installed mainly, in secondary distribution boards.

OptiDin OMII surge protection devices are designed to dissipate surge energy in power systems of buildings. They are usually installed in secondary switchboards and contain an integrated plug-in varistor. The OptiDin OMII surge protection devices are available with or without remote signaling. Mounting is carried out on a 35 mm din-rail.

SPDs comply with the requirements of GOST R 51992.

Series advantages

Informing about the status of protection and the need to replace devices due to the presence of indicator for varistor module wear during operation.

Safety when replacing plug-in modules due to the possibility of installing the module in any position.

Space is provided for placement of additional information.

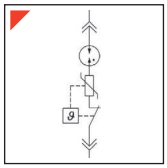

Models with a residual current suppression function eliminate leakage currents, making it possible to install SPDs in front of the electricity meter.

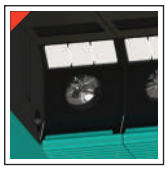

Marked terminals allow to avoid incorrect connection of conductors during installation.

Availability of an additional contact for remote signaling allows to remotely monitor the device status.

Items

OptiDin OM-II										
Appearance											
Number of poles		1P				N	1P+N	2P	3P	3P+N	4P
Circuit diagrams		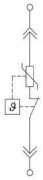					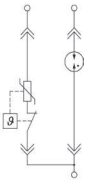	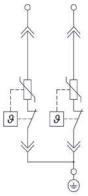	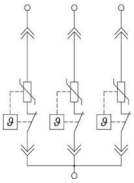	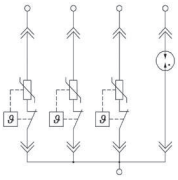	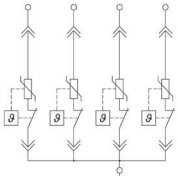
Rated AC voltage Un, V		230	120	385	470	230	230	230	230	230	230
Maximum continuous operating voltage Uc, V		280	130	385	550	260	280/260 N/PE	280	280	280	280
Maximum discharge current Imax (8/20), kA		40				40	40	40	40	40	40
Rated discharge current In (8/20), kA		20				20	20	20	20	20	20
Protection voltage level Up, kV		≤1,45	≤0,85	≤1,8	≤2,65	≤1,45	≤1,45	≤1,45	≤1,45	≤1,45	≤1,45
Response time tA, ns		<25				<150	<25/<150 N/PE	<25	<25	<25/<150 N/PE	<25
Open circuit voltage [T3] UOC, kV		6				6	6	6	6	6	6
Estimated short-circuit current of power supply Ip, kAef		25					25 L/N	25 L/N	25 L/N	25 L/N	25
Protective fuse rating gL/gG, A		≤125					≤125	≤125 L/N	≤125 L/N	≤125 L/N	≤125
Temporary overvoltage UTOV, V AC		335	175	560	685		335 L/N	335 L/N	335 L/N	335 L/N	335
Residual current IPE, μA						<1	<1 N/PE			<1 N/PE	
Follow current If, A						100	100 N/PE			100 N/PE	
Items											
General design		114294	149961	227679	147311	114315	114310	114295	114296	114311	114297
	With remote alarm contact	114298					114312	114299	114300	114313	114301
With wear indicator		114413						114414	114306		114307
	With remote alarm contact	114439						114440	114308		114309
With residual current suppression function		114318						114320	114302		114303
	With remote alarm contact	114411						114412	114304		114305

Connection

Min/max tightening ptorque, N/m	2–3
Cross-section of connecting conductor, mm²: wire cable	 4–35 4–35

Plug-in modules

Name	Code
OptiDin OM-II-0-280/40	261381
OptiDin OM-II-0-280/40/S	261382
OptiDin OM-II-0-280/40/X	261383
OptiDin OM-II-0N-260/40	261384

Technical specification

Basic specifications		
Operating frequency, Hz		50/60
Operating voltage, V		230/400
Status indication in models	Green	in operating condition
	Yellow*	partially worn, replacement recommended
	Red	out of order, immediate replacement required
Signaling changeover contact		M3/0,25 N/m, 0,2 ... 1,5 mm², max. 250 V~/1 A
Additional specifications		
Operating temperature range, °C		от - 40 до +70
IP rating		IP20
Mounting on profiled din-rail		35 x 7,5 mm
Compliance with regulations	COST R 51992 / IEC 61643-1	Class I + class II + class III
	STN EN 61643-11/A11	Type 1 [T1] + type 2 [T2] + type 3 [T3]
	VDE 0675-06	Class B + class C + class D
Weight, g		
OptiDin OM-II-1		145
OptiDin OM-II-1+N		233
OptiDin OM-II-2		255
OptiDin OM-II-3		355
OptiDin OM-II-3+N		443
OptiDin OM-II-4		460
OptiDin OM-II-N		128

* For models with wear indicator

Overall dimensions (mm)

OptiDin OM-II

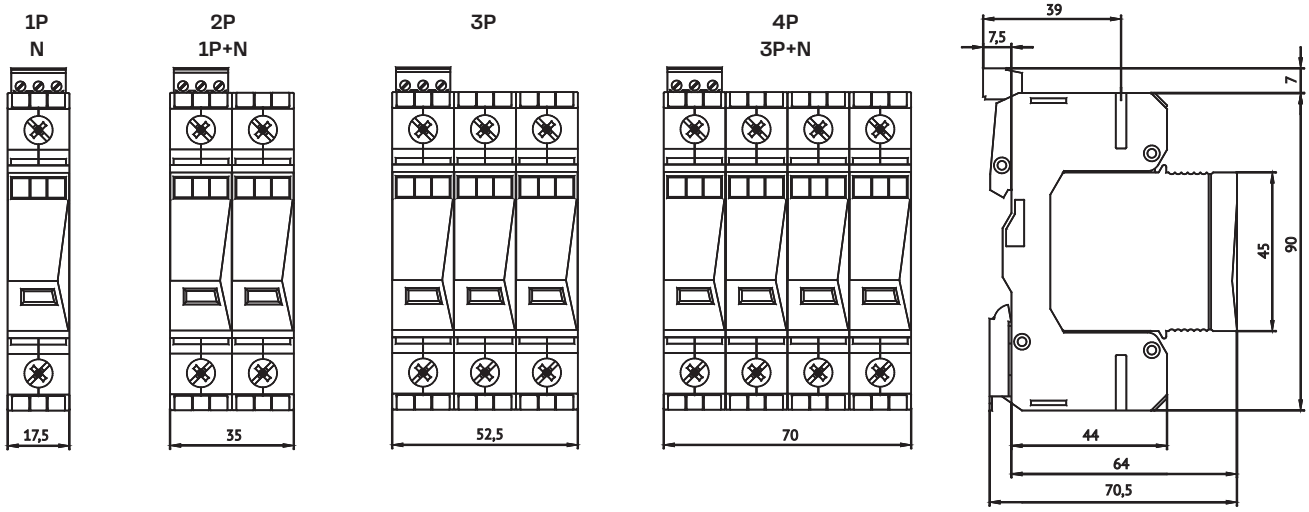

OptiDin

↗ Modular contactors

Electromechanical modular contactors KEAZ are used in automation and control systems of various technological processes, including in air conditioning, ventilation, heating and lighting systems.

Designation

OptiDin MK-100 - 25 4 0 - 230 AC (L)

(1) (2) (3) (4) (5) (6) (7) (8)

1	Series	OptiDin				
2	Configuration	MK-100		MK-100 (L)		
3	Rated operating current of contactor, A	20, 25, 40, 63, 80, 100		20, 25, 40, 63		
4	Number of normally open (NO) contacts	0	1	2	3	4
5	Number of normally closed (NC) contacts	0	1	2	3	4
6	Control coil circuit voltage, V	24, 48, 110, 230		230		
7	Control coil current type	AC				
8	Modification	-		L		

Series advantages

The contact status indication allows you to visually determine the status of the main circuit.

Silent operation. Modernized design. Contactors have no rattle of magnetic and contact system, even at voltage reduction by 60%, which allows to use them in places with frequent stay of people.

Silver-containing contacts provide high switching and mechanical wear resistance.

Din-rail mounting. The contactors are designed to be mounted on a 35 mm din-rail, which makes it possible to use the contactors together with modular devices in enclosures and to cover them with a plastron.

OptiDin MK-100 (L) Modular contactors for currents up to 63 A

Modular contactors OptiDin MK100 (L) are intended for use as components in control circuits for electric drives, ventilation and air conditioning systems, heating, lighting, process automation systems, where frequent and remote load switching with a rated current of up to 63 A is required. OptiDin MK-100 (L) is provided with a visual indication for the contacts status. The voltage in the main contacts circuit is 230 and 400 V AC, frequency 50 Hz. The rated voltage of the control coil is 230V AC. Can also be used for DC circuits. Modular contactors are installed in switchboards of residential and office premises, hotels, hospitals, shopping centers, industrial buildings and public places.

OptiDin MK-100 (L) are used for remote switching and automatic control of equipment such as:
lighting equipment;
single-phase and three-phase electric motors;
various pumps;
air conditioners;
electric heaters.

Contactors comply with requirements of GOST IEC 60947-4-1-2021, TR TS 004/2011.

Items

				OptiDin MK-100 (L)			
			Appearance				
Electrical circuit diagram	Main circuit contact type	Control coil voltage, V	Control coil current type	Rated current In, A			
				20	25	40	63
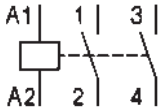	2NO	230	AC	343728	343730	343732	343734
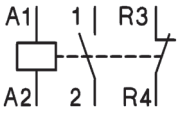	1NO+1NC	230	AC	343727	343729		
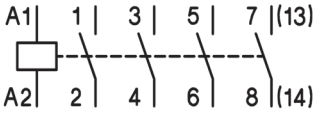	4NO	230	AC		343731	343733	343735

Technical specification

Parameter		OptiDin MK-100-20 (L) (2 poles)	OptiDin MK-100-25 (L) (2 poles)	OptiDin MK-100-25 (L) (4 poles)	OptiDin MK-100-40 (L) (2 poles)	OptiDin MK-100-40 (L) (4 poles)	OptiDin MK-100-63 (L) (2 poles)	OptiDin MK-100-63 (L) (4 poles)
Technical parameters								
Main circuit rated current, A		20; 25; 40; 63						
Main circuit rated voltage, V	Alternating current, AC	230; 400						
	Direct current, DC	220						
Type of control circuit current, V		230AC						
Operating range of control circuit voltage, %		85-110						
Rated frequency, Hz		50						
Rated voltage of contactors for insulation, V		500						
Rated conditional short-circuit current, A		3000						
Minimum opening of open contacts, mm		3						
Switching wear resistance, cycles	AC-1/AC-7a	150000						
	AC-3/AC-7b	150000						
Mechanical wear resistance, cycles		1000000						
Impulse withstand voltage, kV		6						
Protection rating as per GOST 14254-2015		IP20						
Control circuit screws tightening torque, N·m		0,5						
Installation tool slot type for tightening of the control circuit screws		PZ1						
Main circuit screw tightening torque, N·m		1,2			2			
Installation tool slot type for tightening of the main circuit screws		PZ1			PZ2			
Operating position in space*		Fixing on din-rail with control circuit terminals up and down						
Environmental pollution degree		3						
Group of operating conditions according to GOST 30631-99**		M7						
Operating temperature range, °C		- 45 to + 60						
Power loss per pole, W		2	3	2	3	3	7	7
Maximum switching frequency, cycle/h	DC-1, DC-3	60						
	AC-1, AC-3	300			600			
	No load	1000						
Control circuit								
Control circuit power consumption, no more, V·A	Switching on	9	9	25	25	45	25	45
	Retention	4,2	4,2	6	6	8	6	8
Switch-on delay, ms		7-16	7-16	9-15	9-15	11-15	9-15	11-15
Switch-off delay, ms		6-12	6-12	4-8	4-8	6-13	4-8	6-13
Contact specifications								
Rated operating current, A	AC-1/AC-7a	20	25	25	40	40	63	63
	AC-3/AC-7b	-	9	9	-	-	32	32
Rated load power for application category AC1/AC7a at 230 V, kW		4	5	-	9	-	11,6	-
Rated load power for application category AC1/AC7a at 400 V, kW		-	-	16	-	25,7	-	40
Rated load power for application category AC3/AC7b at 230 V, kW		1,2	1,5	-	3	-	3,3	-
Rated load power for application category AC3/AC7b at 400 V, kW		-	-	4	-	9	-	11
Breaking capacity at direct current (main circuit voltage 220 V, application category DC-1), A								
NO contacts	1 pole	0,4	0,5	0,5	0,7	0,7	0,7	0,7
	2 poles in series	-	4	4	5	5	6	6
	3 poles in series	-	-	10	-	15	-	16
	4 poles in series	-	-	15	-	20	-	21
NC contacts	1 pole	0,3	0,4	0,4	0,5	0,5	0,5	0,5
	2 poles in series	-	3	3	3,5	3,5	4,5	4,5
	3 poles in series	-	-	7,5	-	11	-	12
	4 poles in series	-	-	11	-	15	-	15,5
Breaking capacity at direct current (main circuit voltage 220 V, application category DC-3), A								
NO contacts	1 pole	-	0,1	0,1	0,3	0,3	0,3	0,3
	2 poles in series	-	0,5	0,5	1	1	1	1
	3 poles in series	-	-	3	-	4	-	4
	4 poles in series	-	-	8	-	10	-	10
NC contacts	1 pole	-	0,075	0,075	0,2	0,2	0,2	0,2
	2 poles in series	-	0,375	0,375	0,75	0,75	0,75	0,75
	3 poles in series	-	-	2	-	3	-	3
	4 poles in series	-	-	6	-	7,5	-	7,5

* Deviation from vertical position up to 90° to the right and left is allowed.
** Vibration loads with a frequency from 5 to 100 Hz with acceleration up to 1 g.

Connection

Device	Cross-section of conductor connected to main circuit, mm²		Cross-section of conductor connected to control circuit, mm²	
	Single-core	Multicore	Single-core	Multicore
OptiDin MK100-20	1,5-10	1,5-6	0,75 - 2,5	
OptiDin MK100-25				
OptiDin MK100-40	1,5-25	1,5-16		
OptiDin MK100-63				

Overall dimensions (mm)

OptiDin MK-100-20 (L), OptiDin MK-100-25 (L) 2-pole version

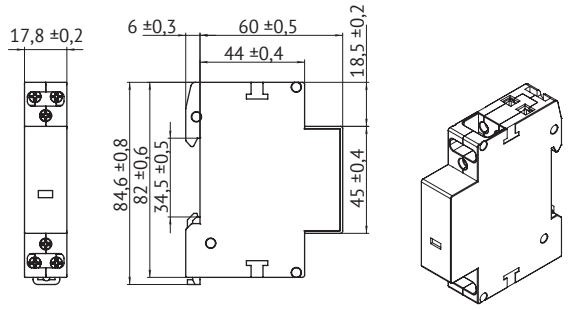

OptiDin MK-100-25 (L) 4-pole version

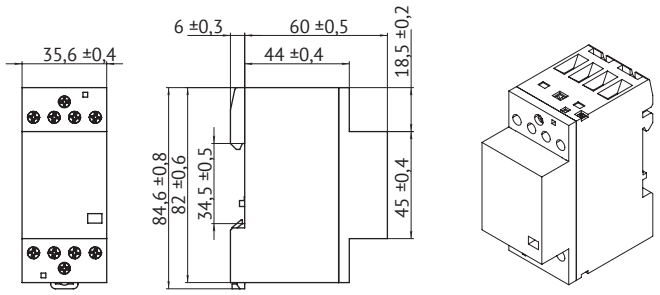

OptiDin MK-100-40 (L), OptiDin MK-100-63 (L) 2-pole version

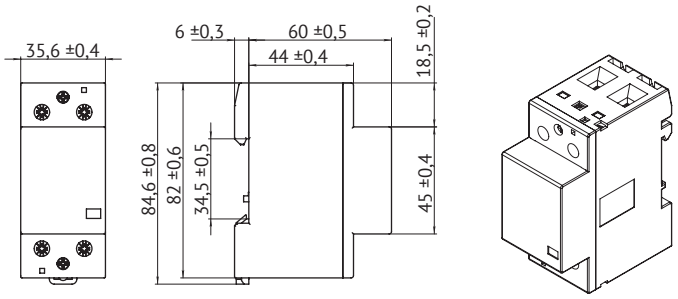

OptiDin MK-100-40 (L), OptiDin MK-100-63 (L) 4-pole version

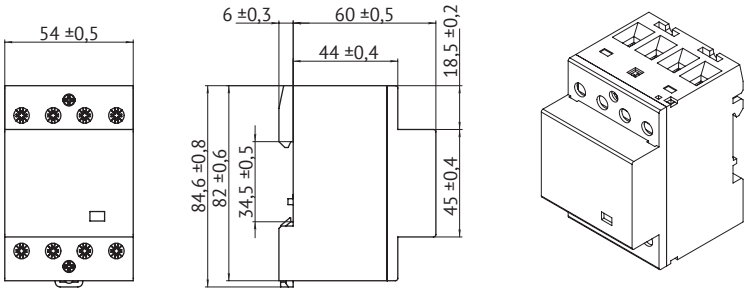

Selection table for optimal modification of OptiDin MK-100 (L) contactors for switching various light sources

Lamp type	Power, W	Maximum number of lamps per pole at 230 V, 50 Hz			
		OptiDin MK-100 -20 (L)	OptiDin MK-100-25 (L)	OptiDin MK-100-40 (L)	OptiDin MK-100-63 (L)
Vacuum and halogen incandescent lamps	15	86	110	228	480
	25	52	72	180	290
	40	32	50	122	195
	60	21	33	86	130
	75	17	26	69	104
	100	13	20	52	78
	150	8	13	34	52
	200	6	10	26	39
	250	5	8	20	31
	300	4	6	17	26
	500	2	4	10	15
	1000	1	2	5	7
Energy-saving lamps	3	42	52	83	120
	5	42	52	83	120
	7	42	52	83	120
	9	36	45	72	104
	11	33	41	65	94
	15	30	37	59	85
	20	29	36	57	82
	23	28	35	56	81
Fluorescent lamps					
Single-lamp without compensation	18	22	24	90	140
	28	22	24	90	140
	36	17	20	65	95
	58	14	17	45	70
Single-lamp with compensation	18	7	8	48	73
	28	7	8	48	73
	36	7	8	48	73
	58	4	5	31	47
Two-lamp with series compensation	18	30	40	100	150
	28	24	31	78	118
	36	17	24	65	95
	58	10	14	40	60
Compact fluorescent lamps with electronic control gear (ECG)					
Single-lamp	18	25	31	49	71
	28	18	22	35	50
	36	14	17	27	39
	58	8	10	16	23
Two-lamp	18	12	15	24	35
	28	9	11	17	25
	36	7	8	13	19
	58	4	5	8	11
Compact fluorescent lamps					
Normal power supply	5	38	48	77	121
	7	27	34	54	86
	9	21	26	42	67
	11	17	21	35	55
Electronic power supply	5	39	49	78	124
	7	39	49	78	124
	9	30	38	60	96
	11	25	31	50	79
High-pressure mercury lamps					
No compensation	50	14	18	38	55
	80	10	13	29	42
	125	7	9	20	29
	250	4	5	10	15
	400	2	3	7	10
Feedback compensation	50	4	5	31	47
	80	4	5	27	41
	125	3	4	22	33
	250	1	2	12	18
	400	1	1	9	13

Lamp type	Power, W	Maximum number of lamps per pole at 230 V, 50 Hz			
		OptiDin MK-100 -20 (L)	OptiDin MK-100-25 (L)	OptiDin MK-100-40 (L)	OptiDin MK-100-63 (L)
Metal halide lamps					
No compensation	35	18	22	43	60
	70	10	12	23	32
	150	5	7	12	18
	250	3	4	7	10
	400	3	3	6	9
Feedback compensation	35	5	6	36	50
	70	2	3	18	25
	150	1	1	11	15
	250	-	1	6	9
	400	-	1	6	8
Low-pressure sodium lamps					
No compensation	18	22	27	71	90
	35	7	9	23	30
	55	7	9	23	30
	90	4	5	14	19
	135	3	4	10	13
	180	3	4	10	13
Feedback compensation	18	6	7	44	66
	35	1	1	11	16
	55	1	1	11	16
	90	1	1	8	12
	135	-	-	4	7
	180	-	-	4	7
High-pressure sodium lamps					
No compensation	150	5	6	17	22
	250	3	4	10	13
	400	2	2	6	8
	1000	-	1	3	3
Feedback compensation	150	1	1	11	16
	250	-	1	6	10
	400	-	-	4	6
	1000	-	-	2	3

OptiDin MK-100 Modular contactors for currents up to 100 A

OptiDin MK-100 modular contactors are designed for frequent switching of loads with rated current up to 100 A typical for electric boilers, direct heating convectors, heat accumulators. The devices are used to automate and control various processes, including those in air conditioning, ventilation, and lighting systems.

OptiDin MK-100 is provided with a visual indication for the contacts status. The voltage in the main contacts circuit is 230 and 400 V AC, frequency 50 Hz. The supply voltage for the control coils is 24, 48, 110 and 230 V (AC). Modular contactors are installed in switchboards of residential and office premises, hotels, hospitals, shopping centers, industrial buildings and public places.

OptiDin MK-100 are used for remote switching and automatic control of equipment such as: single-phase and three-phase
electric motors;
various pumps;
air conditioners;
electric heaters;
lighting equipment.

Contactors comply with requirements of GOST IEC 60947-4-1.

Items

				OptiDin MK-100					
			Appearance						
Electrical circuit diagram	Main circuit contact type	Control coil voltage, V	Control coil current type	Rated current In, A					
				20	25	40	63	80	100
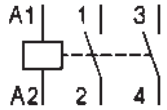	2NO	24	AC	321126	321138	321166	321170	321222	321226
		48	AC	321125	321137	321165	321169	321221	321225
		110	AC	321124	321136	321164	321168	321220	321224
		230	AC	321123	321135	321163	321167	321219	321223
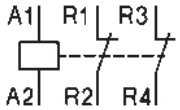	2NC	24	AC	321130	321142	321174	321178	321230	321234
		48	AC	321129	321141	321173	321177	321229	321233
		110	AC	321128	321140	321172	321176	321228	321232
		230	AC	321127	321139	321171	321175	321227	321231
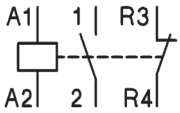	1NO+1NC	24	AC	321134	321146	321182	321186	321238	321242
		48	AC	321133	321145	321181	321185	321237	321241
		110	AC	321132	321144	321180	321184	321236	321240
		230	AC	321131	321143	321179	321183	321235	321239
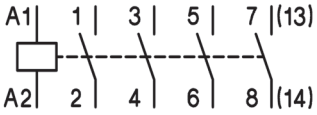	4NO	24	AC		321150	321190	321194	321246	321250
		48	AC		321149	321189	321193	321245	321249
		110	AC		321148	321188	321192	321244	321248
		230	AC		321147	321187	321191	321243	321247
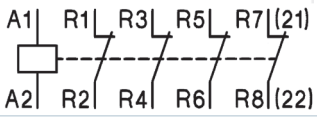	4NC	24	AC		321154	321198	321202	321254	321258
		48	AC		321153	321197	321201	321253	321257
		110	AC		321152	321196	321200	321252	321256
		230	AC		321151	321195	321199	321251	321255
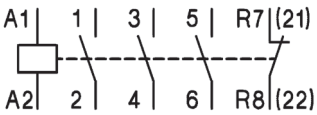	3NO+1NC	24	AC		321162	321206	321210	321262	321266
		48	AC		321161	321205	321209	321261	321265
		110	AC		321160	321204	321208	321260	321264
		230	AC		321159	321203	321207	321259	321263
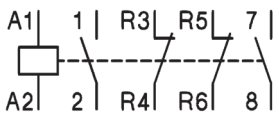	2NO+2NC	24	AC		321158	321214	321218	321270	321274
		48	AC		321157	321213	321217	321269	321273
		110	AC		321156	321212	321216	321268	321272
		230	AC		321155	321211	321215	321267	321271

Technical specification

Parameter		OptiDin MK-100-20 (2 poles)	OptiDin MK-100-25 (2 poles)	OptiDin MK-100-25 (4 poles)	OptiDin MK-100-40 (2,4 poles)	OptiDin MK-100-63 (2,4 poles)	OptiDin MK-100-80 (2,4 poles)	OptiDin MK-100-100 (2,4 poles)
Technical parameters								
Rated operating voltage of main circuit, V		440						
Mechanical wear resistance, cycles		3000000						
Rated insulation voltage, V		690						
Minimum opening of open contacts, mm		3						
Power loss per pole, W		2	3	2	3	7	7	7
Overcurrent resistance, A		72	72	72	216	240	240	240
Maximum switching frequency, cycle/h	DC-1, DC-3	60						
	AC-1, AC-3	300			600			
	No load	1000						
Test discharge voltage 1.2/50 µs (GOST IEC 61000-4-5), kV		6						
Impulse withstand voltage, kV		6						
Control circuit								
Rated coil voltage, V		24, 48, 110, 230						
Coil voltage operating range, %		85...110						
Rated frequency, Hz		50(50/60)						
Coil power consumption, max., VA/W	Switching on	9/1,6	9/1,6	25/2,5	45/2,6		45/2,6	45/2,6
	Retention	4,2/1,6	4,2/1,6	6–4	8/2,6		8/2,6	8/2,6
Switch-on delay, ms		7–16	7–16	9–15	11–15	11–15	11–15	11–15
Switch-off delay, ms		6–12	6–12	4–8	6–13	6–13	6–13	6–13
Contact specifications								
Rated operating current, A	AC-1/AC-7a	20	25	25	40	63	80	100
	AC-3/AC-7b	-	-	9	27	30	38	48
Rated load power for application category AC3/AC7b at 230 V, kW		1,1	1,3	-	-	-	-	-
Rated load power for application category AC3/AC7b at 400 V, kW		1,2	4	4	12,5	15	19	24
Electrical wear resistance, cycles	AC-1/AC-7a	250000						
	AC-3/AC-7b	250000						

Connection

Device	Cross-section of conductor connected to main circuit, mm²		Cross-section of conductor connected to control circuit, mm²	
	Single-core	Multicore	Single-core	Multicore
OptiDin MK-100-20	1–10	1–6	1–2,5	1–2,5
OptiDin MK-100-25	1–10	1–6	1–2,5	1–2,5
OptiDin MK-100-40	1,5–20	1,5–16	1–2,5	1–2,5
OptiDin MK-100-63	1,5–20	1,5–16	1–2,5	1–2,5
OptiDin MK-100-80	1,5–20	1,5–16	1–2,5	1–2,5
OptiDin MK-100-100	1,5–20	1,5–16	1–2,5	1–2,5
OptiDin MK11	0,5–2,5	0,5–2,5	-	-

Additional devices for quick and safe installation

Appearance	Name	Code
	OptiDin MK11 Auxiliary contact block	321328

WARNING!!! OptiDin MK11 auxiliary contact block is not suitable for installation on single-module contactors, i.e. for rated currents of 20, 25A with two poles (contacts) of the main circuit.

Overall dimensions (mm)

OptiDin MK-100-20

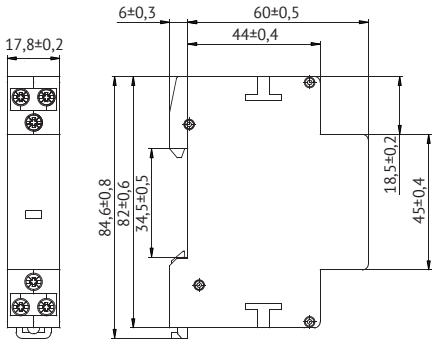

OptiDin MK-100-25

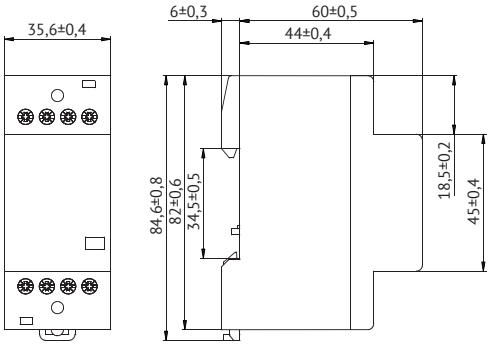

OptiDin MK-100-40
OptiDin MK-100-63

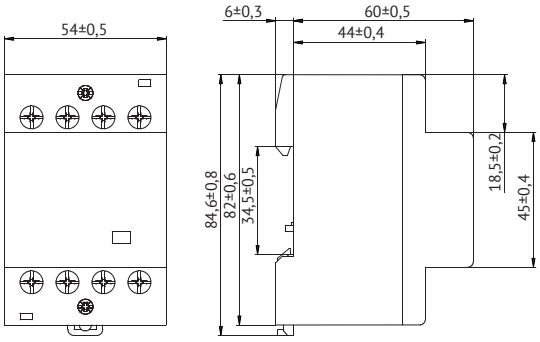

OptiDin MK-100-80
OptiDin MK-100-100

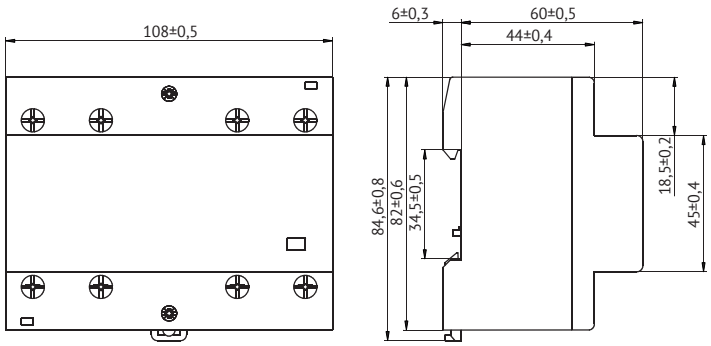

OptiDin MK11

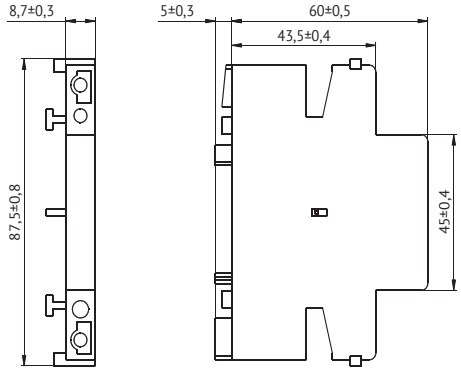

Selection table for optimal modification of OptiDin MK-100 contactors for switching of various light sources

Lamp type	Power, W	Maximum number of lamps per pole at 230 V, 50 Hz					
		OptiDin MK-100-20	OptiDin MK-100-25	OptiDin MK-100-40	OptiDin MK-100-63	OptiDin MK-100-80	OptiDin MK-100-100
Vacuum and halogen incandescent lamps	15	86	110	228	480	610	762
	25	52	72	180	290	368	460
	40	32	50	122	195	248	310
	60	21	33	86	130	165	206
	75	17	26	69	104	132	165
	100	13	20	52	78	99	124
	150	8	13	34	52	66	83
	200	6	10	26	39	50	62
	250	5	8	20	31	39	49
	300	4	6	17	26	33	41
	500	2	4	10	15	19	24
	1000	1	2	5	7	9	11
Energy-saving lamps	3	42	52	83	120	152	190
	5	42	52	83	120	152	190
	7	42	52	83	120	152	190
	9	36	45	72	104	132	165
	11	33	41	65	94	119	149
	15	30	37	59	85	108	135
	20	29	36	57	82	104	130
	23	28	35	56	81	103	129
Fluorescent lamps							
Single-lamp without compensation	18	22	24	90	140	178	222
	28	22	24	90	140	178	222
	36	17	20	65	95	121	151
	58	14	17	45	70	89	111
Single-lamp with compensation	18	7	8	48	73	93	116
	28	7	8	48	73	93	116
	36	7	8	48	73	93	116
	58	4	5	31	47	60	75
Two-lamp with series compensation	18	30	40	100	150	190	238
	28	24	31	78	118	150	187
	36	17	24	65	95	121	151
	58	10	14	40	60	76	95
Compact fluorescent lamps with electronic control gear (ECG)							
Single-lamp	18	25	31	49	71	90	113
	28	18	22	35	50	63	79
	36	14	17	27	39	50	62
	58	8	10	16	23	29	37
Two-lamp	18	12	15	24	35	44	56
	28	9	11	17	25	32	40
	36	7	8	13	19	24	30
	58	4	5	8	11	14	17
Compact fluorescent lamps							
Normal power supply	5	38	48	77	121	154	192
	7	27	34	54	86	109	137
	9	21	26	42	67	85	106
	11	17	21	35	55	70	87
Electronic power supply	5	39	49	78	124	157	197
	7	39	49	78	124	157	197
	9	30	38	60	96	122	152
	11	25	31	50	79	100	125
High-pressure mercury lamps							
No compensation	50	14	18	38	55	70	87
	80	10	13	29	42	53	67
	125	7	9	20	29	37	46
	250	4	5	10	15	19	24
	400	2	3	7	10	13	16
Feedback compensation	50	4	5	31	47	60	75
	80	4	5	27	41	52	65
	125	3	4	22	33	42	52
	250	1	2	12	18	23	29
	400	1	1	9	13	17	21

Lamp type	Power, W	Maximum number of lamps per pole at 230 V, 50 Hz					
		OptiDin MK-100-20	OptiDin MK-100-25	OptiDin MK-100-40	OptiDin MK-100-63	OptiDin MK-100-80	OptiDin MK-100-100
Metal halide lamps							
No compensation	35	18	22	43	60	76	95
	70	10	12	23	32	41	51
	150	5	7	12	18	23	29
	250	3	4	7	10	13	16
	400	3	3	6	9	11	14
Feedback compensation	35	5	6	36	50	63	79
	70	2	3	18	25	32	40
	150	1	1	11	15	19	24
	250	-	1	6	9	11	14
	400	-	1	6	8	10	13
Low-pressure sodium lamps							
No compensation	18	22	27	71	90	114	143
	35	7	9	23	30	38	48
	55	7	9	23	30	38	48
	90	4	5	14	19	24	30
	135	3	4	10	13	17	21
	180	3	4	10	13	17	21
Feedback compensation	18	6	7	44	66	84	105
	35	1	1	11	16	20	25
	55	1	1	11	16	20	25
	90	1	1	8	12	15	19
	135	-	-	4	7	9	11
	180	-	-	4	7	9	11
High-pressure sodium lamps							
No compensation	150	5	6	17	22	28	35
	250	3	4	10	13	17	21
	400	2	2	6	8	10	13
	1000	-	1	3	3	4	5
Feedback compensation	150	1	1	11	16	20	25
	250	-	1	6	10	13	16
	400	-	-	4	6	8	10
	1000	-	-	2	3	4	5

OptiDin

Modular command and signaling devices

OptiDin SL63 and FSL63 Modular indicators

Signal lamps are designed for light indication of the operating state of electrical equipment in electrical circuits with voltage up to 230 V AC, frequency 50 Hz.

Phase indicator lights are designed for light indication of voltage presence in each of the phases.

Signal lamps and phase indicator lights comply with the requirements of GOST R 50030.5.1 (Appendix J), TR TS 004/2011 and are manufactured as per TS3428-070-05758109-2012.

Designation

OptiDin SL63 - R 230 AC - UHL3

(1) (2) (3) (4) (5) (6)

1	Series	OptiDin				
2	Lamp type and configuration	SL63				
3	Conventional color designation	R — red	Y — yellow	G — green	B — blue	W — white
4	Rated operating voltage, V	230	110	48	24	
5	Current type	AC	AC/DC			
6	Climatic version	UHL3 (international TC3)				

OptiDin FSL63 - 230 - UHL3

(1) (2) (3) (4)

1	Series	OptiDin			
2	Phase indicator light type	FSL63			
3	Rated operating voltage, V	230	110	48	24
4	Climatic version	UHL3 (international TC3)			

Items

Type		Signal lamps OptiDin SL63					Phase indicator light OptiDin FSL63
Rated operating voltage in 50 Hz AC circuit Ue, V	Current type						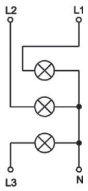
		Red	Yellow	Green	Blue	White	
24	AC/DC	138609	138613	138617	138621	138625	
48	AC/DC	138608	138612	138616	138620	138624	
110	AC	138607	138611	138615	138619	138623	
230	AC	138606	138610	138614	138618	138622	138626

Technical specification

	OptiDin SL63	OptiDin FSL63
Basic specifications		
Insulation voltage Ui, V	230	400
Pollution rating	3	
Rated operating current of information indicator at 230 V, max., A	0,02	
Rated electric power consumption, max., VA	5	15
Operating mode	Continuous	
Additional specifications		
Protection class as per GOST 14254	IP20	
Climatic category as per GOST 15150	UHL3	
Operating temperature range, °C	-60 to +40	
Storage temperature range, °C	-45 to +50	
Weight, g		
OptiDin SL63	68	
OptiDin FSL63	100	

Connection

Tightening ptorque, N/m	Signal lamps			Tightening ptorque, N/m	Phase indicator light		
	Conductor cross-section, mm²				Conductor cross-section, mm²		
	Flexible copper (multicore)	Rigid copper (multicore and single-core)	Aluminum (multicore and single-core)		Flexible copper (multicore)	Flexible aluminum	Aluminum rigid
1,5	1,5–6			0,5	1,5–25		

Overall dimensions (mm)

OptiDin SL63

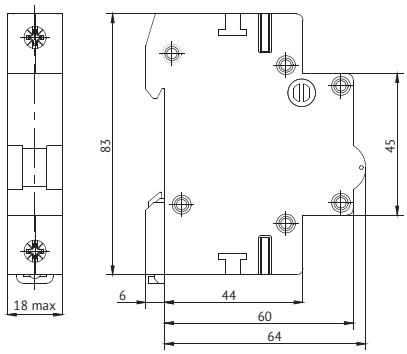

OptiDin FSL63

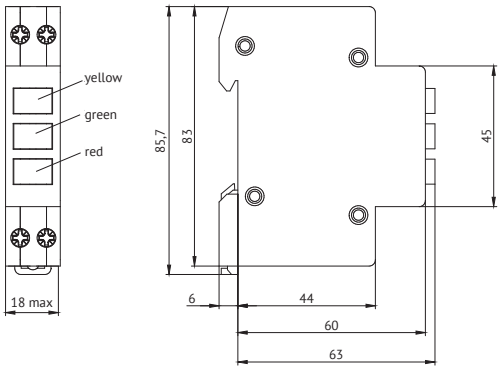

OptiDin KM63 Modular buttons

OptiDin KM63 control buttons are designed for operational control of contactors (magnetic starters), various automation relays and other process equipment in AC electrical circuits with voltage up to 230 V.

The buttons comply with the requirements of GOST R 50030.5.1, TR TS 004/2011 and are manufactured as per TS3428-071-05758109-2012.

Designation

OptiDin KM63 - C - 11 - UHL3

1 2 3 4 5

1	Series	OptiDin				
2	Configuration	KM63				
3	Type of control mechanism design and contact element function	A	B	C	AF	CF
4	Order and numerical designation of make and break contacts number	10	01	11	20	02
5	Climatic category and placement category as per GOST 15150	UHL3 (international TC3)				

Items

	Modular button			Modular button with two independent controls	Modular button with built-in green indicator light		
Appearance							
Circuit diagrams	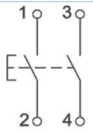	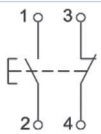	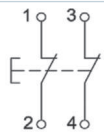	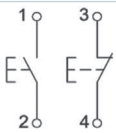	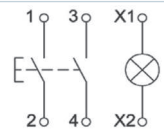	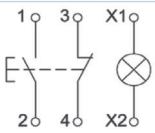	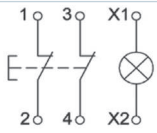
Without locking of control in lower position	138899	138998	138800	138904	138906	138905	138907
Circuit diagrams	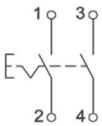	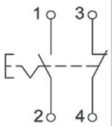	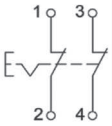		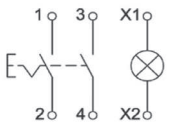	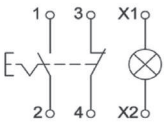	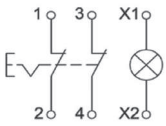
With locking of control in lower position	138902	138901	138903		138909	138908	138910

Technical specification

Basic specifications		OptiDin KM63
Rated operating voltage in 50 Hz AC circuit. Ue, V		230
Rated operation current Ie, A		6
Insulation voltage Ui, V		230
Additional specifications		
Protection class as per GOST 14254		IP20
Wear resistance, циклов	Switching	100 000
	Mechanical	250 000
Overcurrent protection: circuit breaker type OptiDin BM63 with characteristic type B, for rated current, A		8
Conventional short-circuit current, A		1000
Power consumption by one normally closed contact, max., W		3
Conventional free air thermal current Ith, A		16
Conventional enclosed thermal current Ithe, A		6
Climatic category as per GOST 15150		UHL3
Operating temperature range, °C		от -60 до +40
Storage temperature range, °C		от -45 до +50
Weight, g		
OptiDin KM63		68

Connection

Tightening ptorque, N/m	Button lead clamps			Tightening ptorque, N/m	Indicator light lead clamps		
	Conductor cross-section, mm²				Conductor cross-section, mm²		
	Flexible copper (multicore)	Rigid copper (multicore and single-core)	Aluminum (multicore and single-core)		Flexible copper (multicore)	Flexible aluminum	Aluminum rigid
0,8	1,5–6			0,4	0,5–4		

Overall dimensions (mm)

OptiDin KM63-A(AF)

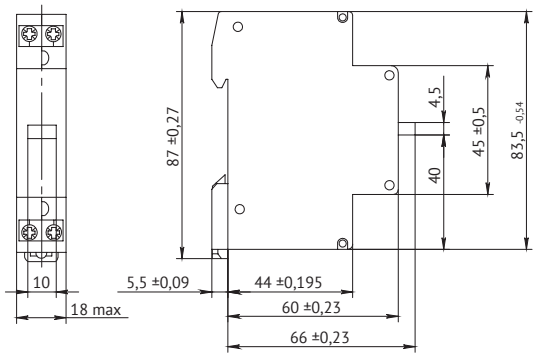

OptiDin KM63-B

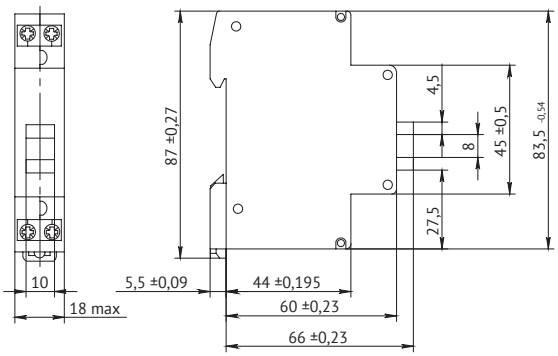

OptiDin KM63-C(CF)

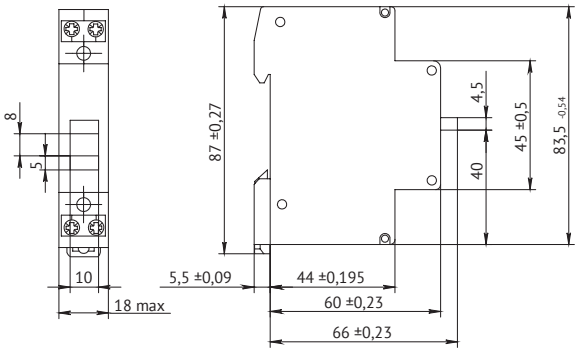

OptiDin ZM63 Modular bells

Modular electric bells are designed for use in 230 V AC mains and serve to signal emergency situations in electrical circuits.

The bells comply with the requirements of GOST R 7220-87, GOST R 50030.5.1, TR TS 004/2011.

Designation

OptiDin ZM63 - 230 AC - UHL3

1 2 3 4 5

1	Series	OptiDin		
2	Phase indicator configuration	ZM63		
3	Rated operating voltage, V	230	24	12
4	Current type	AC		
5	Climatic category and placement category as per GOST 15150	UHL3		

Items

Type	OptiDin ZM63
Circuit diagrams	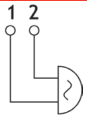
Rated operating voltage in 50 Hz AC circuit, Ue, V	
12	138630
24	138629
230	138627

Technical specification

Parameter	Value
Number of poles	single-pole
Rated operating voltage, V	12, 24, 110, 230
Sound volume, max, dB	90
Rated operating current Ie, at 230 V, max, A	0,03
Rated frequency, Hz	50
Protection class as per GOST 14254	IP20
Cross-section of wire connected to lead clamps, mm²	1,5 ÷ 6
Average service life, years	10
Climatic category and placement category as per GOST 15150	UHL3
Operation mode	intermittent
Rated impulse withstand voltage, V	230
Macca OptiDin ZM63, г	100

Connection

Tightening ptorque, N/m	Conductor cross-section, mm²	
	Copper (multicore and single-core)	Aluminum (multicore and single-core)
1,5	1,5–6	

Overall dimensions (mm)

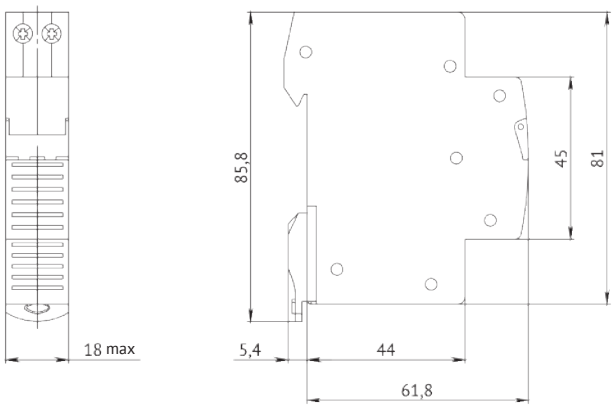

Circuit breaker time current curve

Dependence of rated operating currents of overcurrent trip devices of OptiDin BM63, OptiDin BM63 DC circuit breakers on ambient temperature

	Ambient temperature (°C)												
In(A)	-25	-20	-10	0	10	20	30	35	40	45	50	55	60
1	1,2	1,2	1,2	1,1	1,09	1,05	1	1	0,94	0,94	0,93	0,9	0,89
2	2,4	2,4	2,3	2,2	2,2	2,1	2	2	1,9	1,9	1,9	1,8	1,8
3	3,5	3,4	3,3	3,3	3,3	3,2	3	2,9	2,8	2,8	2,75	2,7	2,7
4	4,9	4,8	4,7	4,5	4,3	4,2	4	3,9	3,9	3,8	3,7	3,6	3,5
5	5,9	5,8	5,7	5,6	5,4	5,2	5	4,9	4,8	4,6	4,5	4,3	4,3
6	7,3	7,2	7	6,7	6,54	6,38	6	5,82	5,64	5,6	5,6	5,4	5,3
8	9	8,9	8,9	8,8	8,7	8,4	8	7,8	7,5	7,4	7,2	7,2	7
10	12	12	12	11	10,9	10,5	10	9,6	9,3	9,3	9,2	9	8,9
13	16	16	15	15	14	14	13	13	13	12	12	12	12
16	20	19	19	18	17,44	16,8	16	15,52	15,04	15	14,8	14	14
20	24	24	23	22	21,8	21	20	19,4	18,8	18,5	18,2	18	18
25	31	30	29	28	27,25	26,3	25	24,25	23,5	24	23	23	22
32	39	38	37	36	35	33,6	32	31	30	30	30	29	28
40	49	48	47	45	43	42	40	38,4	36,8	37	36	36	35
50	61	60	58	56	54,5	52,5	50	48,5	47	47	46	45	44
63	77	76	73	71	68,7	66,2	63	61,1	59,2	60	58	57	56

Test temperature +30 °C

OptiDin BM63 circuit breaker time current curve as per GOST IEC 60898-1

Circuit breakers with protective characteristic type V
Electromagnetic release trips in the range of 3 to 5 In. The thermal release does not trip within 1 hour at 1.13 In and trips within 1 hour at 1.45 In.

Circuit breakers with protective characteristic type C
Electromagnetic release trips in the range of 5 to 10 In.
The thermal release does not trip within 1 hour at 1.13 In and trips within 1 hour at 1.45 In.

Circuit breakers with protective characteristic type D
Electromagnetic release trips in the range of 10 to 20 In.
The thermal release does not trip within 1 hour at 1.13 In and trips within 1 hour at 1.45 In.

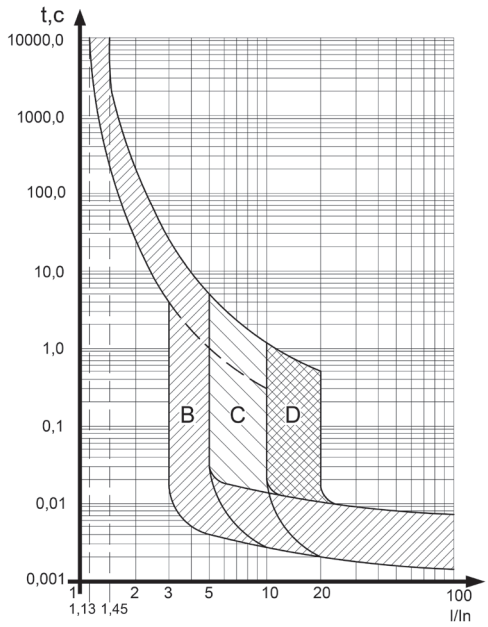

OptiDin BM63 circuit breaker time current curve as per GOST R 50030.2

Circuit breakers with protective characteristic type Z
Electromagnetic release trips in the range of 3.2 to 4.8 In.
The thermal release does not trip within 1 hour at 1.05 In and trips within 1 hour at 1.3 In.

Circuit breakers with protective characteristic type L
Electromagnetic release trips in the range of 6.4 to 9.6 In.
The thermal release does not trip within 1 hour at 1.05 In and trips within 1 hour at 1.3 In.

Circuit breakers with protective characteristic type K
Electromagnetic release trips in the range of 9.6 to 14.4 In.
The thermal release does not trip within 1 hour at 1.05 In and trips within 1 hour at 1.3 In

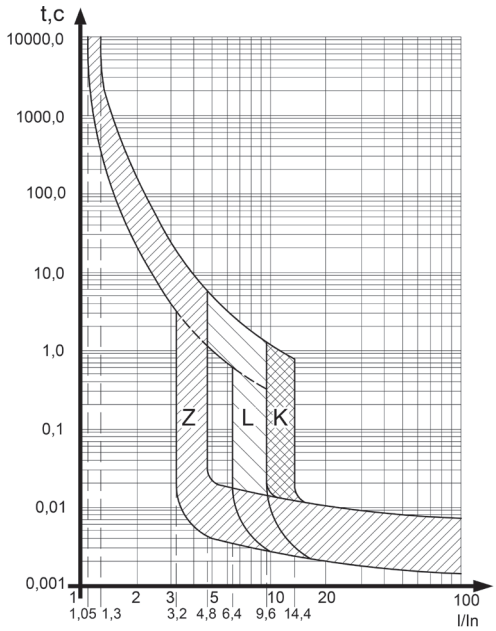

OptiDin BM63-OT circuit breaker time current curve as per GOST IEC 60898-1

Circuit breakers with protective characteristic type D
Electromagnetic release trips in the range of 10 to 20 In.
The thermal release does not trip within 1 hour at 1.1 In and trips within 1 hour at 1.4 In.
05 In and trips within 1 hour at 1.3 In,

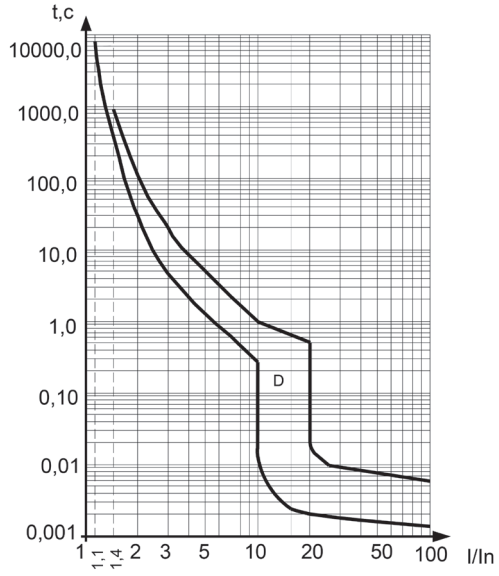

OptiDin BM63 DC DC circuit breaker time current curve as per GOST IEC 60898-2

Circuit breakers with protective characteristic type V
Electromagnetic release trips in the range of 3 to 5 In.
The thermal release does not trip within 1 hour at 1.13 In and trips within 1 hour at 1.45 In.

Circuit breakers with protective characteristic type C
Electromagnetic release trips in the range of 5 to 10 In.
The thermal release does not trip within 1 hour at 1.13 In and trips within 1 hour at 1.45 In.

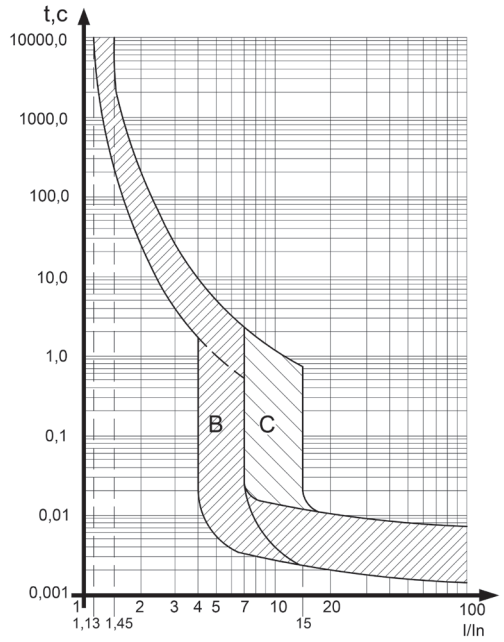

OptiDin BM63 DC circuit breaker time current curve as per GOST R 50030.2

Circuit breakers with protective characteristic type Z
Electromagnetic release trips in the range of 3.2 to 4.8 In.
The thermal release does not trip within 1 hour at 1.05 In and trips within 1 hour at 1.3 In.

Circuit breakers with protective characteristic type L
Electromagnetic release trips in the range of 6.4 to 9.6 In.
The thermal release does not trip within 1 hour at 1.05 In and trips within 1 hour at 1.3 In.

Circuit breakers with protective characteristic type K
Electromagnetic release trips in the range of 9.6 to 14.4 In.
The thermal release does not trip within 1 hour at 1.05 In and trips within 1 hour at 1.3 In.

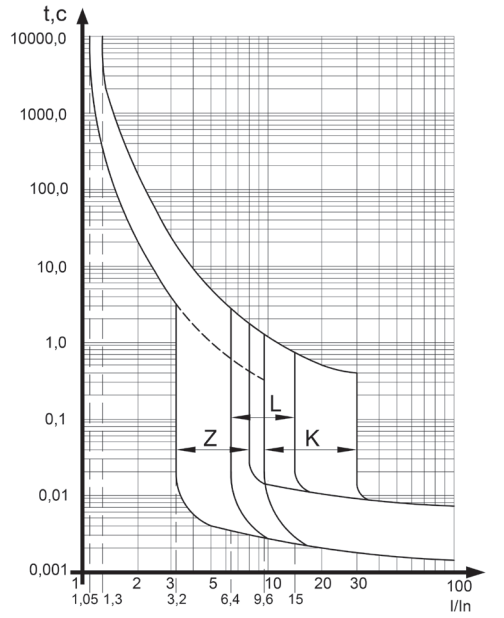

OptiDin BM125 circuit breaker time current curve as per GOST IEC 60947-2

Circuit breakers with protective characteristic type C
Electromagnetic release trips in the range of 5 to 10 In.
The thermal release does not trip within 2 hours at 1.05 In and trips within 2 hour at 1.3 In.

Circuit breakers with protective characteristic type D
Electromagnetic release trips in the range of 10 In to 20 In.
The thermal release does not trip within 2 hours at 1.05 In and trips within 2 hours at 1.3 In.

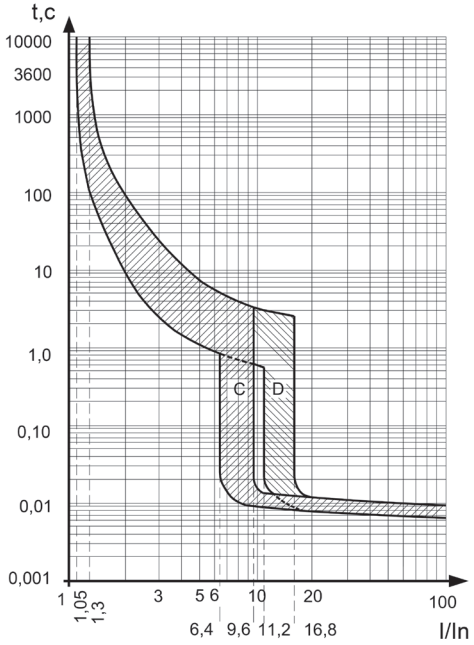

Time current curve of OptiDin D63 and OptiDin VD63 RCBOs as per GOST IEC 61009-1

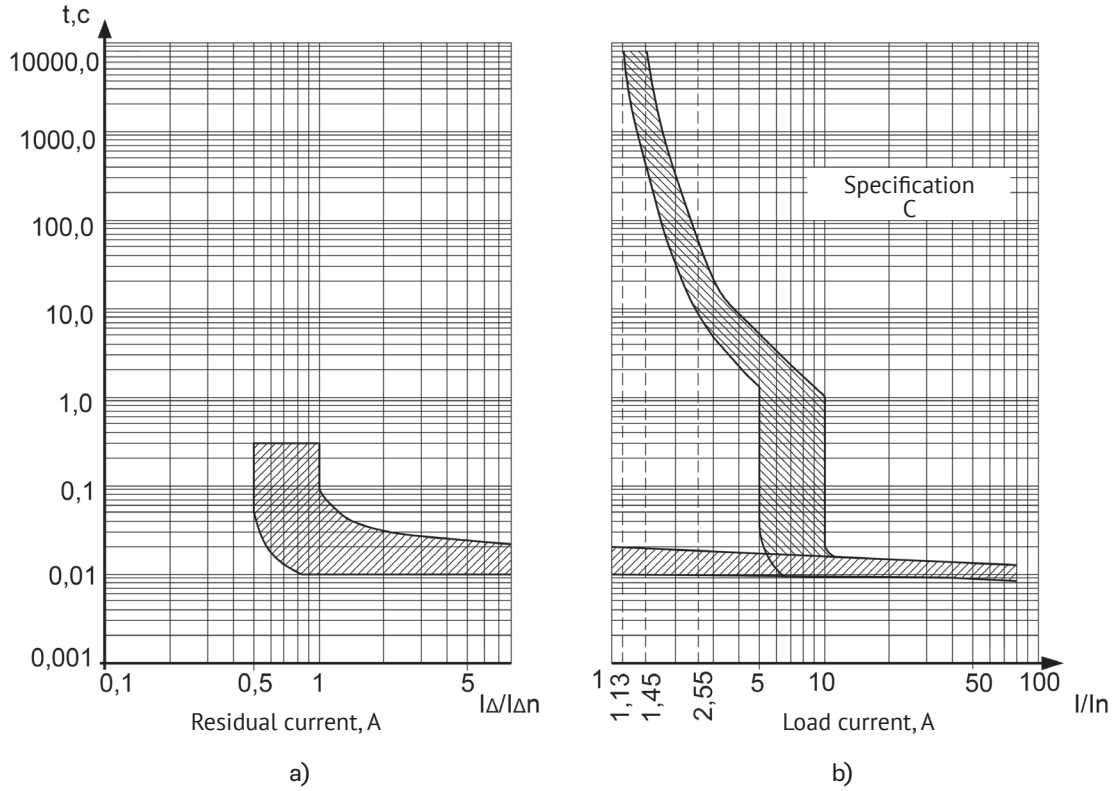

a) Tripping characteristic and trip time limits for residual current.
b) Protective characteristic under overcurrent conditions at a test temperature of plus 30°5°C, from a cold state, when current is passed through all protected poles of the RCBO.

OptiRel

Relay protection and automation devices

OptiRel C Interposing relays and accessories 81

OptiRel D Control and protection relays 115

A set of OptiRel relay devices is used to monitor the parameters of the electrical network, protect power consumers, control loads, and ensure galvanic isolation of electrical circuits. Modular relays are compact solutions with a width of 18 and 36 mm. The devices have convenient parameter setting and a wide range of supply voltages. The interposing relays have an excellent service life of up to 10 million switching cycles and are also used in harsh environments with temperatures from -40 to +70 °C and high humidity.

Interposing relay and accessories

OptiRel G 81

3 series: narrow, miniature and general-purpose relays
In (AC-15): up to 16 A
Control coil: from 5 to 240 V AC/DC
Number of CO contacts: up to 4

Control and protection relays

OptiRel D 115

Voltage, current, level, temperature control relays
Interposing and pulse relays
Time relay
Photo relay

OptiRel G

↗ Interposing relay and accessories

OptiRel G interposing (interface) relays are compact and general-purpose devices that are universally used in control and automation solutions. They are an integral part of modern automated process control systems and are effectively used in application where galvanic isolation, signal separation or amplification, as well as voltage coupling are required.

The range of interposing relays of KEAZ Company is represented by the most common and popular electromechanical devices consisting of a magnetic core with a control coil and output contacts, as well as a solid-state relays (optocouplers), which are used when it is necessary to ensure high switching frequency. The absence of moving parts in solid-state relays avoids wear and rattle of contracts, provides the possibility of relay operation under increased vibration, as well as high electrical wear resistance.

OptiRel G relays are available in 4 series, from the most compact to the most functional, as well as a wide range of additional components and accessories allowing the implementation of a solution in exact accordance with the requirements of the design documentation, the specifics of their application and the tasks to be solved.

The most popular series are available in two versions - both as components for assembly, which allows flexible configuration and stock optimization, and as ready-made solutions, which are a complete assembly of relay and mounting receptacle (base) and sold under a single code.

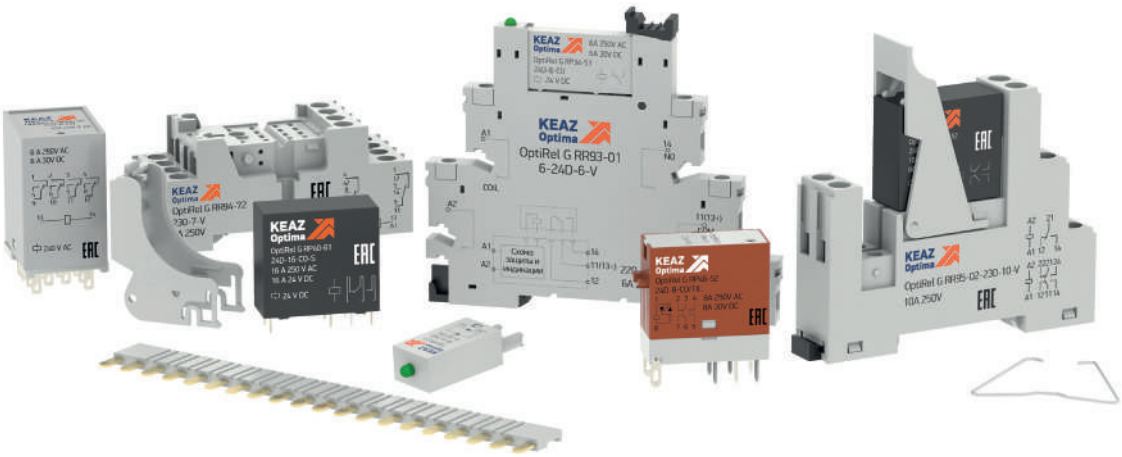

Turnkey solution

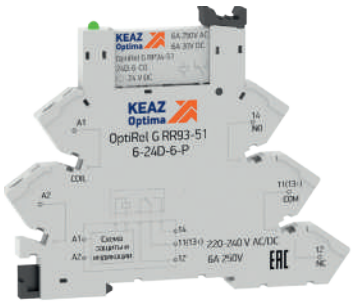

The relay modules RM38 and RM48 are an assembly of the most popular versions of plug-in relays and receptacles (bases).

Final solution assembly

The mandatory components for assembling a complete din-rail mounting solution are the plug-in relay itself and the receptacle required for its mounting and wiring. To ensure that the relay is securely fixed in the receptacle and for easy mounting and dismounting of the relay, a retainer is used, which is available separately. If additional functions such as e.g. surge overvoltage protection or operation indication are required, additional plug-in modules are available separately.

Selection guide

Series designation	Ultrafine interface relays	Pony relays	Industrial relays	General purpose relays
Series	RM38; RP34	RM48; RP40; RP41	RP46	RP55
Appearance				
Number of contacts	1 CO	1 CO; 2 CO; 1 NO; 2 NO	2 CO	2 CO; 3 CO; 4 CO
Rated current of the main circuit at the rated voltage, A	6	Up to 16	8	7; 10; 12
Rated voltage of the main circuit	250 V AC 30 V DC	Up to 250 V AC Up to 30 V DC	250 V AC 30 V DC	250 V AC 30 V DC
Maximum switched voltage [1]	400 V AC 300 V DC	Up to 440 V AC Up to 300 V DC	250 V AC 30 V DC	250 V AC 30 V DC
Material of contacts	AgNi; AgNi + Au; $AgSnO_2$	AgNi; AgNi + Au; $AgSnO_2$	$AgSnO_2$	AgNi; AgNi + Au; $AgSnO_2$
Rated voltage of the control circuit	6-24 V DC 12-240 V AC/DC	5-110 V DC 12-230 V AC	12-24 V DC 24-230 V AC	6-220 V DC 12-230 V AC
Versions complete with receptacle («Relay modules»)	+	+	-	-
Solid-state versions	+	+	-	-
IP67 moisture-proof housing	-	+/-	-	-
Integral LED	+	-	+	+/-
Test button	-	-	+	+/-
Mechanical indicator	-	-	+	+/-

Note:
[1] The curves of dependence of the switching current on the voltage level and current type are given in the operating manual.

Series advantages

The devices can be ordered both as assembled relay modules sold under a single code and self-assembly components, which provides flexible configuration and inventory optimization.

The relay receptacles are available in screw, spring and plug-in terminals allowing the solution exactly according to the customer's needs.

The operating temperature range of the relay is from -40 to +85 °C, which allows the use of equipment in automation solutions without the installation of heating or air conditioning systems.

All RP46 series relays as well as the individual RP55 series versions have an integrated test button for manual contact closure, which speeds up and simplifies the commissioning procedure.

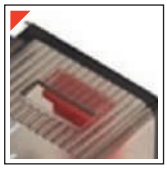

Most relay RP55 versions and all relays RP46 have a mechanical contact status indicator, which makes it possible to quickly determine the mode of operation, even in case of emergency modes.

Relays are available in three versions, depending on the material of the contact groups - for exact correspondence to the type and parameters of the load, to increase the service life, the possibility of switching small currents or for inductive loads with inrush currents.

All relay series have very compact dimensions, with the ultrathin series models having a housing width of only 6 mm, allowing a large number of relays to be installed in a single row of limited width.

The RP40 and RP41 miniature relay series include special IP67 waterproof versions that allow the equipment to be used in aggressive environments without risk of damaging the contacts.

Ultrafine relay modules RM38, receptacles RR93 for relays RP34, relays RP46 as well as individual version of relays RP55 have a LED indicator to display the operating mode state.

The possibility to install additional modules such as variable resistors, LEDs, bypass diodes or resistance capacitance networks allows to implement the solution according to the requirements of the design documentation, specific application and tasks to be solved.

OptiRel G RP34 Ultrafine interface relays and OptiRel G RM38 Relay modules

The RP34 series ultrafine interface relays and RM38 series relay modules are the most compact solutions in the OptiRel G range, as they have a housing width of just 6 mm, allowing a large number of relays to be installed in a single row of limited width.
The devices of this series are mainly used to amplify and convert signals between sensors/actuators and PLCs, mechanisms or fieldbuses and to provide electrical isolation of these sensitive electronic devices.
The series range includes electromechanical and solid-state relays RM34 as well as assembled relay modules RM38.
Electromechanical relays RP34 are available in three versions, depending on the type of contact material — AgNi for general industrial applications; AgNi+Au for switching ultra-low currents and AgSnO2 for inductive loads and loads with inrush currents.
All receptacles RR93 for this series, which are available with both screw and spring terminals, have a built-in LED to indicate the mode of operation.

Selection guide

Device type	Relay modules RM38	Ultrafine interface relays RP34	Ultrafine solid-state interface relays RP34	Receptacles RR93 for relays RP34
Appearance				
Number of contacts	1 CO	1 CO; 1 NO	1 NO	–
Rated current of the main circuit at the rated voltage, A	6 A	6 A	0,1; 1; 3 A	6 A
Rated voltage of the main circuit	250 V AC 30 V DC	250 V AC 30 V DC	24; 48 V DC 230 V AC	250 V
Maximum switched voltage [1]	400 V AC 300 V DC	400 V AC 300 V DC	24; 48 V DC 230 V AC	400 V
Material of contacts	AgNi	AgNi; AgNi + Au; $AgSnO_2$	Транзистор; симистор; МОП-транзистор	–
Rated voltage of the control circuit	6; 12; 24 V DC 12; 24; 48; 110-125; 220-240 V AC/DC	6; 12; 24; 48; 60 V DC [2]	6; 12; 24; 60 V DC [2]	6-24 V DC 12-24; 48-60; 110-125; 220-240 V AC/DC

Note:
[1] The curves of dependence of the switching current on the voltage level and current type are given in the operating manual.
[2] The 110-125 V AC/DC and 220-240 V AC/DC receptacles contain circuitry to convert and step down the supply voltage to 60 V DC

OptiRel G RM38 Relay modules

Designation

OptiRel G RM 38 - 5 1 - 24 D - 6 - V - CO - G

(1) (2) (3) (4) (5) (6) (7) (8) (9) (10) (11)

1	Product range name	OptiRel G						
2	Product type name	RM — Relay module						
3	Series	38						
4	Configuration	5 — electromechanical, with screw terminals			6 — electromechanical with spring terminals			
5	Number of groups of main circuit contacts	1						
6	Rated supply voltage, V	6	12	24	48	60	110–125	220–240
7	Type of power supply circuit current	(empty) — alternative current AC; D — direct current DC; U — general-purpose current AC/DC						
8	Rated current of the main circuit, A	6						
9	Type of connecting terminals	P — spring terminal			V — screw terminal			
10	Type of main contacts	CO — changeover contact						
11	Material of contacts	(empty) — AgNi; S — $AgSnO_2$; G — AgNi + Au						

Items

Appearance	Configuration of contacts	Type of terminals	Rated voltage of the control circuit sockets	Material of contacts	Components		Relay module (assembly)	
					Interposing relay	Relay receptacle	Product name	Code
	1 CO	Screw	6 V DC	AgNi	OptiRel G RP34-51-6D-6-CO	OptiRel G RR93-01-6-24D-6-V	OptiRel G RM38-51-6D-6-V-CO	280986
			12 V DC	AgNi	OptiRel G RP34-51-12D-6-CO	OptiRel G RR93-01-6-24D-6-V	OptiRel G RM38-51-12D-6-V-CO	280987
			12 V AC/DC	AgNi	OptiRel G RP34-51-12D-6-CO	OptiRel G RR93-01-12-24U-6-V	OptiRel G RM38-51-12U-6-V-CO	280978
			12 V AC/DC	$AgSnO_2$	OptiRel G RP34-51-12D-6-CO-S	OptiRel G RR93-01-12-24U-6-V	OptiRel G RM38-51-12U-6-V-CO-S	280979
			24 V DC	AgNi	OptiRel G RP34-51-24D-6-CO	OptiRel G RR93-01-6-24D-6-V	OptiRel G RM38-51-24D-6-V-CO	280988
			24 V DC	AgNi+Au	OptiRel G RP34-51-24D-6-CO-G	OptiRel G RR93-01-6-24D-6-V	OptiRel G RM38-51-24D-6-V-CO-G	280990
			24 V DC	$AgSnO_2$	OptiRel G RP34-51-24D-6-CO-S	OptiRel G RR93-01-6-24D-6-V	OptiRel G RM38-51-24D-6-V-CO-S	280989
			24 V AC/DC	AgNi	OptiRel G RP34-51-24D-6-CO	OptiRel G RR93-01-12-24U-6-V	OptiRel G RM38-51-24U-6-V-CO	280980
			24 V AC/DC	$AgSnO_2$	OptiRel G RP34-51-24D-6-CO-S	OptiRel G RR93-01-12-24U-6-V	OptiRel G RM38-51-24U-6-V-CO-S	280981
			110-125 V AC/DC [1]	AgNi	OptiRel G RP34-51-60D-6-CO	OptiRel G RR93-01-110-125U-6-V	OptiRel G RM38-51-110-125U-6-V-CO	280982
			220-240 V AC/DC [1]	AgNi	OptiRel G RP34-51-60D-6-CO	OptiRel G RR93-01-220-240U-6-V	OptiRel G RM38-51-220-240U-6-V-CO	282945
			220-240 V AC/DC [1]	AgNi+Au	OptiRel G RP34-51-60D-6-CO-G	OptiRel G RR93-01-220-240U-6-V	OptiRel G RM38-51-220-240U-6-V-CO-G	282947
			220-240 V AC/DC [1]	$AgSnO_2$	OptiRel G RP34-51-60D-6-CO-S	OptiRel G RR93-01-220-240U-6-V	OptiRel G RM38-51-220-240U-6-V-CO-S	282946
		Spring terminals	6 V DC	AgNi	OptiRel G RP34-51-6D-6-CO	OptiRel G RR93-51-6-24D-6-P	OptiRel G RM38-61-6D-6-P-CO	280997
			12 V DC	AgNi	OptiRel G RP34-51-12D-6-CO	OptiRel G RR93-51-6-24D-6-P	OptiRel G RM38-61-12D-6-P-CO	280998
			12 V AC/DC	AgNi	OptiRel G RP34-51-12D-6-CO	OptiRel G RR93-51-12-24U-6-P	OptiRel G RM38-61-12U-6-P-CO	280991
			24 V DC	AgNi	OptiRel G RP34-51-24D-6-CO	OptiRel G RR93-51-6-24D-6-P	OptiRel G RM38-61-24D-6-P-CO	282948
			24 V DC	$AgSnO_2$	OptiRel G RP34-51-24D-6-CO-S	OptiRel G RR93-51-6-24D-6-P	OptiRel G RM38-61-24D-6-P-CO-S	282949
			24 V AC/DC	AgNi	OptiRel G RP34-51-24D-6-CO	OptiRel G RR93-51-12-24U-6-P	OptiRel G RM38-61-24U-6-P-CO	280992
			48 V AC/DC	AgNi	OptiRel G RP34-51-48D-6-CO	OptiRel G RR93-51-48-60U-6-P	OptiRel G RM38-61-48U-6-P-CO	280993
			110-125 V AC/DC [1]	AgNi	OptiRel G RP34-51-60D-6-CO	OptiRel G RR93-51-110-125U-6-P	OptiRel G RM38-61-110-125U-6-P-CO	280994
			110-125 V AC/DC [1]	AgNi+Au	OptiRel G RP34-51-60D-6-CO-G	OptiRel G RR93-51-110-125U-6-P	OptiRel G RM38-61-110-125U-6-P-CO-G	280995
			220-240 V AC/DC [1]	AgNi	OptiRel G RP34-51-60D-6-CO	OptiRel G RR93-51-220-240U-6-P	OptiRel G RM38-61-220-240U-6-P-CO	280996

Note:
[1] The 110-125 V AC/DC and 220-240 V AC/DC receptacles contain circuitry to convert and step down the supply voltage to 60 V DC, therefore the relays to be installed should be selected with a 60 V DC control circuit.

Technical specification

Parameter		Value
Contact specifications		
Number of contacts		1 CO
Rated current of the main circuit at the rated voltage, A		6
Main circuit rated voltage, V	- for AC 50 Hz	250
	- for DC	30
Maximum switched voltage B	- for AC 50 Hz	400 [1]
	- for DC	300 [1]
Maximum switching power, V·A/W		1500/180
Material of contacts		AgNi
Trip type		Micro-trip
Minimum switchable load parameters	Standard contacts	5 V DC/ 100 мА
	Gold-plated contacts	5 V DC/ 10 мА
Coil characteristics		
Relay module rated voltage Un, V	DC	6; 12; 24
	AC/DC	12; 24; 48-60; 110-125; 220-240
Rated power, MW	- at rated voltage from 6 up to 24 V	170
	- at rated voltage of 48 V, 60 V	210
Operating voltage range		0,8-1,1 Uн
Trip voltage		0,05 Uн
Technical parameters		
Mechanical durability, cycles		$1x10^7$
Electrical durability at rated AC/DC load for NO contact, at an operating frequency of 600 cycles per hour and a duty factor of 50 % cycles		$6x10^4$
Relay life time, min, cycles		$1x10^7$
Closing/opening time, ms, maximum		8/4
Electrical strength of insulation between coil and contacts, kV		4
Electrical strength of insulation between open contacts, kV		1
Rated value of 1.2/50 μs pulse voltage between coil and contacts of the main circuit, kV	- for NC contacts	4
	- for NO contacts	6
Rated value of 1.2/50 μs between open contacts of the main circuit, kV		1,5
Rated insulation voltage, V		400
Degree of protection from environmental influences		RTII
Protection class as per GOST 14254-2015	on the shell side (for RTII)	IP51
	on the pins side	IP00
Operating conditions		
Operating temperature range, °C	at rated input voltage up to 60 V	-40 to +70
	at rated input voltage above 60 V	-40 to +55
Installation height above sea level without reduction of electrical parameters, max, m		2000
Relative humidity, %		5 to 85
Operating position in space		Arbitrary

Note:
[1] The curves of dependence of the switching current on the voltage level and current type are given in the operating manual.

Overall dimensions (mm)

OptiRel G RM38-51 relay module with screw terminals

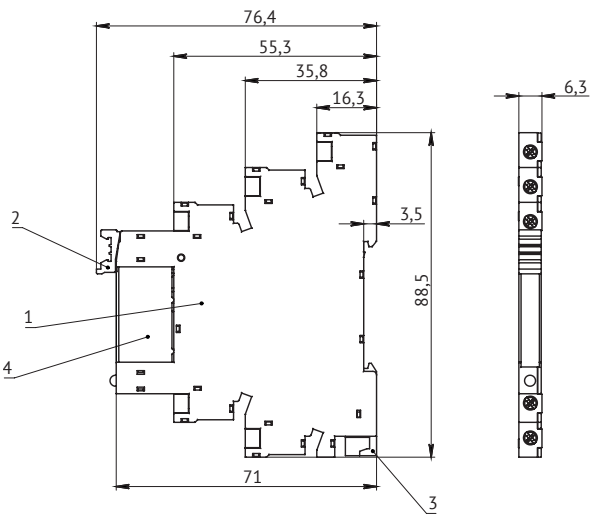

1 — housing; 2 — lock; 3 — latch; 4 — relay

OptiRel G RM38-61 relay module with spring terminals

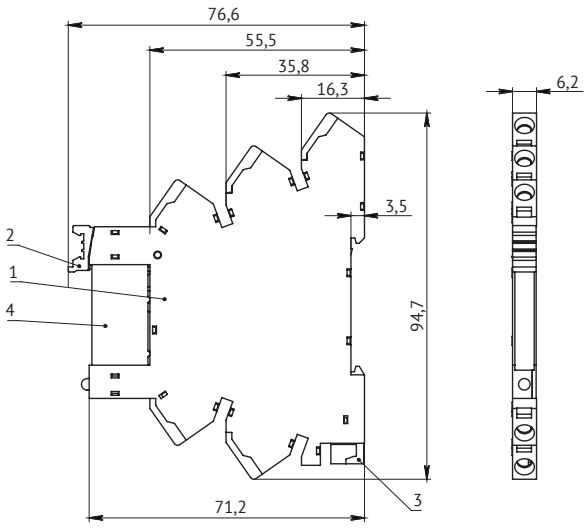

1 — housing; 2 — lock; 3 — latch; 4 — relay

OptiRel G RP34 Ultrafine interface relays

Designation

OptiRel G RP 34 - 5 1 - 60 D - 6 - CO - G

(1) (2) (3) (4) (5) (6) (7) (8) (9) (10)

1	Product range name	OptiRel G
2	Product type name	RP — Ultrafine interposing relay
3	Series	34
4	Configuration	5 — Electromechanical
5	Number of groups of main circuit contacts	1
6	Rated supply voltage, V	6, 12, 24, 48, 60
7	Type of power supply circuit current	D — direct current (DC)
8	Main circuit rated current, A	6
9	Type of main contacts	CO — changeover; NO – normally open
10	Material of contacts	(empty) — AgNi; S — $AgSnO_2$; G — AgNi + Au

Items

Appearance	Configuration of contacts	Control coil rated voltage	Material of contacts	Product name	Code
	1 NO	24 V DC	AgNi	OptiRel G RP34-51-24D-6-NO	281144
		24 V DC	AgNi+Au	OptiRel G RP34-51-24D-6-NO-G	281147
	1 CO	6 V DC	AgNi	OptiRel G RP34-51-6D-6-CO	281140
		6 V DC	AgNi+Au	OptiRel G RP34-51-6D-6-CO-G	281141
		12 V DC	AgNi	OptiRel G RP34-51-12D-6-CO	281142
		24 V DC	AgNi	OptiRel G RP34-51-24D-6-CO	281143
		24 V DC	AgNi+Au	OptiRel G RP34-51-24D-6-CO-G	281146
		24 V DC	$AgSnO_2$	OptiRel G RP34-51-24D-6-CO-S	281145
		48 V DC	AgNi	OptiRel G RP34-51-48D-6-CO	281148
		60 V DC	AgNi	OptiRel G RP34-51-60D-6-CO	281149
		60 V DC	AgNi+Au	OptiRel G RP34-51-60D-6-CO-G	281151
		60 V DC	$AgSnO_2$	OptiRel G RP34-51-60D-6-CO-S	281150

Technical specification

Parameter		Value
Contact specifications		
Number of contacts		1 CO, 1 NO
Rated current of the main circuit at the rated voltage, A		6
Main circuit rated voltage, V	- for AC 50 Hz	250
	- for DC	30
Maximum switched voltage B	- for AC 50 Hz	400 [1)]
	- for DC	300 [1)]
Maximum switching power, V·A/W		1500/180
Material of contacts		AgNi, AgNi + Au, $AgSnO_2$
Trip type		Micro-trip
Minimum switchable load parameters	Standard contacts	5 V DC/ 100 мА
	Gold-plated contacts	5 V DC/ 10 мА
Coil characteristics		
Rated power, MW	- at rated voltage from 6 up to 24 V	170
	- at rated voltage of 48 V, 60 V	210
Operating voltage range		0,8-1,1 Uн
Trip voltage		0,05 Uн
Technical parameters		
Mechanical durability, cycles		$1x10^7$
Electrical durability at rated AC/DC load for NO contact, at an operating frequency of 600 cycles per hour and a duty factor of 50% cycles		$6x10^4$
Relay life time, min, cycles		$1x10^7$
Closing/opening time, ms, maximum		8/4
Electrical strength of insulation between coil and contacts, kV		4
Electrical strength of insulation between open contacts, kV		1
Rated value of 1.2/50 μs pulse voltage between coil and contacts of the main circuit, kV	- for NC contacts	4
	- for NO contacts	6
Rated value of 1.2/50 μs pulse voltage between open contacts of the main circuit, kV		1,5
Rated insulation voltage, V		400
Degree of protection from environmental influences		RTII
Protection class as per GOST 14254-2015	On the shell side	IP51
	On the pins side	IP00
Operating conditions		
Operating temperature range, °C		-40 to +85
Installation height above sea level without reduction of electrical parameters, max, m		2000
Relative humidity, %		5 to 85
Operating position in space		Arbitrary

Note:
[1)] The curves of dependence of the switching current on the voltage level and current type are given in the operating manual.

Overall dimensions (mm)

OptiRel G RP34 relay with 1 CO

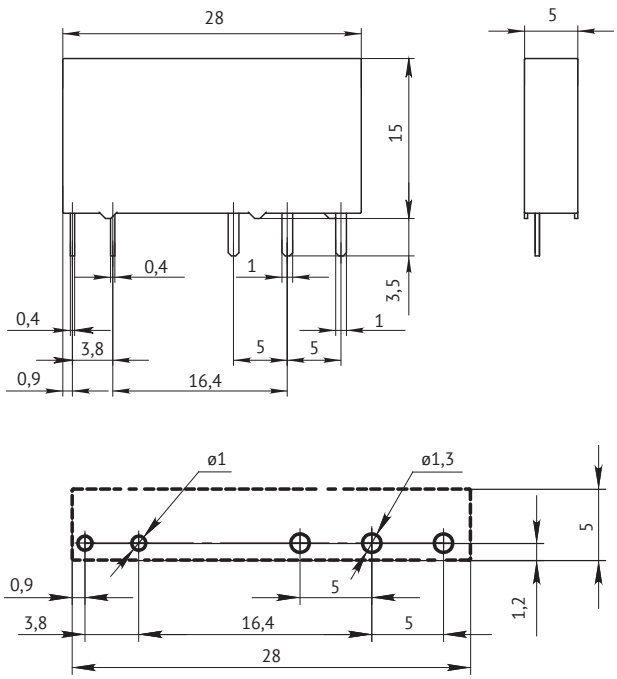

OptiRel G RP34 relay with 1 NO

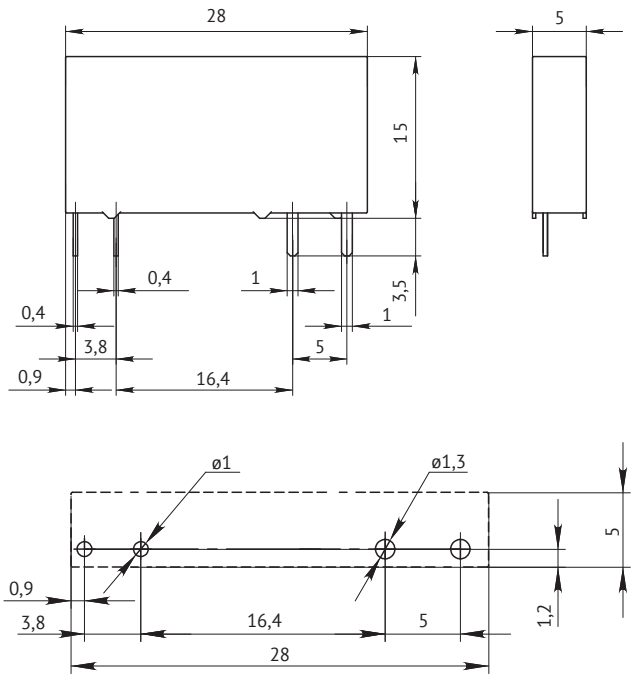

OptiRel G RP34 Ultrafine solid-state interface relays

Designation

OptiRel G RP 34 - 8 1 - 5 D - 3 - M24D

(1) (2) (3) (4) (5) (6) (7) (8) (9)

1	Product range name	OptiRel G
2	Product type name	RP — Ultrafine interposing relay
3	Series	34
4	Configuration	8 — solid-state
5	Number of output circuits	1
6	Rated supply voltage, V	5, 12, 24, 60
7	Type of power supply circuit current	D — direct current (DC)
8	Maximum switching current, A	0,1; 1; 3
9	Electronic key type and switching voltage	M24D — MOSFET, 24 V DC; T48D — transistor, 48 V DC; TC230A — symistor, 230 B AC

Items

Appearance	Output configuration	Control coil rated voltage	Switching voltage and current	Product name	Code
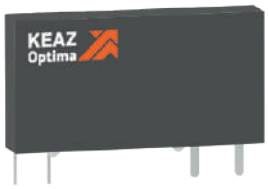	1 NO, transistor	24 V DC	48 V DC / 0,1 A	OptiRel G RP34-81-24D-01-T48D	365468
		60 V DC	48 V DC / 0,1 A	OptiRel G RP34-81-60D-01-T48D	365469
	1 NO, MOSFET	5 B DC	24 V DC / 3 A	OptiRel G RP34-81-5D-3-M24D	365470
		12 V DC	24 V DC / 3 A	OptiRel G RP34-81-12D-3-M24D	365471
		24 V DC	24 V DC / 3 A	OptiRel G RP34-81-24D-3-M24D	365472
		60 V DC	24 V DC / 3 A	OptiRel G RP34-81-60D-3-M24D	365473
	1 NO, symistor	24 V DC	230 B AC / 1 A	OptiRel G RP34-81-24D-1-TC230A	365474

Technical specification

Parameter		Values						
Relay type		OptiRel G RP34-81-24D-01-T48D	OptiRel G RP34-81-60D-01-T48D	OptiRel G RP34-81-24D-1-TC230A	OptiRel G RP34-81-5D-3-M24D	OptiRel G RP34-81-12D-3-M24D	OptiRel G RP34-81-24D-3-M24D	OptiRel G RP34-81-60D-3-M24D
Rated load current, A		0,1		1	3			
Rated voltage of the control circuit, B		24 DC	60 DC	24 DC	5 DC	12 DC	24 DC	60 DC
Rated switching voltage, V		48 DC		220 AC	24 DC			
Input	Operating voltage range, V DC	19,2-28,8	48-72	19,2-28,8	4-6	9,6-14,4	19,2-28,8	48-72
	Trip-on voltage, V DC	19,2	48	19,2	4	9,6	19,2	48
	Trip-off voltage, V DC	10	20	2	1	3	10	20
Output	RMS current in closed state, A	0,1		10	3			
	Pulse current (10 ms), A	0,5		0,25	15			
	Peak voltage in closed state, V DC	48		75 AC – 264 AC	33			
Electrical parameters								
Maximum current of the control circuit, mA		12						
Voltage drop in closed state, V		1,5		5	0,2			
Output leakage current in the off state, μA		20						
Make time, ms		0,4		10	0,4			
Break time, ms		0,6		10	0,6			
Rated voltage of insulation between input and output, kV		2,5						
Protection class as per GOST 14254-2015		IP67						
Operating conditions								
Ambient temperature, °C		-30 to + 60						
Height of the installation site above sea level, max., m		2000						
Operating position in space		Arbitrary						

Overall dimensions (mm)

OptiRel G RP34 solid-state output relay

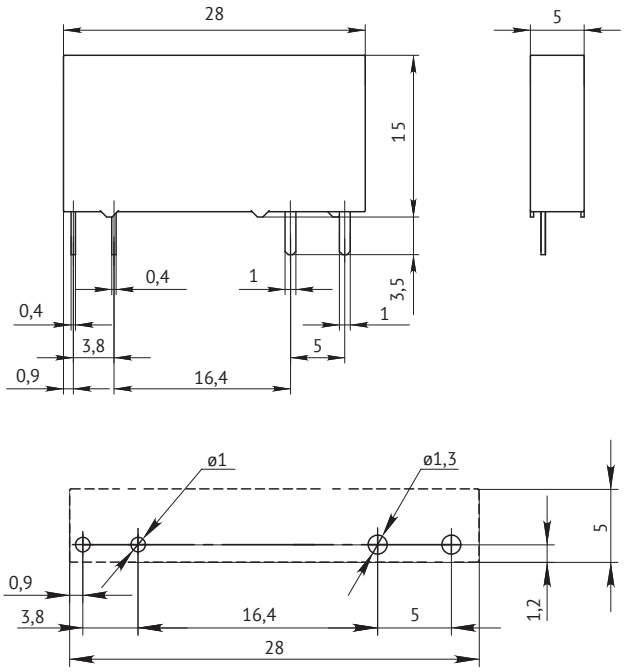

OptiRel G RR93 OptiRel RP34 relay receptacles

Designation

OptiRel G RR 93 - 5 1 - V 220-240 U - 6 - P

(1) (2) (3) (4) (5) (6) (7) (8) (9) (10)

1	Product range name	OptiRel G	
2	Product type name	RR — Relay receptacle	
3	Series	93	
4	Configuration	0 — screw terminals; 5 — spring terminals	
5	Number of groups of main circuit contacts	1	
6	Availability of a VDR in the control circuit	(empty) — no; V — yes	
7	Rated supply voltage, V	6–24; 12–24; 48–60; 110–125; 220–240	
8	Type of power supply circuit current	D — direct current (DC)	U — versatile AC/DC voltage
9	Main circuit rated current, A	6	
10	Type of connecting terminals	P — spring terminals	V — screw terminal

Items

Appearance	Type of terminals	Rated voltage of the receptacle power supply circuit	Control coil voltage of mounted relay	Built-in VDR	Product name	Code
	Screw	6-24 V DC	6-24 V DC	-	OptiRel G RR93-01-6-24D-6-V	281157
		12-24 V AC/DC	12-24 V DC	-	OptiRel G RR93-01-12-24U-6-V	281155
		12-24 V AC/DC	12-24 V DC	+	OptiRel G RR93-01-12-V24U-6-V	365464
		48-60 V AC/DC	48-60 V DC	-	OptiRel G RR93-01-48-60U-6-V	281156
		48-60 V AC/DC	48-60 V DC	+	OptiRel G RR93-01-48-V60U-6-V	365465
		110-125 V AC/DC [1]	60 V DC [1]	-	OptiRel G RR93-01-110-125U-6-V	281161
		220-240 V AC/DC [1]	60 V DC [1]	-	OptiRel G RR93-01-220-240U-6-V	281162
	Spring terminals	6-24 V DC	6-24 V DC	-	OptiRel G RR93-51-6-24D-6-P	281160
		12-24 V AC/DC	12-24 V DC	-	OptiRel G RR93-51-12-24U-6-P	281158
		12-24 V AC/DC	12-24 V DC	+	OptiRel G RR93-51-12-V24U-6-P	365466
		48-60 V AC/DC	48-60 V DC	-	OptiRel G RR93-51-48-60U-6-P	281159
		48-60 V AC/DC	48-60 V DC	+	OptiRel G RR93-51-48-V60U-6-P	365467
		110-125 V AC/DC [1]	60 V DC [1]	-	OptiRel G RR93-51-110-125U-6-P	330085
		220-240 V AC/DC [1]	60 V DC [1]	-	OptiRel G RR93-51-220-240U-6-P	281163

Note:
[1] The 110-125 V AC/DC and 220-240 V AC/DC receptacles contain circuitry to convert and step down the supply voltage to 60 V DC, therefore the relays to be installed should be selected with a 60 V DC control circuit.

Technical specification

Parameter		Values
Technical parameters		
Rated current of the main circuit, A		6
Main circuit rated voltage, V		250
Power supply voltage		6-24 V DC 12-24 V AC/DC 48-60 V AC/DC 110-125 V AC/DC 220-240 V AC/DC
Maximum wire size, solid wire and stranded wire, mm²	- for screw clamp receptacles	1x2,5
	- for spring clamp receptacles	1x1,5
Screw torque, N·m		0,5
Cable stripping length, mm		8÷10
Electrical strength of insulation between control and main circuit connection pins, kV		4
Protection class as per GOST 14254		IP20
Operating conditions		
Operating temperature range, °C	Versions for voltages up to 60 V	-40 to +70
	Versions for voltages above 60 V	-40 to +55
Height of the installation site above sea level, max., m		2000
Relative humidity, %		5 to 85
Operating position in space		Arbitrary

Overall dimensions (mm)

OptiRel G RR93-01 receptacle with screw terminals

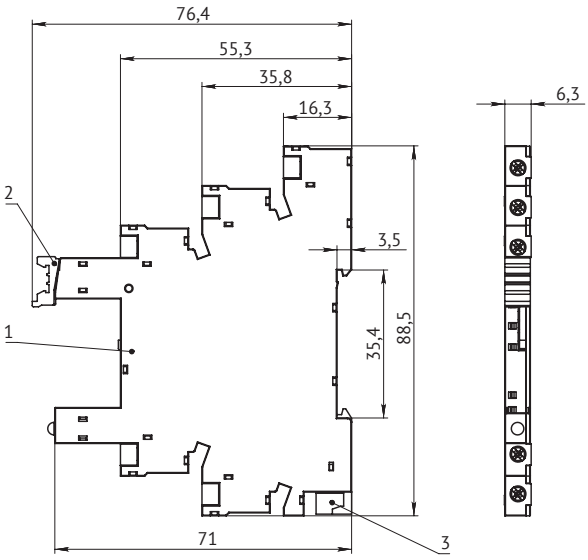

1 — housing; 2 — lock; 3 — latch

OptiRel G RR93-51 receptacle with spring terminals

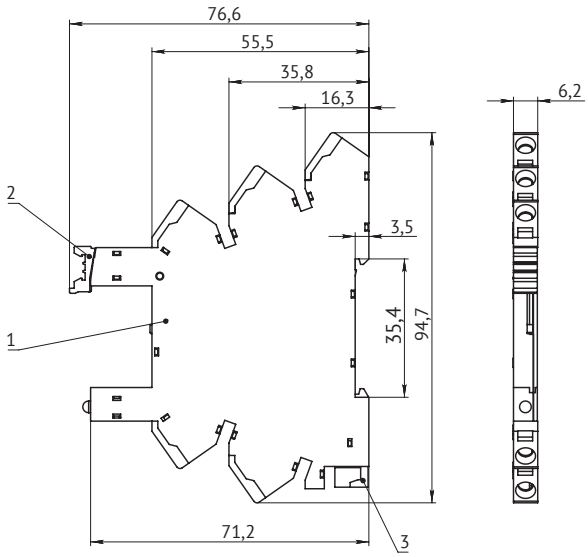

1 — housing; 2 — lock; 3 — latch

Accessories

	Description	Product name	Code
	Relay groups plastic spacer	OptiRel G 93-01	281152
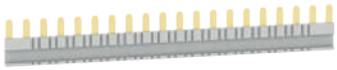	20-pole busbar for receptacles	OptiRel G 93-20	281153
	Marking plate for relays	OptiRel G 93-64	281154

OptiRel G RP40, RP41 Miniature relays and OptiRel G RM48 Relay modules

RP40, RP41 miniature relays and RM48 relay modules are the most popular series of OptiRel G relays, which are characterized by the highest switching loads in the relay range, compact dimensions and availability of versions with ingress protection rating IP67.
The relays of this series are widely used in control and automation solutions and provide reliable galvanic isolation of circuits.
The range includes RP40 electromechanical relays, RP41 advanced performance models, RP41 MOSFET based solid-state relays and assembled RM48 relay modules.
RP40 and RP41 electromechanical relays are available in three versions, depending on the type of contact material - AgNi for general industrial applications; AgNi+Au for switching ultra-low currents and AgSnO2 for inductive loads and loads with inrush currents.
RR95 receptacles for this series are available with screw, spring and plug-in terminals, allowing the implementation of a solution according to the customer's needs.
Additional plug-in modules can be installed to extend the relay functionality.

Selection guide

Device type	RM48 relay modules	RP40 miniature relays	RP41 advanced miniature relays	RP41 miniature solid-state relays	RR95 receptacles for RP40 and RP41 relays
Appearance					
Number of contacts	1 CO; 2 CO	1 CO; 2 CO; 1 NO; 2 NO	1 CO; 2 CO; 1 NO	1 NO	–
Rated current of the main circuit at the rated voltage, A	10; 16 A	10; 16 A	8; 12; 16 A	5 A	10 A
Rated voltage of the main circuit	250 V AC 30 V DC	250 V AC 30 V DC	250 V AC 24 V DC	24 V DC	250 B
Maximum switched voltage [1]	277 V AC 30 V DC	250 V AC 30 V DC	440 V AC 300 V DC	24 V DC	440 B
Material of contacts	AgNi; AgNi + Au; $AgSnO_2$	AgNi; AgNi + Au; $AgSnO_2$	AgNi; AgNi + Au; $AgSnO_2$	MOSFET	–
Rated voltage of the control circuit	12; 24 V DC	5; 6; 12; 24; 48; 60 V DC	5; 6; 12; 24; 48; 60; 110 V DC 24; 110; 230 V AC	5; 12; 24; 60 V DC	5-230 V AC/DC

Note:
[1] The curves of dependence of the switching current on the voltage level and current type are given in the operating manual.

OptiRel G RM48 Relay modules

Designation

OptiRel G RM 48 - 6 1 - 24 D - 16 - V - CO - S

(1) (2) (3) (4) (5) (6) (7) (8) (9) (10) (11)

1	Product range name	OptiRel G
2	Product type name	RM — Relay modules
3	Series	48
4	Configuration	5 — electromechanical, only for models with 2 output contacts; 6 — electromechanical, only for models with 1 output contact
5	Number of groups of main circuit contacts	1; 2
6	Rated supply voltage, V	12; 24
7	Type of power supply circuit current	D — direct current (DC)
8	Rated current of the main circuit, A	10; 16
9	Type of connecting terminals	V — screw terminal
10	Type of main contacts	CO — changeover contact
11	Material of contacts	(empty) — AgNi; S — $AgSnO_2$; G — AgNi + Au

Items

Appearance	Configuration of contacts	Type of terminals	Control coil rated voltage розетки [1]	Material of contacts	Components		Relay module (assembly)	Code
					Interposing relay	Relay receptacle		
	1 CO	Screw	24 V DC	$AgSnO_2$	OptiRel G RP40-61-24D-16-CO-S	OptiRel G RR95-02-230-10-V	OptiRel G RM48-61-24D-16-V-CO-S	283586
	2 CO		12 V DC	AgNi	OptiRel G RP40-52-12D-10-CO	OptiRel G RR95-02-230-10-V	OptiRel G RM48-52-12D-10-V-CO	281001
			24 V DC	AgNi	OptiRel G RP40-52-24D-10-CO	OptiRel G RR95-02-230-10-V	OptiRel G RM48-52-24D-10-V-CO	281002
			24 V DC	AgNi+Au	OptiRel G RP40-52-24D-10-CO-G	OptiRel G RR95-02-230-10-V	OptiRel G RM48-52-24D-10-V-CO-G	281003

Technical specification

Parameter		Values	
Contact specifications			
Number of contacts		1 CO	2 CO
Rated current of the main circuit, A	- 250 V AC, 50 Hz	16 [1]	10
	- 30 V DC	16 [1]	8
Main circuit rated voltage, V	- for AC 50 Hz	240	250
	- for DC	24	30
Maximum switched voltage, B	- for AC 50 Hz	277 [2]	250 [2]
	- for DC	30 [2]	30 [2]
Maximum switching power, V·A/W		5540/480	2500/240
Material of contacts		$AgSnO_2$	AgNi, AgNi+Au
Trip type		Micro-trip	Micro-trip
Minimum switchable load parameters	Standard contacts	5 V DC/ 100 мА	
	Gold-plated contacts	5 V DC/ 10 мА	
Coil characteristics			
Rated voltage Un/resistance at 23 °C		24 V DC/ 1100 Ом ± 10%	12 V DC/275 Ом ± 10% 24 V DC/1100 Ом ± 10%
Rated power, MW		530	530
Technical parameters			
Operating voltage range		0,8-1,1 Uн	
Dropout voltage		0,1 Uн	
Mechanical durability, cycles		$1x10^7$	
Electrical durability at rated load, cycles	- for NO and NC type contacts at 250 V AC (COS φ=1)	$1x10^5$	$1x10^5$
	- for NO and NC type contacts at 30 V DC	-	$1x10^5$
	- for NO and NC type contacts at 24 V DC	$5x10^4$	-
Relay life time, min, cycles		$1x10^7$	
Closing/opening time, ms, maximum		15/10	
Electrical strength of insulation between main and control circuit pins, kV		4	
Electrical strength of insulation between open contacts, kV		1	
Rated value of 1.2/50 μs withstand pulse voltage between main and control circuit contacts, kV		4	10
Rated value of 1.2/50 μs withstand pulse voltage between open contacts of the main circuit, kV		1,5	
Protection class as per GOST 14254		IP20	
Operating conditions			
Operating temperature range, °C		-40 to +70	
Installation height above sea level without reduction of electrical parameters, max, m		2000	
Relative humidity, %		5 to 85	
Operating position in space		Arbitrary	

Note:
[1] For currents over 10 A, terminals should be connected in parallel (21 with 11, 24 with 14, 22 with 12)
[2] The curves of dependence of the switching current on the voltage level and current type are given in the operating manual.

Overall dimensions (mm)

OptiRel G RM48 relay module

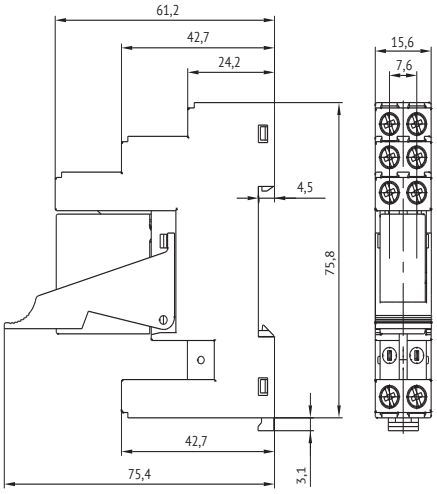

OptiRel G RP40 Miniature relays

Designation

OptiRel G RP 40 - 5 2 - 12 D - 10 - CO - G / W

(1) (2) (3) (4) (5) (6) (7) (8) (9) (10) (11)

1	Product range name	OptiRel G
2	Product type name	RP — Interposing relay
3	Series	40
4	Configuration	5 — electromechanical, only for models with 2 output contacts; 6 — electromechanical, only for models with 1 output contact
5	Number of groups of main circuit contacts	1; 2
6	Rated supply voltage, V	5; 6; 12; 24; 48; 60
7	Type of power supply circuit current	D — direct current (DC)
8	Rated current of the main circuit, A	10; 16
9	Type of main contacts	CO — changeover; NO — normally open
10	Material of contacts	(empty) — AgNi; S — $AgSnO_2$; G — AgNi + Au
11	Moisture-proof housing	W — available; (empty) — AgNi

Items

Appearance	Configuration of contacts	Control coil rated voltage	Material of contacts	Product name	Code
	1 NO	24 V DC	$AgSnO_2$	OptiRel G RP40-61-24D-16-NO-S	281037
	2 NO	24 V DC	AgNi	OptiRel G RP40-52-24D-10-NO/W [1]	281024
	1 CO	12 V DC	$AgSnO_2$	OptiRel G RP40-61-12D-16-CO-S	281038
		24 V DC	$AgSnO_2$	OptiRel G RP40-61-24D-16-CO-S	281036
	2 CO	5 V DC	AgNi	OptiRel G RP40-52-5D-10-CO	281016
		6 V DC	AgNi	OptiRel G RP40-52-6D-10-CO	281023
		12 V DC	AgNi	OptiRel G RP40-52-12D-10-CO	281017
		12 V DC	AgNi	OptiRel G RP40-52-12D-10-CO/W [1]	281018
		24 V DC	AgNi	OptiRel G RP40-52-24D-10-CO	281019
		24 V DC	AgNi+Au	OptiRel G RP40-52-24D-10-CO-G	281021
		24 V DC	AgNi	OptiRel G RP40-52-24D-10-CO-W [1]	281020
		48 V DC	AgNi	OptiRel G RP40-52-48D-10-CO	281028
		60 V DC	AgNi	OptiRel G RP40-52-60D-10-CO	281029
		60 V DC	AgNi	OptiRel G RP40-52-60D-10-CO/W [1]	281022
		60 V DC	AgNi+Au	OptiRel G RP40-52-60D-10-CO-G	281031

Note:
[1] Ingress protection rating IP67 models.

Technical specification

Parameter		Values
Contact specifications		
Number of contacts		2 CO
Rated current of the main circuit, A	- 250 V AC, 50 Hz	10
	- 30 V DC	8
Main circuit rated voltage, V	- for AC 50 Hz	250
	- for DC	30
Maximum switched voltage, B	- for AC 50 Hz	250 [1)]
	- for DC	30 [1)]
Maximum switching power, V·A/W		2500/240
Material of contacts		AgNi, AgNi + Au
Trip type		Micro-trip
Minimum switchable load parameters	Standard contacts	5 B DC/ 100 мA
	Gold-plated contacts	5 B DC/ 10 мA
Coil characteristics		
Rated power, MW		530
Operating voltage range		0,8-1,1 Uн
Maximum voltage, V		1,5 Uн
Dropout voltage		0,05 Uн
Technical parameters		
Mechanical durability, cycles		$1x10^7$
Electrical durability at rated load, cycles at a frequency 360 k/h and 10% work factor		$1x10^5$
Closing/opening time, ms, maximum		15/5
Electrical strength of insulation between main and control circuit contacts, kV		5
Relay life time, min, cycles		$1x10^7$
Electrical strength of insulation between open contacts of the main circuits,kV		1
Rated value of 1.2/50 μs withstand pulse voltage between main and control circuit contacts, kV		10
Rated value of 1.2/50 μs withstand pulse voltage between open contacts of the main circuit, kV		1
Rated value of 1.2/50 μs withstand pulse voltage between contact groups of the main circuit, kV		4
Rated insulation voltage, V		250
Degree of protection from environmental influences		RTII; RTIII
Protection class as per GOST 14254	- On the shell side (for standard version)	IP51
	- On the shell side (for moisture-proof version)	IP67
	- On the pins side	IP00
Operating conditions		
Operating temperature range, °C		-40 to +85
Installation height above sea level without reduction of electrical parameters, max, m		2000
Relative humidity, %		5 to 85
Operating position in space		Arbitrary

Note:
[1)] The curves of dependence of the switching current on the voltage level and current type are given in the operating manual.

Overall dimensions (mm)

OptiRel G RP40 relay with 1 CO

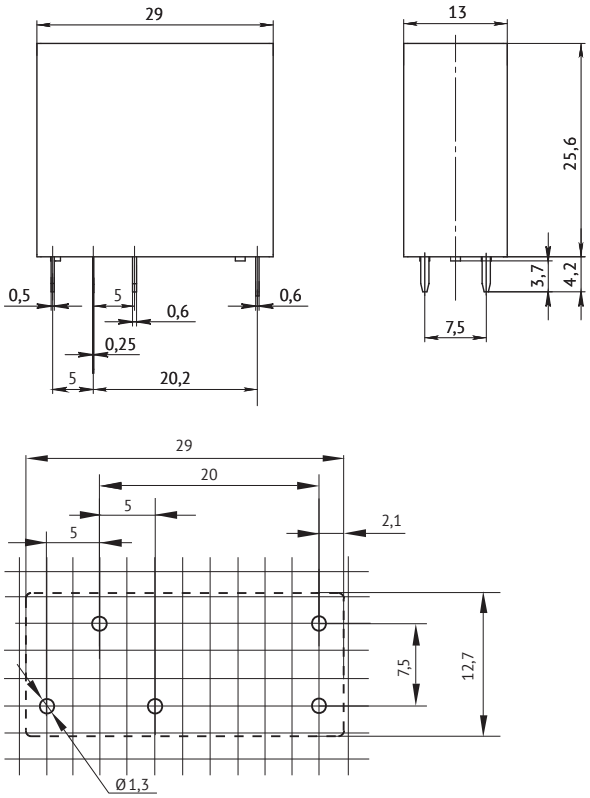

OptiRel G RP40 relay with 2 CO

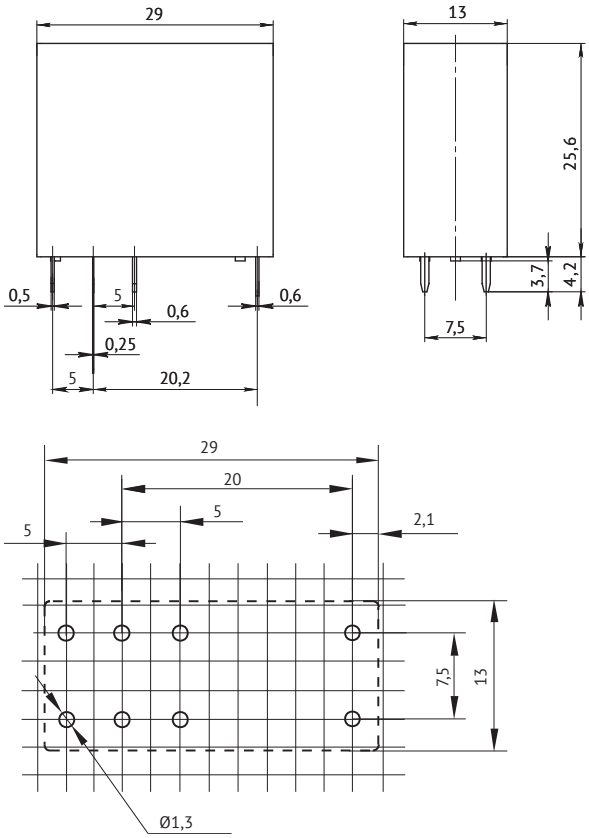

OptiRel G RP40 relay with 1 NO

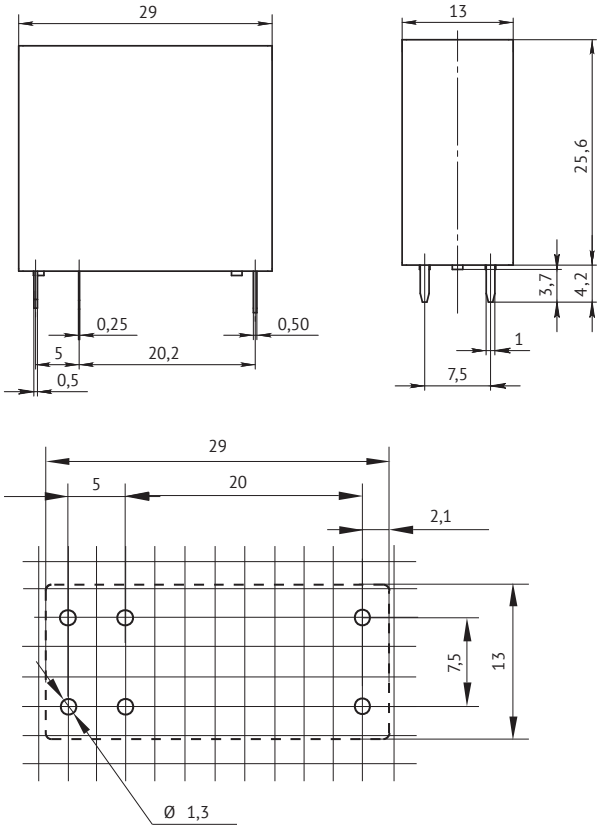

OptiRel G RP41 Advanced miniature relays

Designation

OptiRel G RP 41 - 5 1 - 230 - 12 - CO - G / W

(1) (2) (3) (4) (5) (6) (7) (8) (9) (10) (11)

1	Product range name	OptiRel G	
2	Product type name	RP — Interposing relay	
3	Series	41	
4	Configuration	5 — electromechanical	
5	Number of groups of main circuit contacts	1; 2	
6	Rated supply voltage, V	5; 6; 12; 24; 48; 60; 110; 230	
7	Type of power supply circuit current	D — direct current (DC)	(empty) — alternating current AC
8	Rated current of the main circuit, A	8; 12	
9	Type of main contacts	CO — changeover; NO — normally open	
10	Material of contacts	(empty) — AgNi; S — $AgSnO_2$; G — AgNi + Au	
11	Moisture-proof housing	W — available; (empty) — not available	

Items

Appearance	Configuration of contacts	Control coil rated voltage	Material of contacts	Product name	Code
	1 NO	5 V DC	AgNi	OptiRel G RP41-51-5D-12-NO	281007
	1 CO	6 V DC	AgNi	OptiRel G RP41-51-6D-12-CO	281005
		12 V DC	AgNi	OptiRel G RP41-51-12D-12-CO	281011
		12 V DC	AgNi	OptiRel G RP41-51-12D-16-CO	329971
		24 V AC	AgNi	OptiRel G RP41-51-24-12-CO	281015
		24 V AC	AgNi	OptiRel G RP41-51-24-16-CO	348364
		24 V DC	AgNi	OptiRel G RP41-51-24D-12-CO	281012
		24 V DC	AgNi	OptiRel G RP41-51-24D-12-CO/W [1]	281013
		24 V DC	AgNi+Au	OptiRel G RP41-51-24D-12-CO-G	281014
		24 V DC	AgNi	OptiRel G RP41-51-24D-16-CO	329974
		48 V DC	AgNi	OptiRel G RP41-51-48D-12-CO	281008
		110 V AC	AgNi	OptiRel G RP41-51-110-16-CO	329970
		110 V DC	AgNi	OptiRel G RP41-51-110D-12-CO	281009
		115 V AC	AgNi	OptiRel G RP41-51-115-16-CO	348365
		230 V AC	AgNi	OptiRel G RP41-51-230-12-CO	281010
		230 V AC	AgNi+Au	OptiRel G RP41-51-230-12-CO-G/W [1]	281006
		230 V AC	AgNi	OptiRel G RP41-51-230-16-CO	329972
	2 CO	12 V DC	AgNi	OptiRel G RP41-52-12D-8-CO	281041
		24 V AC	AgNi	OptiRel G RP41-52-24-8-CO	348378
		24 V AC	$AgSnO_2$	OptiRel G RP41-52-24-8-CO-S	348379
		24 V DC	AgNi	OptiRel G RP41-52-24D-8-CO	281042
		24 V DC	AgNi	OptiRel G RP41-52-24D-8-CO/W [1]	281043
		24 V DC	AgNi+Au	OptiRel G RP41-52-24D-8-CO-G	281044
		60 V DC	AgNi	OptiRel G RP41-52-60D-8-CO	281045
		60 V DC	AgNi	OptiRel G RP41-52-60D-8-CO/W [1]	281046
		60 V DC	AgNi+Au	OptiRel G RP41-52-60D-8-CO-G	281047
		110 V DC	AgNi	OptiRel G RP41-52-110D-8-CO	281048
		110 V DC	AgNi	OptiRel G RP41-52-110D-8-CO/W [1]	281049
		230 V AC	AgNi	OptiRel G RP41-52-230-8-CO	324476

Note:
[1] Ingress protection rating IP67 models.

Technical specification

Parameter		Value	
Contact specifications			
Number of contacts		1 CO; 1 NO	2 CO
Rated current of the main circuit at the rated voltage, A:		12 [1]	8
Main circuit rated voltage, V	- for AC 50 Hz	250	
	- for DC	24	
Maximum switched voltage, B	- for AC 50 Hz	440 [2]	
	- for DC	300 [2]	
Maximum switching power, V·A/W		3000/280	2000/192
Material of contacts		AgNi, AgNi + Au, $AgSnO_2$	
Trip type		Micro-trip	
Minimum switchable load parameters	Standard contacts	5 B DC/ 100 мА	
	Gold-plated contacts	5 B DC/ 10 мА	
Coil characteristics			
Rated power, MW/B·A		400/0,75	
Operating voltage range		0,8-1,1 Uн	
AC/DC dropout voltage		0,15 Uн/0,1 Uн	
Technical parameters			
Mechanical durability, cycles	- for DC control coil	$1x10^7$	
	- for AC control coil	$1x10^6$	
Electrical durability at rated load, at 250 V AC (COS φ=1), at an operating frequency of 360 cycles per hour and 10% work factor, cycles		$5x10^4$	
Relay life time, min, cycles	- for DC control coil	$1x10^7$	
	- for AC control coil	$1x10^6$	
Closing/opening time, ms, maximum		15/5	
Electrical strength of insulation between main and control circuit contacts, kV		5	
Electrical strength of insulation between open contacts of the main circuits, kV		1	
Rated value of 1.2/50 μs withstand pulse voltage between main and control circuit contacts, kV		10	
Rated value of 1.2/50 μs withstand pulse voltage between open contacts of the main circuit, kV		1,5	
Rated insulation voltage, V		440	
Degree of protection from environmental influences		RTII; RTIII	
Protection class as per GOST 14254	- On the shell side (for standard version)	IP51	
	- On the shell side (for moisture-proof version)	IP67	
	- On the pins side	IP00	
Operating conditions			
Operating temperature range, °C		-40 to +85	
Height of the installation site above sea level, max., m		2000	
Relative humidity, %		5 to 85	
Operating position in space		Arbitrary	

Note:
[1] At a load current over 10 A, output contact terminals should be connected in parallel (21 with 11, 24 with 14, 22 with 12)
[2] The curves of dependence of the switching current on the voltage level and current type are given in the operating manual.

Overall dimensions (mm)

OptiRel G RP41 relay with 1 CO

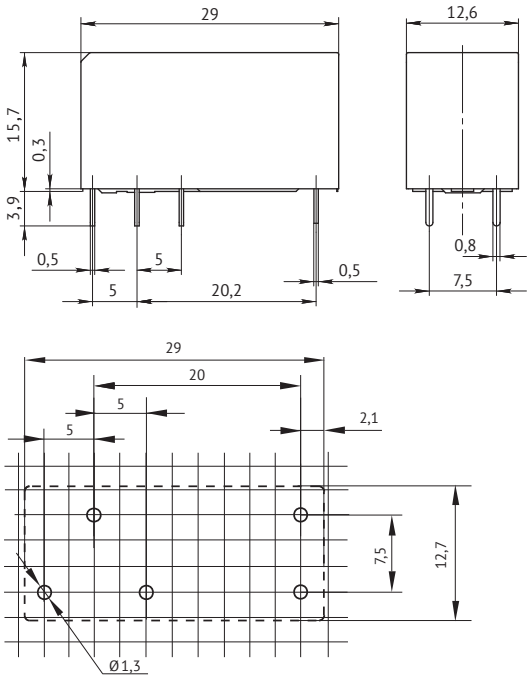

OptiRel G RP41 relay with 2 CO

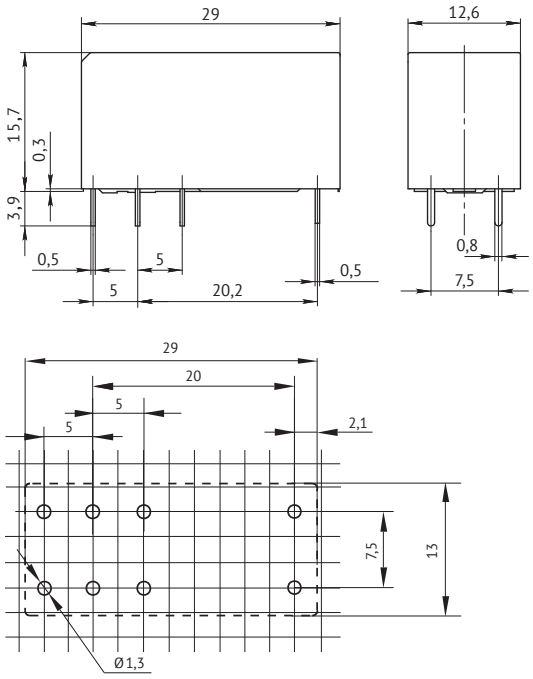

OptiRel G RP41 Miniature solid-state relays

Designation

OptiRel G RP 41 - 8 1 - 5 D - 5 - M24D

(1) (2) (3) (4) (5) (6) (7) (8) (9)

1	Product range name	OptiRel G
2	Product type name	RP — Ultrafine interposing relay
3	Series	41
4	Configuration	8 — solid-state
5	Number of output circuits	1
6	Rated supply voltage, V	5; 12; 24; 60
7	Type of power supply circuit current	D — direct current (DC)
8	Maximum switching current, A	5
9	Electronic key type and switching voltage	M24D — MOSFET, 24 V DC

Items

Appearance	Output configuration	Control coil rated voltage	Switching voltage and current	Product name	Code
	1 NO, MOSFET	5 V DC	24 V DC / 5 A	OptiRel G RP41-81-5D-5-M24D	365475
		12 V DC	24 V DC / 5 A	OptiRel G RP41-81-12D-5-M24D	365476
		24 V DC	24 V DC / 5 A	OptiRel G RP41-81-24D-5-M24D	365477
		60 V DC	24 V DC / 5 A	OptiRel G RP41-81-60D-5-M24D	365478

Technical specification

Parameter		Values			
Rated parameters					
Relay type		OptiRel G RP41-81-5D-M24D	OptiRel G RP41-81-12D-M24D	OptiRel G RP41-81-24D-M24D	OptiRel G RP41-81-60D-M24D
Rated load current, A		5			
Rated voltage of the control circuit, B		5 DC	12 DC	24 DC	60 DC
Rated switching voltage, V		24 DC			
Input	Operating voltage range, V DC	4-6	9,6-14,4	19,2-28,8	48-72
	Trip-on voltage, V DC	4	9,6	19,2	48
	Trip-off voltage, V DC	1	3	10	20
Output	RMS current in closed state, A	5			
	Pulse current (10 ms), A	15			
	Peak voltage in closed state, V DC	33			
Electrical parameters					
Maximum current of the control circuit, mA		12			
Voltage drop in closed state, V		0,2			
Output leakage current in the off state, μA		20			
Make time, ms		0,4			
Break time, ms		0,6			
Rated voltage of insulation between input and output, kV		2,5			
Protection class as per GOST 14254-2015		IP67			
Operating conditions					
Ambient temperature, °C		-30 to + 60			
Height of the installation site above sea level, max., m		2000			
Operating position in space		Arbitrary			

Overall dimensions (mm)

OptiRel G RP41 solid-state output relay

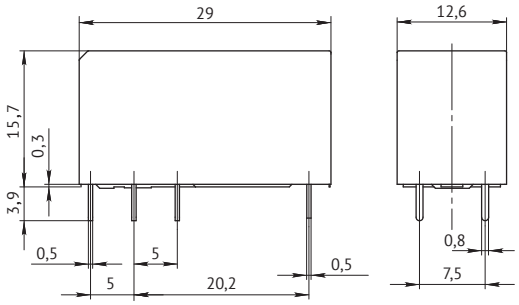

OptiRel G RR95 RP40 and RP41 relay receptacles

Designation

OptiRel G RR 95 - 8 2 - 230 - 10 - V

1	Product range name	OptiRel G
2	Product type name	RR — Relay receptacle
3	Series	95
4	Configuration	0 — screw terminals, logical base; 1 — for PCB mounting by soldering; 5 — spring or plug-in terminals, logical base; 8 — screw terminals, standard base
5	Number of groups of main circuit contacts	2
6	Rated supply voltage, V	230
7	Rated current of the main circuit, A	10
8	Type of connecting terminals	V — screw terminals; P — spring terminals; PI — plug-in terminals; (empty) — PCB mounting by soldering

Items

Appearance	Type of terminals	Base type	Product name [1]	Code	Compatible retainer		
					Material	Product name	Code
	Screw	Standard	OptiRel G RR95-82-230-10-V	281176	Plastic Metal Plastic Metal	OptiRel G 40-H6 [2] OptiRel G 40-H8 [2] OptiRel G 41-H4 [3] OptiRel G 41-H7 [3]	281186 281188 281185 281187
		Logical	OptiRel G RR95-02-230-10-V	281173			
	Spring terminals		OptiRel G RR95-52-230-10-P	281175			
	Plug-in terminals		OptiRel G RR95-52-230-10-PI	365460			
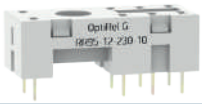	For soldering	–	OptiRel G RR95-12-230-10	281174	Metal	OptiRel G 40-H3 [2] OptiRel G 41-H1 [3]	281184 281183

Note:
[1] For currents above 10 A, the output contacts of the receptacle should be connected in parallel. The wiring diagram can be found in the operating manual.
[2] For RP40 series relays and RM48 relay modules.
[3] For RP41 series relay.

Technical specification

Parameter	Values
Technical parameters	
Rated current of the main circuit, A	10 [1]
Main circuit rated voltage, V	250
Maximum wire size, solid wire and stranded wire, mm2	1x4; 2x2,5
Screw torque, N·m	0,6
Cable stripping length, mm	7
Electrical strength of insulation between control and main circuit connection pins, kV	5
Protection class as per GOST 14254	IP20
Operating conditions	
Operating temperature range	-40 to +70
Height of the installation site above sea level, max., m	2000
Relative humidity, %	5 to 85
Operating position in space	Arbitrary

Note:
[1] At a load current over 10 A, output contact terminals should be connected in parallel (21 with 11, 24 with 14, 22 with 12)

Overall dimensions (mm)

RR95-02 receptacle with screw terminals and logic base

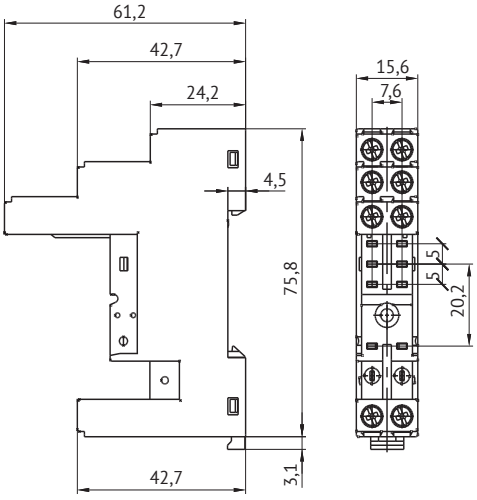

RR95-82 receptacle with screw terminals and standard base

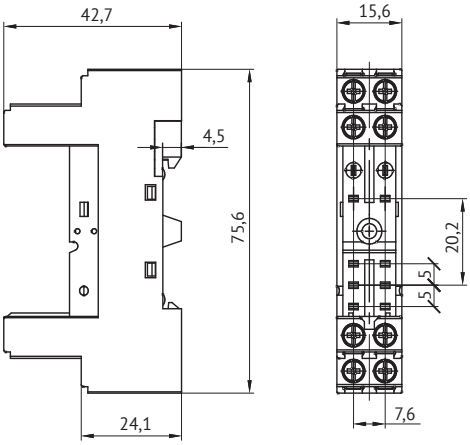

OptiRel G RR95-52 receptacle with spring terminals

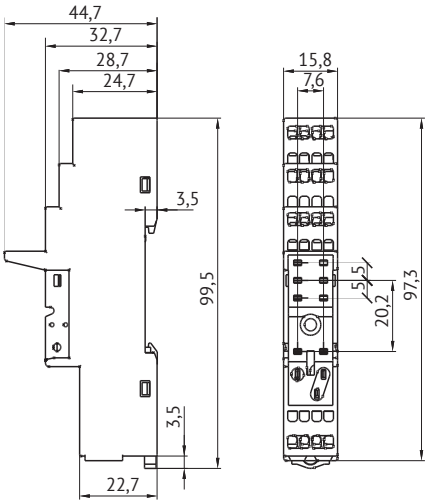

OptiRel G RR95-52 receptacle with plug-in terminals

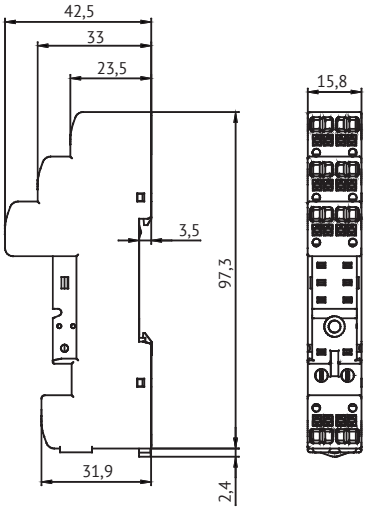

OptiRel G RR95-12 receptacle for PCB mounting by soldering

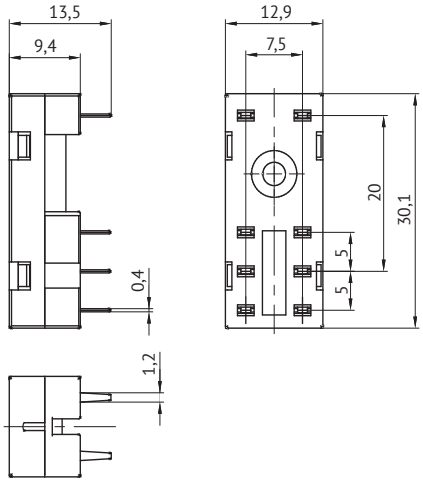

OptiRel G RP46 Industrial relays

RP46 industrial relays are designed for the most difficult switching modes and due to the use of special $AgSnO_2$ alloy contact groups can be used for switching inductive loads and loads with inrush currents.

For ease of operation and commissioning, all RP46 series relays have a built-in test button for manual closure of contacts as standard, which speeds up and simplifies the commissioning procedure, a mechanical indicator to show contact status as well as a LED to indicate the operating mode.

RR97 receptacles for this series are available with screw and plug-in terminals, allowing the implementation of a solution according to the customer's needs.

Selection guide

Device type	RP46 industrial relays	RR97 receptacles for RP46 relays
Appearance		
Number of contacts	1 CO; 2 CO	–
Rated current of the main circuit at the rated voltage, A	8; 12	10
Rated voltage of the main circuit	250 V AC 30 V DC	250 V
Maximum switched voltage [1]	250 V AC 30 V DC	440 V
Material of contacts	$AgSnO_2$	–
Rated voltage of the control circuit	12; 24 V DC 24; 48; 110; 230 V AC	24-230 V AC/DC

Note:
[1] The curves of dependence of the switching current on the voltage level and current type are given in the operating manual.

OptiRel G RP46 Industrial relays

Designation

OptiRel G RP 46 - 5 2 - 12 D - 8 - CO - S / T I L

(1) (2) (3) (4) (5) (6) (7) (8) (9) (10) (11) (12) (13)

1	Product range name	OptiRel G	
2	Product type name	RP — Interposing relay	
3	Series	46	
4	Configuration	5 — electromechanical	
5	Number of groups of main circuit contacts	2	
6	Rated supply voltage, V	12; 24; 48; 110; 230	
7	Type of power supply circuit current	D — direct current (DC)	(empty) — alternating current AC
8	Rated current of the main circuit, A	8	
9	Type of main contacts	CO — changeover contact	
10	Material of contacts	S — $AgSnO_2$	
11	Test button	T — available; (empty) — not available	
12	Mechanical indicator	I — available; (empty) — not available	
13	LED	L — available; (empty) — not available	

Items

Appearance	Configuration of contacts	Control coil rated voltage	Material of contacts	Test button	Mechanical indicator	LED	Product name	Code
	1 CO	24 V DC	$AgSnO_2$	+	+	+	OptiRel G RP46-51-24D-12-CO-S/TIL	324477
		230 V AC	$AgSnO_2$	+	+	+	OptiRel G RP46-51-230-12-CO-S/TIL	324478
	2 CO	12 V DC	$AgSnO_2$	+	+	+	OptiRel G RP46-52-12D-8-CO-S/TIL	281054
		24 V AC	$AgSnO_2$	+	+	+	OptiRel G RP46-52-24-8-CO-S/TIL	281050
		24 V DC	$AgSnO_2$	+	+	+	OptiRel G RP46-52-24D-8-CO-S/TIL	281055
		48 V AC	$AgSnO_2$	+	+	+	OptiRel G RP46-52-48-8-CO-S/TIL	281051
		48 V DC	$AgSnO_2$	+	+	+	OptiRel G RP46-52-48D-8-CO-S/TIL	281056
		110 V AC	$AgSnO_2$	+	+	+	OptiRel G RP46-52-110-8-CO-S/TIL	281052
		110 V DC	$AgSnO_2$	+	+	+	OptiRel G RP46-52-110D-8-CO-S/TIL	281057
		230 V AC	$AgSnO_2$	+	+	+	OptiRel G RP46-52-230-8-CO-S/TIL	281053

Technical specification

Parameter		Values
Contact specifications		
Number of contacts		2 CO
Rated current of the main circuit at the rated voltage, A:		8
Main circuit rated voltage, V	- for AC 50 Hz	250
	- for DC	30
Maximum switched voltage, B	- for AC 50 Hz	250 [1)]
	- for DC	30 [1)]
Maximum switching power, V·A/W		2500/300
Material of contacts		$AgSnO_2$
Trip type		Micro-trip
Minimum switchable load parameters	Standard contacts	5 V DC/ 100 мА
	Gold-plated contacts	5 V DC/ 10 мА
Coil characteristics		
Rated power, MW/BA		530/0,9
Operating voltage range		0,8-1,1 Uн
AC/DC dropout voltage		0,3 Uн/0,1 Uн
Technical parameters		
Mechanical durability, cycles	- for DC control coil	$5x10^7$
	- for AC control coil	$3x10^7$
Electrical durability at rated load, for 8 A 250 V AC /30 V DC NC or NO type contacts, at a frequency of 360 switches per hour and 10% work factor, cycles		$1x10^5$
Relay life time, min, cycles	- for DC control coil	$5x10^7$
	- for AC control coil	$3x10^7$
Closing/opening time, ms, maximum	- for DC control coil	15/10
	- for AC control coil	15/20
Electrical strength of insulation between main and control circuit contacts, kV		5
Electrical strength of insulation between open contacts of the main circuits,kV		1
Rated value of 1.2/50 μs withstand pulse voltage between main and control circuit contacts, kV		6
Rated value of 1.2/50 μs withstand pulse voltage between open contacts of the main circuit, kV		1
Rated value of 1.2/50 μs withstand pulse voltage between contact groups of the main circuit, kV		4
Rated insulation voltage, V		250
Degree of protection from environmental influences		RTII
Protection class as per GOST 14254	- On the shell side	IP51
	- on the pins side	IP00
Operating conditions		
Operating temperature range, °C		-40 to +70
Height of the installation site above sea level, max., m		2000
Relative humidity, %		5 to 85
Operating position in space		Arbitrary

Note:
[1)] The curves of dependence of the switching current on the voltage level and current type are given in the operating manual.

Overall dimensions (mm)

OptiRel G RP46 relay with 2 CO

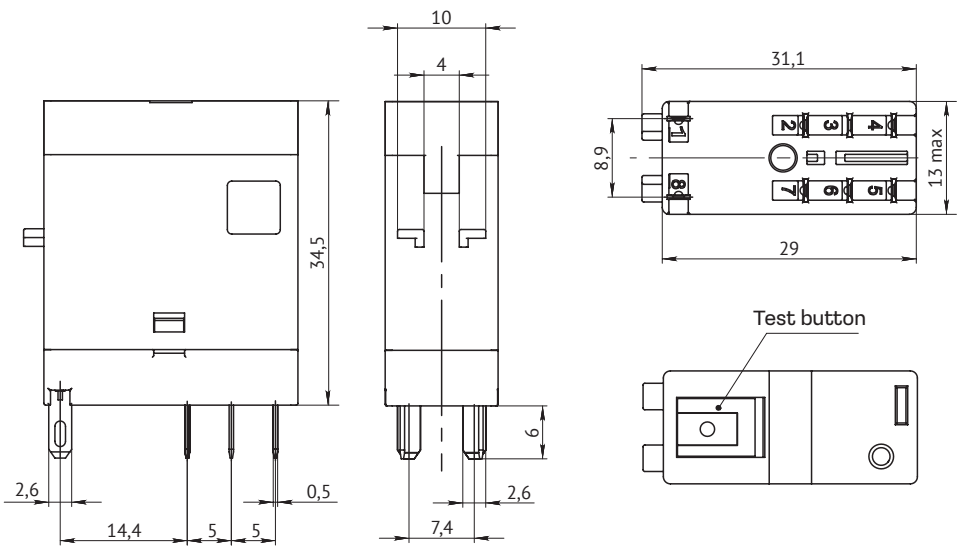

OptiRel G RR97 RP46 relay receptacles

Designation

OptiRel G RR 97 - 7 2 - 230 - 10 - V

(1) (2) (3) (4) (5) (6) (7) (8)

1	Product range name	OptiRel G
2	Product type name	RR — Relay receptacle
3	Series	97
4	Configuration	5 — spring terminals, logical base; 7 — spade lug screw terminals, standard base
5	Number of groups of main circuit contacts	1; 2
6	Rated supply voltage, V	230
7	Rated current of the main circuit, A	10
8	Type of connecting terminals	V — Screw; PI — Plug-in terminals

Items

Appearance	Type of terminals	Base type	Number of relay contacts	Product name	Code	Compatible retainer		
						Material	Product name	Code
	Screw terminals for spade lug	Standard	1 CO	OptiRel G RR97-71-230-12-V	365459	Plastic	OptiRel G 46-H1	281182
		Standard	2 CO	OptiRel G RR97-72-230-10-V	281177			
	Plug-in terminals	Logical	2 CO	OptiRel G RR97-52-230-10-PI	365463			

Technical specification

Parameter	Values
Technical parameters	
Rated current of the main circuit, A	10
Main circuit rated voltage, V	250
Cable stripping length, mm	7
Maximum wire size, solid wire and stranded wire, mm²	1x2,5 2x1,5
Screw torque, N·m	1
Electrical strength of insulation between control and main circuit connection pins, kV	4
Protection class as per GOST 14254	IP10
Operating conditions	
Operating temperature range	40 to +70
Height of the installation site above sea level, max., m	2000
Relative humidity, %	5 to 85
Operating position in space	Arbitrary

Overall dimensions (mm)

OptiRel G RR97 receptacle with screw terminals for 1 CO relays

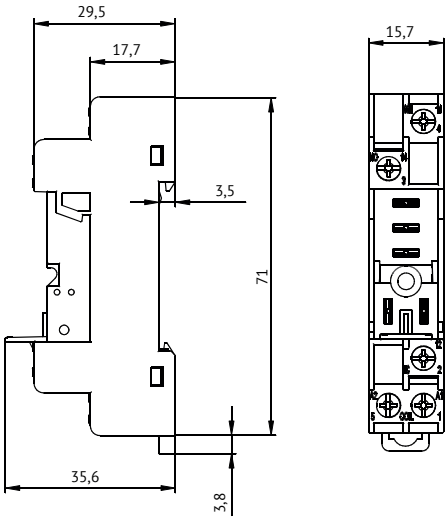

OptiRel G RR97 receptacle with screw terminals for 2 CO relays

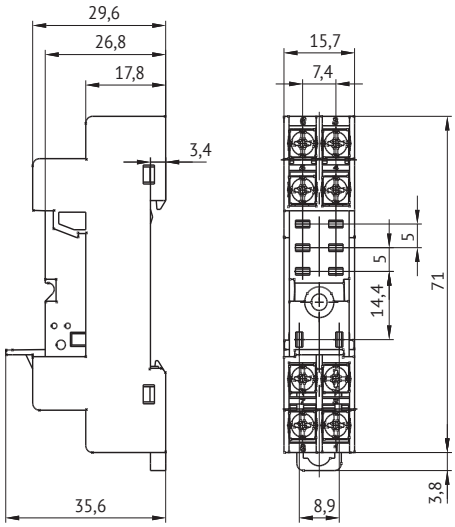

OptiRel G RR97 receptacle with plug-in terminals for 2 CO relays

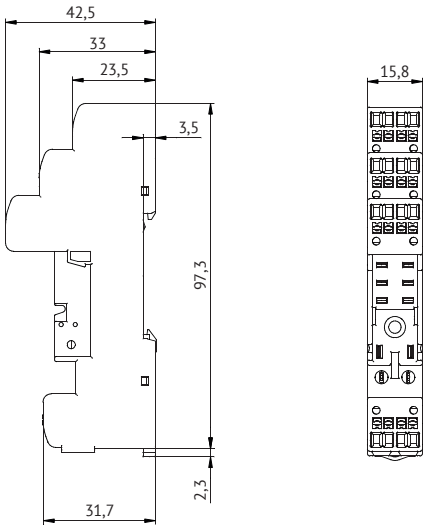

OptiRel G RP55 General-purpose relays

RP55 general-purpose relays offer the widest range of versions of all OptiRel G series and can be used for a variety of applications and automation systems, as well as can provide reliable galvanic isolation of electrical circuits.

The series range is represented by RP55 electromechanical relays, which are available in three versions, depending on the type of contact material — AgNi for general industrial applications; AgNi+Au for switching ultra-low currents and $AgSnO_2$ for inductive loads and loads with inrush currents.

For ease of operation and commissioning, the RP55 series relay range includes versions that have a built-in test button for manual contact closure to speed up and simplify commissioning, a mechanical indicator to show contact status, a LED to indicate operating mode, and a built-in bypass diode for protection against switching overvoltages.

RR95 receptacles for this series are available with screw terminals, spade lug terminals, spring terminals and plug-in terminals, as well as in PCB mount versions, which will allow to implement the exact solution according to the customer's needs.
Additional plug-in modules can be installed to extend the relay functionality.

Selection guide

Device type	RP55 general-purpose relays	RR94 receptacles for RP55 relays
Appearance		
Number of contacts	2 CO; 3 CO; 4 CO	–
Rated current of the main circuit at the rated voltage, A	7; 10; 12 A	6; 7; 10; 12 A
Rated voltage of the main circuit	250 V AC 30 V DC	250 V
Maximum switched voltage [1]	250 V AC 30 V DC	250 V
Material of contacts	AgNi; AgNi + Au; $AgSnO_2$	–
Rated voltage of the control circuit	6; 12; 24; 48; 110; 220 V DC 12; 24; 48; 110; 230 V AC	6-230 V AC/DC

Note:
[1] The curves of dependence of the switching current on the voltage level and current type are given in the operating manual.

OptiRel G RP55 General-purpose relays

Designation

OptiRel G RP 55 - 3 3 - 12 D - 10 - CO - / T I L D

(1) (2) (3) (4) (5) (6) (7) (8) (9) (10) (11) (12) (13) (14)

1	Product range name	OptiRel G	
2	Product type name	RP — Interposing relay	
3	Series	55	
4	Configuration	1 — electromechanical, PCB mount; 3 — electromechanical, receptacle mount	
5	Number of groups of main circuit contacts	2; 3; 4	
6	Rated supply voltage, V	6; 12; 24; 36; 48; 60; 110; 115; 120; 125; 220; 230; 240	
7	Type of power supply circuit current	D — direct current (DC)	(empty) — alternating current AC
8	Rated current of the main circuit, A	6; 10; 12	
9	Type of main contacts	CO — changeover contact	
10	Material of contacts	(empty) — AgNi; S — $AgSnO_2$; G — AgNi + Au	
11	Test button	T — available; (empty) — not available	
12	Mechanical indicator	I — available; (empty) — not available	
13	LED	L — available; (empty) — not available	
14	Bypass diode	D — available; (empty) — not available	

Items

Appearance	Configuration of contacts	Control coil rated voltage	Material of contacts	Test button	Mechanical indicator	LED	Bypass diode	Product name	Code
	2 CO	12 V DC	AgNi	-	-	-	-	OptiRel G RP55-32-12D-12-CO	281072
		24 V AC	AgNi	-	-	-	-	OptiRel G RP55-32-24-12-CO	281063
		24 V AC	AgNi	-	-	+	-	OptiRel G RP55-32-24-12-CO/L	281064
		24 V DC	AgNi	-	-	-	-	OptiRel G RP55-32-24D-12-CO	281073
		24 V DC	AgNi	-	-	+	+	OptiRel G RP55-32-24D-12-CO/LD	281074
		24 V DC	AgNi	+	+	-	-	OptiRel G RP55-32-24D-12-CO/TI	329977
		24 V DC	AgNi	+	+	+	-	OptiRel G RP55-32-24D-12-CO/TIL	329978
		24 V DC	AgNi+Au	+	+	-	-	OptiRel G RP55-32-24D-12-CO-G/TI	281075
		48 V AC	AgNi	+	+	-	-	OptiRel G RP55-32-48-12-CO/TI	281065
		48 V DC	AgNi	+	+	-	-	OptiRel G RP55-32-48D-12-CO/TI	281076
		60 V DC	AgNi	+	+	-	-	OptiRel G RP55-32-60D-12-CO/TI	281077
		110 V AC	AgNi	-	-	-	-	OptiRel G RP55-32-110-12-CO	281066
		110 V AC	AgNi	+	+	+	-	OptiRel G RP55-32-110-12-CO/TIL	281067
		110 V DC	AgNi	-	-	-	-	OptiRel G RP55-32-110D-12-CO	281078
		120 V AC	AgNi	+	+	-	-	OptiRel G RP55-32-120-12-CO/TI	281068
		125 V AC	AgNi	-	-	-	-	OptiRel G RP55-32-125-12-CO	348368
		125 V AC	AgNi	+	+	+	-	OptiRel G RP55-32-125-12-CO/TIL	348369
		125 V DC	AgNi	-	-	-	-	OptiRel G RP55-32-125D-12-CO	348366
		125 V DC	AgNi	+	+	+	-	OptiRel G RP55-32-125D-12-CO/TIL	348367
		220 V DC	AgNi	-	-	-	-	OptiRel G RP55-32-220D-12-CO	281079
		230 V AC	AgNi	+	+	-	-	OptiRel G RP55-32-230-12-CO/TI	329976
		220-240 V AC	AgNi	-	-	-	-	OptiRel G RP55-32-240-12-CO	281069
		220-240 V AC	AgNi	-	-	+	-	OptiRel G RP55-32-240-12-CO/L	281070
		220-240 V AC	AgNi	+	+	-	-	OptiRel G RP55-32-240-12-CO/TI	324480
		220-240 V AC	AgNi	+	+	+	-	OptiRel G RP55-32-240-12-CO/TIL	324479
		220-240 V AC	AgNi+Au	+	+	-	-	OptiRel G RP55-32-240-12-CO-G/TI	281071
	3 CO	12 V AC	AgNi	-	-	+	-	OptiRel G RP55-33-12-10-CO/L	281082
		12 V AC	AgNi	+	+	-	-	OptiRel G RP55-33-12-10-CO/TI	281080
		12 V AC	AgNi+Au	-	-	-	-	OptiRel G RP55-33-12-10-CO-G	281083
		12 V DC	AgNi	-	-	-	-	OptiRel G RP55-33-12D-10-CO	281089
		12 V DC	AgNi	+	+	+	+	OptiRel G RP55-33-12D-10-CO/TILD	281090
		24 V AC	AgNi	-	-	-	-	OptiRel G RP55-33-24-10-CO	281081
		24 V AC	AgNi	+	+	-	-	OptiRel G RP55-33-24-10-CO/TI	329983
		24 V AC	AgNi	+	+	+	-	OptiRel G RP55-33-24-10-CO/TIL	330056
		24 V DC	AgNi	-	-	-	-	OptiRel G RP55-33-24D-10-CO	281091
		24 V DC	AgNi	-	-	+	+	OptiRel G RP55-33-24D-10-CO/LD	281092
		24 V DC	AgNi	+	+	-	-	OptiRel G RP55-33-24D-10-CO/TI	330057

Appearance	Configuration of contacts	Control coil rated voltage	Material of contacts	Test button	Mechanical indicator	LED	Bypass diode	Product name	Code
	3 CO	24 V DC	AgNi	+	+	+	-	OptiRel G RP55-33-24D-10-CO/TIL	330058
		24 V DC	$AgSnO_2$	-	-	-	-	OptiRel G RP55-33-24D-10-CO-S	282951
		24 V DC	$AgSnO_2$	-	-	+	+	OptiRel G RP55-33-24D-10-CO-S/LD	282952
		48 V AC	AgNi	-	-	-	-	OptiRel G RP55-33-48-10-CO	281084
		48 V AC	AgNi	+	+	+	-	OptiRel G RP55-33-48-10-CO/TIL	330059
		48 V DC	AgNi	-	-	-	-	OptiRel G RP55-33-48D-10-CO	281095
		48 V DC	AgNi	+	+	-	-	OptiRel G RP55-33-48D-10-CO/TI	330061
		48 V DC	AgNi	+	+	+	-	OptiRel G RP55-33-48D-10-CO/TIL	330063
		110 V AC	AgNi	-	-	-	-	OptiRel G RP55-33-110-10-CO	281085
		110 V DC	AgNi	-	-	-	-	OptiRel G RP55-33-110D-10-CO	281096
		110 V DC	AgNi	-	-	+	+	OptiRel G RP55-33-110D-10-CO/LD	281097
		120 V AC	AgNi	+	+	-	-	OptiRel G RP55-33-120-10-CO/TI	281086
		120 V AC	AgNi	+	+	+	-	OptiRel G RP55-33-120-10-CO/TIL	329979
		125 V AC	AgNi	-	-	-	-	OptiRel G RP55-33-125-10-CO	348372
		125 V AC	AgNi	+	+	+	-	OptiRel G RP55-33-125-10-CO/TIL	348373
		125 V DC	AgNi	-	-	-	-	OptiRel G RP55-33-125D-10-CO	348370
		125 V DC	AgNi	+	+	-	-	OptiRel G RP55-33-125D-10-CO/TI	348381
		125 V DC	AgNi	+	+	+	-	OptiRel G RP55-33-125D-10-CO/TIL	348371
		220 V DC	AgNi	-	-	-	-	OptiRel G RP55-33-220D-10-CO	281098
		230 V AC	AgNi	+	+	-	-	OptiRel G RP55-33-230-10-CO/TI	329980
		220-240 V AC	AgNi	-	-	-	-	OptiRel G RP55-33-240-10-CO	281087
		220-240 V AC	AgNi	-	-	+	-	OptiRel G RP55-33-240-10-CO/L	281088
		220-240 V AC	AgNi	+	+	+	-	OptiRel G RP55-33-240-10-CO/TIL	329982
	4 CO	6 V DC	AgNi	+	+	+	+	OptiRel G RP55-34-6D-6-CO/TILD	281122
		12 V AC	AgNi	+	+	-	-	OptiRel G RP55-34-12-6-CO/TI	281099
		12 V DC	AgNi	-	-	-	-	OptiRel G RP55-34-12D-6-CO	281123
		12 V DC	AgNi	+	+	-	-	OptiRel G RP55-34-12D-6-CO/TI	330070
		12 V DC	AgNi	+	+	+	-	OptiRel G RP55-34-12D-6-CO/TIL	330071
		12 V DC	AgNi	+	+	+	+	OptiRel G RP55-34-12D-6-CO/TILD	281124
		24 V AC	AgNi	-	-	-	-	OptiRel G RP55-34-24-6-CO	281100
		24 V AC	AgNi	-	+	-	-	OptiRel G RP55-34-24-6-CO/I	281101
		24 V AC	AgNi	-	-	+	-	OptiRel G RP55-34-24-6-CO/L	330081
		24 V AC	AgNi	+	+	-	-	OptiRel G RP55-34-24-6-CO/TI	330082
		24 V AC	AgNi	+	+	+	-	OptiRel G RP55-34-24-6-CO/TIL	281102
		24 V AC	AgNi+Au	+	+	-	-	OptiRel G RP55-34-24-6-CO-G/TI	281103
		24 V AC	AgNi+Au	+	+	+	-	OptiRel G RP55-34-24-6-CO-G/TIL	281104
		24 V DC	AgNi	-	-	-	-	OptiRel G RP55-34-24D-6-CO	281125
		24 V DC	AgNi	-	-	+	+	OptiRel G RP55-34-24D-6-CO/LD	281126
		24 V DC	AgNi	+	+	-	-	OptiRel G RP55-34-24D-6-CO/TI	324484
		24 V DC	AgNi	+	+	+	-	OptiRel G RP55-34-24D-6-CO/TIL	324483
		24 V DC	AgNi+Au	-	-	+	+	OptiRel G RP55-34-24D-6-CO-G/LD	281128
		24 V DC	$AgSnO_2$	+	+	-	-	OptiRel G RP55-34-24D-6-CO-S/TI	282953
		36 V AC	AgNi	-	-	-	-	OptiRel G RP55-34-36-6-CO	281105
		36 V AC	AgNi	+	+	+	-	OptiRel G RP55-34-36-6-CO/TIL	281106
		48 V AC	AgNi	+	+	-	-	OptiRel G RP55-34-48-6-CO/TI	281107
		48 V AC	AgNi	+	+	+	-	OptiRel G RP55-34-48-6-CO/TIL	281108
		48 V DC	AgNi	-	-	-	-	OptiRel G RP55-34-48D-6-CO	281129
		48 V DC	AgNi	+	+	-	-	OptiRel G RP55-34-48D-6-CO/TI	330083
		48 V DC	AgNi	+	+	+	-	OptiRel G RP55-34-48D-6-CO/TIL	330084
		48 V DC	$AgSnO_2$	+	+	-	-	OptiRel G RP55-34-48D-6-CO-S/TI	282954
		60 V AC	AgNi	+	+	-	-	OptiRel G RP55-34-60-6-CO/TI	281109
		60 V DC	AgNi	+	+	-	-	OptiRel G RP55-34-60D-6-CO/TI	281131
		60 V DC	AgNi	+	+	+	+	OptiRel G RP55-34-60D-6-CO/TILD	281132
		110 V AC	AgNi	+	+	-	-	OptiRel G RP55-34-110-6-CO/TI	281110
		110 V AC	AgNi	+	+	+	-	OptiRel G RP55-34-110-6-CO/TIL	281111
		110 V DC	AgNi	-	-	-	-	OptiRel G RP55-34-110D-6-CO	281133
		110 V DC	AgNi	-	+	-	-	OptiRel G RP55-34-110D-6-CO/I	281134
		110 V DC	AgNi	+	+	-	-	OptiRel G RP55-34-110D-6-CO/TI	330065
		110 V DC	AgNi	+	+	+	-	OptiRel G RP55-34-110D-6-CO/TIL	330067
		110 V DC	AgNi	+	+	+	+	OptiRel G RP55-34-110D-6-CO/TILD	281135
		110 V DC	AgNi+Au	+	+	+	+	OptiRel G RP55-34-110D-6-CO-G/TILD	281137
		110 V DC	$AgSnO_2$	+	+	-	-	OptiRel G RP55-34-110D-6-CO-S/TI	282955
		120 V AC	AgNi	+	+	-	-	OptiRel G RP55-34-120-6-CO/TI	281112
		120 V AC	AgNi	+	+	+	-	OptiRel G RP55-34-120-6-CO/TIL	281113
		120 V AC	$AgSnO_2$	+	+	+	-	OptiRel G RP55-34-120-6-CO-S/TIL	281114
		125 V AC	AgNi	-	-	-	-	OptiRel G RP55-34-125-6-CO	348375
		125 V AC	AgNi	+	+	+	-	OptiRel G RP55-34-125-6-CO/TIL	348376
		125 V DC	AgNi	-	-	-	-	OptiRel G RP55-34-125D-6-CO	348374
		125 V DC	AgNi	+	+	+	-	OptiRel G RP55-34-125D-6-CO/TIL	330068
		220 V DC	AgNi	-	-	-	-	OptiRel G RP55-34-220D-6-CO	281138
		220 V DC	AgNi	-	+	-	-	OptiRel G RP55-34-220D-6-CO/I	281139
		220 V DC	AgNi	+	+	-	-	OptiRel G RP55-34-220D-6-CO/TI	330072
		220-240 V AC	AgNi	-	-	-	-	OptiRel G RP55-34-240-6-CO	281115
		220-240 V AC	AgNi	-	+	-	-	OptiRel G RP55-34-240-6-CO/I	281116
		220-240 V AC	AgNi	+	+	-	-	OptiRel G RP55-34-240-6-CO/TI	324482
		220-240 V AC	AgNi	+	+	+	-	OptiRel G RP55-34-240-6-CO/TIL	281117
		220-240 V AC	AgNi+Au	-	-	-	-	OptiRel G RP55-34-240-6-CO-G	281120
		220-240 V AC	AgNi+Au	-	-	+	-	OptiRel G RP55-34-240-6-CO-G/L	281121
		220-240 V AC	$AgSnO_2$	+	+	-	-	OptiRel G RP55-34-240-6-CO-S/TI	281118
		220-240 V AC	$AgSnO_2$	+	+	+	-	OptiRel G RP55-34-240-6-CO-S/TIL	281119
		12 V DC	AgNi	-	-	-	-	OptiRel G RP55-14-12D-6-CO [1)]	281059
		24 V DC	AgNi	-	-	-	-	OptiRel G RP55-14-24D-6-CO [1)]	281060
		24 V DC	$AgSnO_2$	-	-	-	-	OptiRel G RP55-14-24D-6-CO-S [1)]	282950
		110 V DC	AgNi	-	-	-	-	OptiRel G RP55-14-110D-6-CO [1)]	281062
		220-240 V AC	AgNi	-	-	-	-	OptiRel G RP55-14-240-6-CO [1)]	281058

[1)] Models for PCB mounting by soldering. Receptacle not required.

Technical specification

Parameter		Values		
Contact specifications				
Number of contacts		2 CO	3 CO	4 CO
Rated current of the main circuit at the rated voltage, A:		12	10	6
Main circuit rated voltage, V	- for AC 50 Hz	250		
	- for DC	30		
Maximum switched voltage, B	- for AC 50 Hz	250 [1]		
	- for DC	30 [1]		
Maximum switching power, V·A/W		3000/360	2500/300	1500/180
Material of contacts		AgNi, $AgSnO_2$, AgNi+Au		
Trip type		Micro-trip		
Standard contacts		5 В DC/ 100 мА		
Gold-plated contacts		5 В DC/ 10 мА		
Coil characteristics				
Rated power, MW/B·A		0,8-1,1/0,9-1,5		
Operating voltage range		0,8-1,1 Uн		
AC/DC dropout voltage		0,3 Uн/0,1 Uн		
Technical parameters				
Mechanical durability, cycles		$2x10^7$		
Electrical durability at rated load at a frequency of 600 switchesper hour and 50% work factor		$1x10^5$		
Relay life time, min, cycles		$2x10^7$		
Closing/opening time, ms, maximum	- for DC control coil	20/15		
	- for AC control coil	20/25		
Electrical strength of insulation between main and control circuit contacts, kV		1,5		
Electrical strength of insulation between open contacts of the main circuits,kV		1		
Rated value of 1.2/50 μs withstand pulse voltage between main and control circuit contacts, kV	- for 2 CO, 3 CO contact group	4		
	- for 4 CO contact group	2,5		
Rated value of 1.2/50 μs withstand pulse voltage between open contacts of the main circuit, kV		1,5		
Rated value of 1.2/50 μs withstand pulse voltage between contact groups of the main circuit, kV	- for 2 CO, 3 CO contact group	4		
	- for 4 CO contact group	2,5		
Rated insulation voltage, V		250		
Degree of protection from environmental influences		RTI		
Protection class as per GOST 14254	- on the shell side	IP51		
	- on the pins side	IP00		
Operating conditions				
Operating temperature range, °C		-40 to +85		
Installation height above sea level without reduction of electrical parameters, max, m		2000		
Relative humidity, %		5 to 85		
Operating position in space		Arbitrary		

Note:
[1] The curves of dependence of the switching current on the voltage level and current type are given in the operating manual.

Overall dimensions (mm)

OptiRel G RP55-3.. relay for mounting in RR94 receptacles

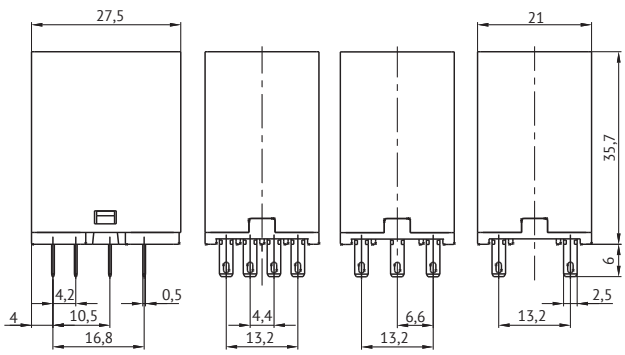

OptiRel G RP55-1.. relay for PCB mounting by soldering

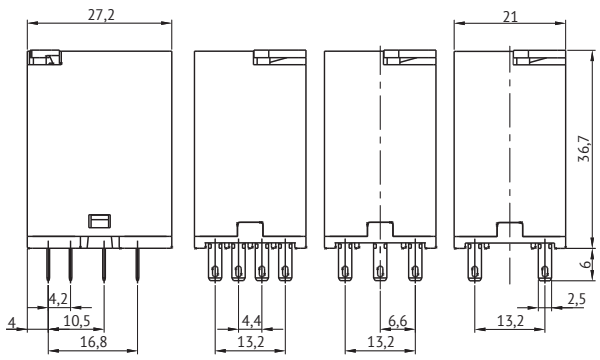

OptiRel G RR94 RP55 relay receptacles

Designation

OptiRel G RR 94 - 5 4 - 230 - 7 - P

(1) (2) (3) (4) (5) (6) (7) (8)

1	Product range name	OptiRel G
2	Product type name	RR — Relay receptacle
3	Series	94
4	Configuration	1 — PCB mounting by soldering 5 — spring or plug-in terminals, logical base 7 — spade lug screw terminals, standard base 8— screw terminals, standard base 9 — screw terminals, logical base
5	Number of groups of main circuit contacts	2; 3; 4
6	Rated supply voltage, V	230
7	Rated current of the main circuit, A	7; 10*; 12**
8	Type of connecting terminals	P — Spring terminals; V — Screw; PI — Plug-in terminals; (empty) — not available

* Only for OptiRel G RR 94-93-230-10-V
** Only for OptiRel G RR 94-92-230-12-V

Items

Appearance	Type of terminals	Base type	Number and current of relay contacts	Product name	Code	Compatible retainer		
						Material	Product name	Code
	Screw terminals for spade lug	Standard	2 CO, 7 A [1]	OptiRel G RR94-72-230-7-V	281170	Plastic Metal	OptiRel G 55-H4 OptiRel G 55-H5	281190 281191
		Standard	4 CO, 7 A	OptiRel G RR94-74-230-7-V	281171			
	Screw	Standard	2 CO, 7 A [1]	OptiRel G RR94-82-230-7-V	281172			
		Logical	2 CO, 12 A	OptiRel G RR94-92-230-12-V	281164			
		Logical	3 CO, 10 A	OptiRel G RR94-93-230-10-V	281165			
		Logical	4 CO, 7 A	OptiRel G RR94-94-230-7-V	281166			
	Spring terminals	Logical	4 CO, 7 A	OptiRel G RR94-54-230-7-P	281169			
	Plug-in terminals	Logical	2 CO, 10 A [2]	OptiRel G RR94-52-230-10-PI	365461			
			4 CO, 6 A	OptiRel G RR94-54-230-6-PI	365462			
	For soldering	–	2 CO, 7 A	OptiRel G RR94-12-230-7	281167	Metal	OptiRel G 55-H1	286404
			4 CO, 7 A	OptiRel G RR94-14-230-7	281168			

Note:
[1] For OptiRel G RP55-32 and OptiRel G RP55-33 relays used to switch loads with a current over 7 A, only OptiRel G RR94-92-23012-V and OptiRel G RR94-93-230-10-V receptacles should be used respectively.
[2] Maximum load current should be not more than 10 A.

Technical specification

Parameter		Values
Technical parameters		
Rated current of the main circuit, A		7; 10 [1]; 12 [2]
Main circuit rated voltage, V		250
Maximum wire size, solid wire and stranded wire, mm²	OptiRel G RR94-8X	1x4
	OptiRel G RR94-9X	2x2,5
	OptiRel G RR94-7X	2x1,5
	OptiRel G RR94-54	
Screw torque, N·m		0,6
Cable stripping length, mm		7
Electrical strength of insulation between control and main circuit connection pins, kV		2
Protection class as per GOST 14254		IP20
Operating conditions		
Operating temperature range		-40 to +70
Height of the installation site above sea level, max., m		2000
Relative humidity, %		5 to 85
Operating position in space		Arbitrary

Note:
[1] Only for OptiRel G RR 94-93-230-10-V
[2] Only for OptiRel G RR 94-92-230-12-V

Overall dimensions (mm)

OptiRel G RR94-8.. receptacle with screw terminals and standard base

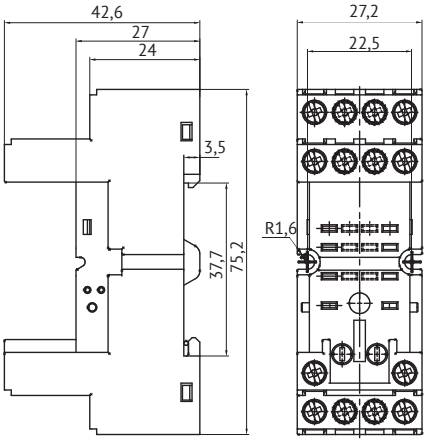

OptiRel G RR94-9.. receptacle with screw terminals and logical base

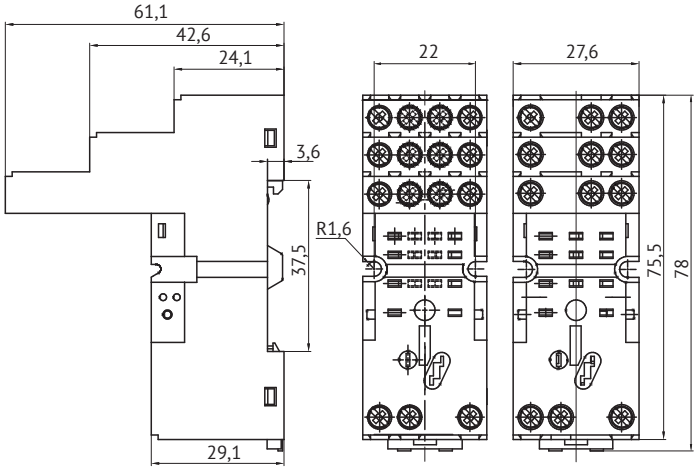

OptiRel G RR94-7.. receptacle with spade lug screw terminals and standard base

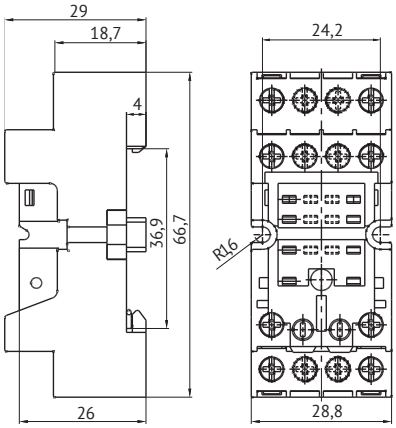

OptiRel G RR94-7.. receptacle with spring terminals and logical base

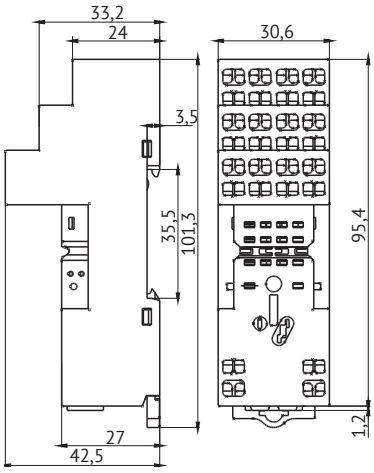

OptiRel G RR94-7.. receptacle with screw terminals and logical base

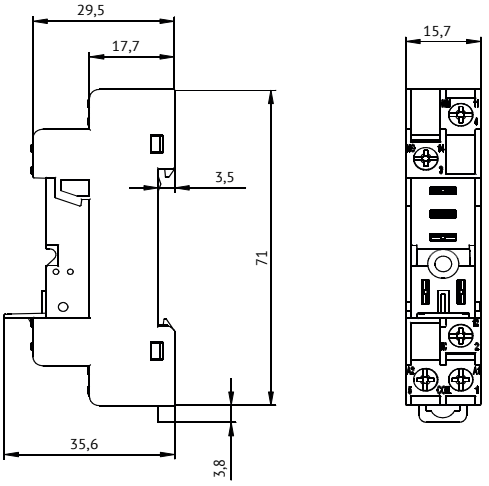

OptiRel G RR94-1.. receptacle for PCB mounting by soldering

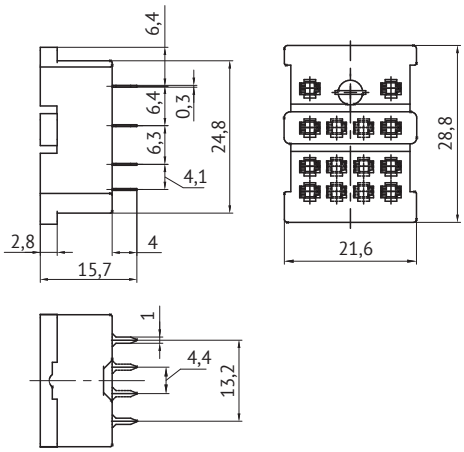

Accessories

Appearance	Type	Purpose	Operating voltage	Circuit diagrams	Series of compatible receptacles	Product name	Code
	RC-circuit	Suppression of pulse currents in the control circuit	6-24 V AC/DC	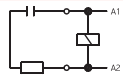	OptiRel G RR94-52-230-10-PI OptiRel G RR94-54-230-6-PI OptiRel G RR94-54-230-7-P OptiRel G RR94-72-230-7-V OptiRel G RR94-74-230-7-V OptiRel G RR94-82-230-7-V OptiRel G RR94-92-230-12-V OptiRel G RR94-93-230-10-V OptiRel G RR94-94-230-7-V OptiRel G RR95-02-230-10-V OptiRel G RR95-52-230-10-P OptiRel G RR95-52-230-10-PI OptiRel G RR95-82-230-10-V	OptiRel G RC-6-24U	281178
			28-60 V AC/DC			OptiRel G RC-28-60U	281179
			110-230 V AC/DC			OptiRel G RC-110-230U	330353
	Bypass diode	Protection against reverse current when power is removed from the control circuit coil	6-220 V DC	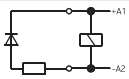		OptiRel G DI-6-220D	330361
	VDR	Limiting surge currents and overvoltage in the control circuit	230 V AC			OptiRel G V-230	330356
	Resistor	Limiting the reverse current amplitude during relay tripping	110-230 V AC	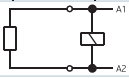		OptiRel G RC-110-230	330352
	Bypass diode + LED	Protection against reverse current when power is removed from the control circuit coil + Operating mode display	6-24 V DC	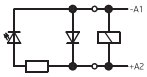		OptiRel G DI-6-24D	281180
			28-60 V DC			OptiRel G DI-28-60D	281181
	VDR + LED	Limiting surge currents and overvoltage in the control circuit + Operating mode display	6-24 V AC/DC	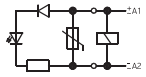		OptiRel G RCV-6-24U/L	330348
			28-60 V AC/DC			OptiRel G RCV-24-60U/L	330358
			110-230 V AC/DC			OptiRel G RCV-110-230U/L	330354

OptiRel G additional protection and display modules

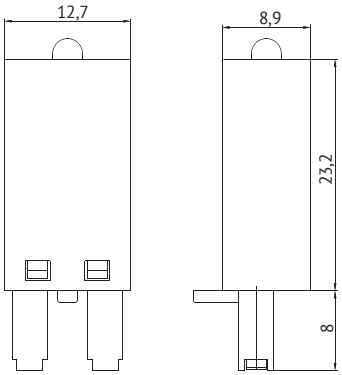

OptiRel D

↗ Time, monitoring, control and protection relays

OptiRel D time, monitoring, control and protection relays are a group of modular device series used for process automation, network and load parameter monitoring, and load protection.

The use of monitoring and protection relays ensures timely notification about deviations of parameters from permissible values, which allows to take measures and recover the situation before more serious malfunctions, equipment damage and additional material costs are caused. The control relays and time relays are designed for load automation, automatic control of devices and technological processes, including the applications requiring activation time delays or maintaining the required operating sequence of system elements.

The OptiRel D series includes a wide range of solutions, from cost-effective single-functional models with analogue parameter setting to advanced multifunctional devices with digital setting and data display on the screen.

Series advantages

The wide range of series and solutions of OptiRel D, as well as the variability of their functionality allow to implement an integrated control and protection system.

The LEDs on the front panel provide convenient visible indication of relay operating modes and condition.

The versions of relays with LED indicators or LCD displays ensure accurate parameter adjustment, and real-time indication of the actual value of a monitored parameter.

The plastic of the OptiRel D relay housing does not support combustion, increasing the equipment application safety even in emergency situations.

The modular housing allows to install the equipment under shields in cabinets for modular equipment, and its compact dimensions provide space optimization.

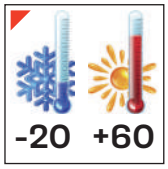

The operating temperature range of the relay is -20 to +60 °C, which allows to use equipment in automation solutions without the need for installation of heating or air conditioning systems.

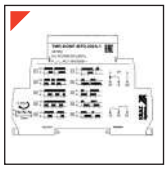

The functional diagrams and connection scheme on the side panel of the relay simplify the commissioning process and decrease the probability of errors during installation.

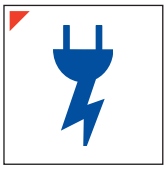

The wide range of power supply voltages 24-240 V AC/DC for operation in unstable supply networks ensures stable operation of the technological process and prevents unscheduled shutdowns.

Scales marked with absolute values and two potentiometers for time relay setting increase the relay setting accuracy and decrease the commissioning time.

The long-term service life and high operating life of up to 10 million switching cycles ensure reliable operation and reduced operating costs.

OptiRel D TMR Time relays

The OptiRel D TMR series time relays are intended for automatic control of devices and processes requiring activation time delay or maintaining a required operating sequence of system elements. The relays are used in technological process control and automation solutions, for example, in ventilation, heating and air conditioning systems of residential and commercial buildings and industrial facilities, and to solve other tasks.

The product range of KEAZ time relays comprises a wide range of solutions, including both single-functional models with analogue parameter setting, and multifunctional devices, including ones with digital setting and data display on the screen.

Designation

OptiRel D TMR - DONF - MTD - 240U - 2

(1) (2) (3) (4) (5) (6)

1	Product range name	OptiRel D	
2	Product type name	TMR — time relays	
3	Function	DON — turn-on delay DOF — turn-off delay DOFU — turn-off delay with no supply voltage DONS — star-delta ACY — cyclic ARD — cyclic with pause, for engine reverse DONF — multifunctional	
4	Work algorithm	1T — single-command 2T — dual-command MT — multicommand MTD — multicommand with display	
5	Rated supply voltage, V	230A — 230 V AC	240U — 12-240 V AC/DC
6	Number and type of output contacts	1 — 1 CO 2 — 2 CO 2I — 1 CO with adjustable delay + 1 CO instantaneous	

Items

Appearance	Function	Rated supply voltage	Time setting range	Number of output contacts	LED-indicator	Product name	Code
	Switch-on delay	230 V AC	0.1 s - 10 days (8 intervals)	1 CO	-	OptiRel D TMR-DON-1T-230A-1	332006
		230 V AC		2 CO	-	OptiRel D TMR-DON-1T-230A-2	332010
		12-240 V AC/DC		1 CO	-	OptiRel D TMR-DON-1T-240U-1	332008
		12-240 V AC/DC		2 CO	-	OptiRel D TMR-DON-1T-240U-2	332012
		12-240 V AC/DC		2 CO [1]	-	OptiRel D TMR-DON-1T-240U-2I	332014
		12-240 V AC/DC		2 CO [2]	-	OptiRel D TMR-DON-2T-240U-2	332029
	Switch-off delay	230 V AC	0.1 s - 10 days (8 intervals)	1 CO	-	OptiRel D TMR-DOF-1T-230A-1	332007
		230 V AC		2 CO	-	OptiRel D TMR-DOF-1T-230A-2	332011
		12-240 V AC/DC		1 CO	-	OptiRel D TMR-DOF-1T-240U-1	332009
		12-240 V AC/DC		2 CO	-	OptiRel D TMR-DOF-1T-240U-2	332013
		12-240 V AC/DC		2 CO [1]	-	OptiRel D TMR-DOF-1T-240U-2I	332015
	Switch-off delay with no supply voltage	12-240 V AC/DC	0.1 s - 10 min (4 intervals)	1 CO	-	OptiRel D TMR-DOFU-1T-240U-1	332016
	Star-delta	12-240 V AC/DC	0.1 s - 10 min (4 intervals)	2 CO	-	OptiRel D TMR-DONS-1T-240U-2	332017

Appearance	Function	Rated supply voltage	Time setting range	Number of output contacts	LED-indicator	Product name	Code
	Cyclic	12-240 V AC/DC	0.1 s - 10 days (8 intervals)	1 CO	-	TMR-ACY-1T-240U-1	332030
	Cyclic with pause (Alternate load activation relays / Engine reverse relays)	12-240 V AC/DC	0.1 s - 99 days (digital setting)	1 CO	+	TMR-ARD-1T-240U-1	357858
	Multifunctional, 10 functions	12-240 V AC/DC	0.1 s - 10 days (8 intervals)	1 CO	-	TMR-DONF-MT-240U-1	332018
		12-240 V AC/DC		2 CO	-	TMR-DONF-MT-240U-2	332019
	Multifunctional, 20 functions	12-240 V AC/DC	0.1 s - 99 days (digital setting)	2 CO	+	TMR-DONF-MTD-240U-2	357856

Note:
[1] One output contact has an adjustable delay, and the second one trips instantaneously regardless of the time settings.
[2] Two output contacts have independent time delay settings and operate independently of each other.

Technical specification

Parameter		Value
Operating mode		continuous
Protection class in accordance with GOST 14254	provided by the enclosure	IP40
	on the output side	IP20
Rated insulation voltage Ui, V		270
Rated impulse withstand voltage Uimp, kV		4
Power outputs		A1-A2
Rated voltage of control circuit Un, V	240U	AC/DC: 12-240 (50-60Hz)
	230A	AC: 230 (50-60Hz)
Maximum input power, VA/W	240U	3 / 1,7
	230A	6 / 1,9
Supply voltage permissible tolerance, %		-15; +10
Rated operating current in AC-1 utilization category at 250 V, 50 Hz voltage, A		16
Rated operating current in AC-15 utilization category as per GOST IEC 60947-5-1 at 250 V, 50 Hz voltage		5
Minimum switching DC power, mW		500
Maximum switched voltage, B		AC: 250/DC: 24
Time delay range	DONF-MTD, ARD	0.1 s - 99 days, ON, OFF
	DON, DOF, ACY, DONF-MT	0.1 s - 10 days, ON, OFF
	DOFU, DONS	0,1 c - 10 min
Minimum control pulse, ms, min	ACY, ARD, DOF, DON, DONF, DONS	25
	DOFU	200
Reset time, ms, max		200
Temperature coefficient at 20 °C		0,05 %/°C
Time delay setting error, %		10
Time delay error, %		0,2
Restart delay duration, s		0,2
Mechanical wear resistance, ON/OFF cycles, min		$1x10^7$
Electrical wear resistance in utilization category AC-1, ON/OFF cycles, min		$1x10^5$

Parameter		Value
Conductor connection		
Flexible conductor with lug, mm²	1 conductor/2 conductors	1 – 2,5 / 0,75 – 1,5
Flexible conductor with no lug, mm²	1 conductor/2 conductors	1 – 2,5 / 0,75 – 1,5
Rigid conductor, mm²	1 conductor	1 – 4
	2 conductors	0,75 – 2,5
Stripped insulation length, mm		8
Screw tightening torque, N·m		0,4
Tool		Philips №0 screwdriver or flat end screwdriver Ø4
Operating conditions		
Ambient temperature, °C	In operation	-20...+60
	In storage	-35...+75
Altitude above the sea level, max, m		2000
Pollution degree in accordance with GOST IEC 60255-27		2
Electromagnetic environment in accordance with GOST IEC 60255-26		B
Overvoltage category in accordance with GOST R IEC 60664-1		III

Overall dimensions (mm)

OptiRel D TMR time relay with analogue setting

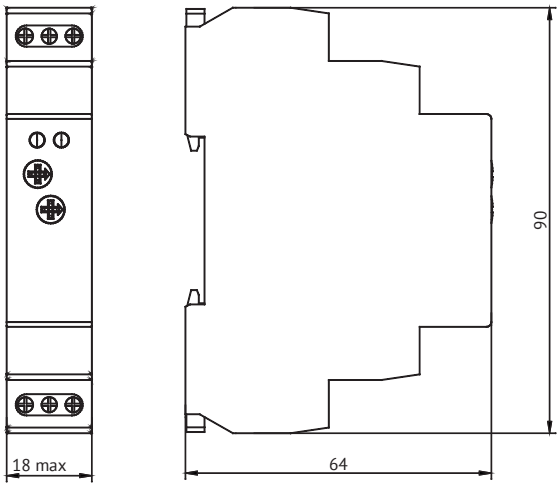

OptiRel D TMR time relay with digital setting

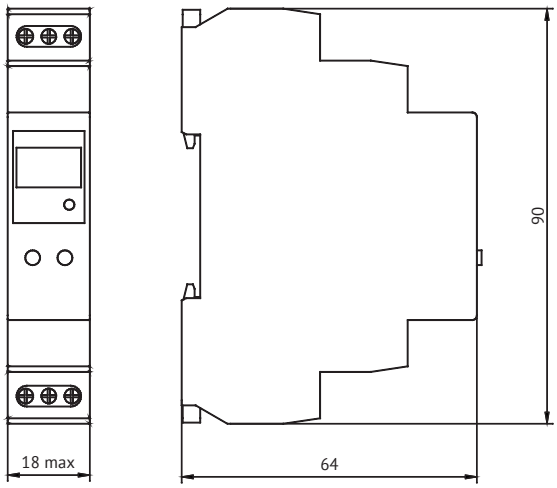

OptiRel D PVP and OptiRel D PVC Voltage relays

The OptiRel D PVP voltage relays and OptiRel D PVC voltage and current relays are intended for level control of single-phase and three-phase voltage in electric power supply networks, and provide protection of electric equipment and consumers in the event of supply network quality issues. The OptiRel D PVC relay series also provide consumed load current monitoring.

All voltage relays have a built-in contactor which opens its contacts and disables the load in the event of deviation of monitored parameters. Using the function of repeated activation with time setting capability, the relay automatically restores load power supply after the return of monitored parameters to the allowable range.

All devices are supplied with an LED indicator allowing to accurately set all parameters, and providing real-time indication of monitored parameters.

Designation

OptiRel D PVC - 3 - 63

1 2 3 4

1	Product range name	OptiRel D	
2	Product type name	PVP — overcurrent and reduced current protection relays	PVC — overvoltage and lowered voltage protection relay with current monitoring (power limitation function)
3	Number of phases	(empty) — single-phase; 3 — three-phase	
4	Rated load current	32 — 32 A; 63 — 63 A; 80 — 80 A	

Items

Appearance	LED-indicator	Connection diagram	Voltage monitoring	Current monitoring	Rated current, A	Product name	Code
	+	1P+N	+	-	32	OptiRel D PVP-32	357861
					63	OptiRel D PVP-63	357864
					80	OptiRel D PVP-80	357865
			+	+	32	OptiRel D PVC-32	357866
					63	OptiRel D PVC-63	357869
					80	OptiRel D PVC-80	357870
		3P+N	+	+	63	OptiRel D PVC-3-63	357871

Technical specification

Parameter		Value
Operating mode		continuous
Protection class in accordance with GOST 14254	on front panel side	IP40
	on terminal side	IP20
Electrical strength of the insulation between power supply terminals and relay actuation terminals, kV		4
Rated supply voltage Un AC, V		220
Current type		AC
Supply line rated frequency, Hz		45 – 65
Allowable voltage upper limit adjustment range, V		230 – 300
Allowable voltage lower limit adjustment range, V		140 – 210
Maximum power consumption, V/A, AC		3
Rated operating current in AC-1 utilization category at 220 V, 50 Hz voltage	PVP, PVC	32 / 63 / 80
	PVC-3	63
Activation threshold with overcurrent, A	PVC	1 – 32 / 63 / 80
	PVC-3	1 – 63
Operating voltage range, V		80 – 400
Rated insulation voltage, V		400
Type of actuating relay contacts		HO
Response delay time, s		0,1 – 10
Startup delay time, s		2 – 600
Duration of repeated activation delay after tripping, s		2 – 900
Monitored voltage measurement error, max, %		≤ 1
Hysteresis, V		> 5 (adj.)
Temperature coefficient (normal value at 20 °C)		0,1 % / °C
Mechanical wear resistance, ON/OFF cycles, min		$1x10^7$
Electrical wear resistance with utilization category AC-1, ON/OFF cycles, min		$1x10^5$
Insulation resistance, MΩ		20
Conductor connection		
Flexible conductor with lug, mm^2	1 conductor/2 conductors	1 - 35/ 0,75 - 10
Flexible conductor with no lug, mm^2	1 conductor/2 conductors	1 - 35/ 0,75 - 10
Rigid conductor, mm^2	1 conductor	1 - 35
	2 conductors	0,75 - 10
Stripped insulation length, mm		10
Screw tightening torque, N·m		3,5 ± 0,4
Tool		Screwdriver with profile PZ2
Operating conditions		
Ambient temperature, °C	In operation	-20...+60
	In storage	-35...+75
Altitude above the sea level, max, m		2000
Pollution degree in accordance with GOST IEC 60255-27		2
Electromagnetic environment in accordance with GOST IEC 60255-26		B
Overvoltage category in accordance with GOST R IEC 60664-1		III

Overall dimensions (mm)

OptiRel D PVP and OptiRel D PVC single-phase voltage relays

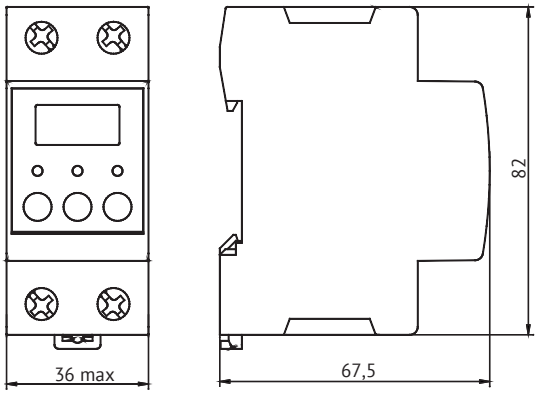

OptiRel D PVC three-phase voltage relays

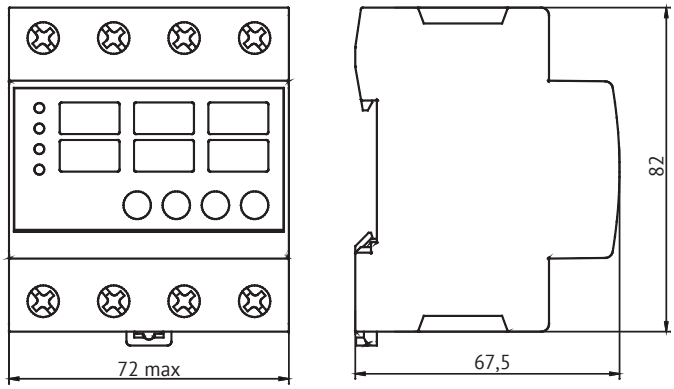

OptiRel D PHS Voltage monitoring relays

The OptiRel D PHS voltage monitoring relays are a wide range of advanced compact relays monitoring the parameters of single-phase and three-phase voltage in electric power supply networks, and provide protection of electric equipment and consumers in the event of supply network quality issues.

The voltage monitoring relays allow to monitor the deviations of the voltage level from the set thresholds, and three-phase models are also capable of monitoring phase sequences, phase losses and phase unbalance. In the event of deviation of monitored parameters, the relay changes the position of output contacts, sending a signal to the control and dispatching system.

The product range of the OptiRel D PHS series is represented by a wide range of electronic relays with various functional capabilities with analogue setting of threshold values, and advanced digital devices with an LCD display.

Designation

OptiRel D PHS - 1 - 2M - 11 - PN - 2

(1) (2) (3) (4) (5) (6) (7)

1	Product range name	OptiRel D
2	Product type name	PHS — voltage (phase) monitoring relays
3	Number of phases	1 — single-phase; 3 — three-phase
4	Relay housing width	1M — 1 module (18 mm); 2M — 2 modules (36 mm)
5	Function	01...11 — function number (ref. selection table for description of the functions and relay characteristics) D — digital multifunctional relay with display
6	Connection diagram	PN — with neutral monitoring (P-N); PP — without neutral monitoring (P-P)
7	Number and type of output contacts	1 — 1 CO; 2 — 2 CO

Items

Appearance	Connection diagram	LCD-display	Relay power supply	Overvoltage, V	Lowered voltage, V	Hysteresis, %	Activation delay, s	Number of output contacts	Product name	Code
	1P+N	-	From monitoring circuit 50-270 V AC/DC	65 - 260, incr. or decr.		5 - 20	0,1 - 10	1 CO	OptiRel D PHS-1-1M-01-PN-1	332004
				65 - 260	65 - 260	3	0,1 - 10	1 CO	OptiRel D PHS-1-1M-02-PN-1	332005
			External power supply 24-240 V AC/DC	15 - 600	15 - 600	5 - 20	0,1 - 10	2 CO	OptiRel D PHS-1-2M-11-PN-2	357852
		+	From monitoring circuit 50-350 V AC/DC	65 - 300	65 - 300	from 5 V, adj.	0,1 - 20	2 CO	OptiRel D PHS-1-2M-D-PN-2	357848

Appearance	Connection diagram	LCD display	Overvoltage, V	Lowered voltage, V	Phase loss	Phase sequence	Phase unbalance, %	Hysteresis, %	Activation delay, s	Number of output contacts	Product name	Code
	3P+N	-	-	-	+	+	-	2	-	1 CO	OptiRel D PHS-3-1M-03-PN-1	331983
			-	-	+	+	-	2	-	2 CO	OptiRel D PHS-3-1M-03-PN-2	331993
	3P		-	-	+	+	-	2	-	1 CO	OptiRel D PHS-3-1M-03-PP-1	331988
			-	-	+	+	-	2	-	2 CO	OptiRel D PHS-3-1M-03-PP-2	331997
	3P+N		-20...+ 2% Un (101 - 270 V)	-20...+ 2% Un (260 - 318 V)	+	+	-	2	0,1 - 10	1 CO	OptiRel D PHS-3-1M-04-PN-1	331985
					+	+	-	2	0,1 - 10	2 CO	OptiRel D PHS-3-1M-04-PN-2	331994
	3P		-20...+ 2% Un (176 - 470 V)	-20...+ 2% Un (450 - 552 V)	+	+	-	2	0,1 - 10	1 CO	OptiRel D PHS-3-1M-04-PP-1	331989
					+	+	-	2	0,1 - 10	2 CO	OptiRel D PHS-3-1M-04-PP-2	331998
	3P+N		-20...+ 2% Un (101 - 270 V)	-20...+ 2% Un (260 - 318 V)	+	+	8	2	0,1 - 10	1 CO	OptiRel D PHS-3-1M-05-PN-1	331986
					+	+	8	2	0,1 - 10	2 CO	OptiRel D PHS-3-1M-05-PN-2	331995
	3P		-20...+ 2% Un (176 - 470 V)	-20...+ 2% Un (450 - 552 V)	+	+	8	2	0,1 - 10	1 CO	OptiRel D PHS-3-1M-05-PP-1	331990
					+	+	8	2	0,1 - 10	2 CO	OptiRel D PHS-3-1M-05-PP-2	331999
	3P+N		-20...+ 2% Un (101 - 270 V)	-20...+ 2% Un (260 - 318 V)	+	+	5 - 15	2	2	1 CO	OptiRel D PHS-3-1M-06-PN-1	331987
					+	+	5 - 15	2	2	2 CO	OptiRel D PHS-3-1M-06-PN-2	331996
	3P		-20...+ 2% Un (176 - 470 V)	-20...+ 2% Un (450 - 552 V)	+	+	5 - 15	2	2	1 CO	OptiRel D PHS-3-1M-06-PP-1	331991
					+	+	5 - 15	2	2	2 CO	OptiRel D PHS-3-1M-06-PP-2	332000
	3P		-15% Un (187 - 391 V)	+15% Un (255 - 529 V)	+	+	8	2	2	1 CO	OptiRel D PHS-3-1M-08-PP-1	331992
					+	+	8	2	2	2 CO	OptiRel D PHS-3-1M-08-PP-2	332001
	3P+N		-20...+ 2% Un (101 - 270 V)	-20...+ 2% Un (260 - 318 V)	+	+	5 - 15	2	0,1 - 10 [1]	2 CO	OptiRel D PHS-3-2M-10-PN-2	332002
	3P		-20...+ 2% Un (176 - 470 V)	-20...+ 2% Un (450 - 552 V)	+	+	5 - 15	2	0,1 - 10 [1]	2 CO	OptiRel D PHS-3-2M-10-PP-2	332003
	3P+N	+	80 - 350/Off	80 - 350/Off	+	On/Off	5 - 20/Off	2	0,1 - 20 [2]	2 CO	OptiRel D PHS-3-2M-D-PN-2	357849
	3P		150 - 600/Off	150 - 600/Off	+	On/Off	5 - 20/Off	2	0,1 - 20 [2]	2 CO	OptiRel D PHS-3-2M-D-PP-2	357850

Note:
[1] The relay has the function of setting the delay of reset after restoration of monitored parameters within the range of 0.1 - 10 s.
[2] The relay has the function of activating and setting the delay of reset after restoration of monitored parameters within the range of 0.3 - 30 s.

Technical specification

Parameter		Value
Operating mode		continuous
Protection class in accordance with GOST 14254	on front panel side	IP40
	on terminal side	IP20
Electrical strength of the insulation between power supply terminals and relay actuation terminals, kV		4
Rated AC frequency, Hz		45-65
Rated operating current in AC-1 utilization category at 250 V 50 Hz voltage, conventional outdoor thermal current Ith, A		16
Minimum switching DC power, mW		500
Maximum switched voltage, B		AC: 250/DC: 24
Setting error (mechanical), %		10
Repetition error, less than, %		1
Temperature coefficient (normal value at 20 °C)		0,1%/°C
Mechanical wear resistance, ON/OFF cycles, min		$1x10^7$
Electrical wear resistance in utilization category AC-1, ON/OFF cycles, min		$1x10^5$
Conductor connection		
Flexible conductor with lug, mm^2	1 conductor / 2 conductors	1 - 2,5 / 0,75 - 1,5
Flexible conductor with no lug, mm^2	1 conductor / 2 conductors	1 - 2,5 / 0,75 - 1,5
Rigid conductor, mm^2	1 conductor	1 - 4
	2 conductors	0,75 - 2,5
Stripped insulation length, mm		8
Screw tightening torque, N·m		0,4
Tool		Philips №0 screwdriver or flat end screwdriver Ø4
Operating conditions		
Ambient temperature, °C	In operation	-20...+60
	In storage	-35...+75
Altitude above the sea level, max, m		2000
Pollution degree in accordance with GOST IEC 60255-27		2
Electromagnetic environment in accordance with GOST IEC 60255-26		B
Overvoltage category in accordance with GOST R IEC 60664-1		III

Overall dimensions (mm)

OptiRel D PHS voltage monitoring relay 1 module wide with analogue setting

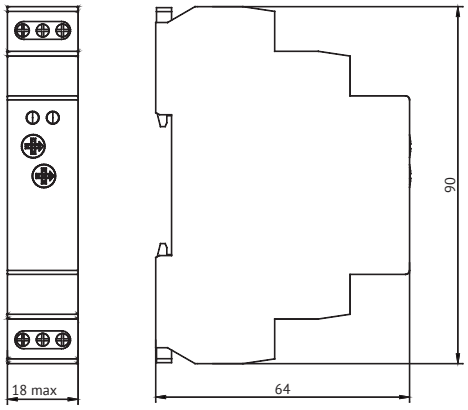

The OptiRel D PHS voltage monitoring relay 2 modules wide with digital setting, as well as models with analogue settings and external power supply

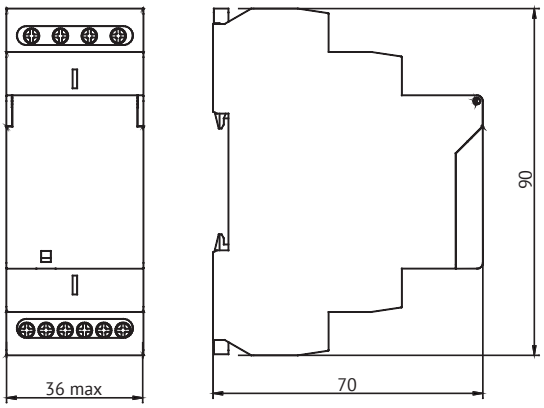

OptiRel D PHS voltage monitoring relay 2 module wide with analogue setting

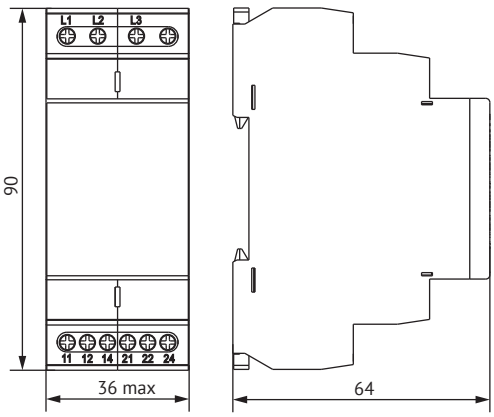

OptiRel D Monitoring relays

The monitoring relays allow to trace the actual parameters and monitor the current, temperature and liquid level during operation of technological equipment.

The OptiRel D CMR current monitoring relays are designed to monitor the current level in single-phase AC current circuits and disconnect the load when it exceeds or falls below the current setpoint with adjustable time delay.

The OptiRel D LVL level monitoring relays are designed for liquid level monitoring by using level sensors and controlling pump and shut-off devices for filling and draining of tanks.

The OptiRel D TMP temperature monitoring relays are designed for monitoring the set temperature by using NTC temperature sensors and allow to control equipment for temperature regulation in a controlled area of an electrical plant or room to prevent failures of connected equipment.

Designation

OptiRel D TMP - NTC - 05 - 240U - 1

(1) (2) (3) (4) (5)

1	Product range name	OptiRel D		
2	Product type name	CMR — current monitoring relays	TMP — temperature monitoring relays	LVL — liquid level monitoring relays
3	Measurement threshold/type and length of sensor cable	05 — 50...500 mA 1 — 0,1...1 A 5 — 0,5...5 A 16 — 1,6 - 16 A	NTC-05 — NTC; 0,5 m NTC-1 — NTC; 1 m NTC-2 — NTC; 2 m	S — 3 electrodes; 1.5 m
4	Rated supply voltage, V	240U — 12-240 V AC/DC		
5	Number and type of output contacts	1 — 1 CO		

Items

OptiRel D CMR Current monitoring relays

Appearance	Function	Threshold setting range	Rated supply voltage	Number of output contacts	Product name	Code
	Overvoltage or lowered voltage monitoring	50 - 500 mA	24 - 240 V AC/DC	1 CO	OptiRel D CMR-05-240U-1	332025
		0,1 - 1 A			OptiRel D CMR-1-240U-1	332026
		0,5 - 5 A			OptiRel D CMR-5-240U-1	332027
		1,6 - 16 A			OptiRel D CMR-16-240U-1	332028

OptiRel D TMP Temperature monitoring relays

Appearance	Function	Type and length of sensor in delivery package	Rated supply voltage	Number of output contacts	Product name	Code
	High and low temperature monitoring	NTC; 0,5 m [1]	24 - 240 V AC/DC	1 CO	OptiRel D TMP-NTC-05-240U-1	332031
		NTC; 1 m [1]			OptiRel D TMP-NTC-1-240U-1	332032
		NTC; 2 m [1]			OptiRel D TMP-NTC-2-240U-1	332033

Note:
[1] Maximum and minimum temperature threshold setting range: -15...+45 °C

OptiRel D LVL Liquid level monitoring relays

Appearance	Function	Type and length of sensor in delivery package	Rated supply voltage	Number of output contacts	Product name	Code
	Monitoring the maximum and minimum levels and controlling the actuators	3 electrodes; 1.5 m	24 - 240 V AC/DC	1 CO	OptiRel D LVL-S-240U-1	332024

Technical specification

Parameter		Value
Operating mode		continuous
Protection class in accordance with GOST 14254	on front panel side	IP40
	on terminal side	IP20
Electrical strength of the insulation between power supply terminals and relay actuation terminals, kV		4
Rated supply voltage Un		24 - 240
Main circuit rated voltage, V		250
Rated AC frequency, Hz		50 - 60
Supply voltage permissible tolerance, %		-15; +10
Consumed power, max, V·A		2
Rated current of the main circuit of output contacts, A		Up to 10 (depending on the model)
Minimum switching DC power, mW		500
Maximum switched voltage, B		AC: 250 / DC: 24
Setting error (mechanical), %		10
Repetition error, less than, %		1
Hysteresis (for current monitoring relays), %		5
Mechanical wear resistance, ON/OFF cycles, min		$1x10^7$
Electrical wear resistance in utilization category AC-1, ON/OFF cycles, min		$1x10^5$
Conductor connection		
Flexible conductor with lug, mm^2	1 conductor / 2 conductors	1 - 2,5 / 0,75 - 1,5
Flexible conductor with no lug, mm^2	1 conductor / 2 conductors	1 - 2,5 / 0,75 - 1,5
Rigid conductor, mm^2	1 conductor	1 - 4
	2 conductors	0,75 - 2,5
Stripped insulation length, mm		8
Screw tightening torque, N·m		0,4
Tool		Philips #0 screwdriver or flat end screwdriver Ø4
Operating conditions		
Ambient temperature, °C	In operation	-20...+60
	In storage	-35...+75
Altitude above the sea level, max, m		2000
Pollution degree in accordance with GOST IEC 60255-27		2
Electromagnetic environment in accordance with GOST IEC 60255-26		B
Overvoltage category in accordance with GOST R IEC 60664-1		III

Overall dimensions (mm)

OptiRel D CMR current monitoring relay, OptiRel D TMP temperature monitoring relay, OptiRel D LVL liquid level monitoring relay

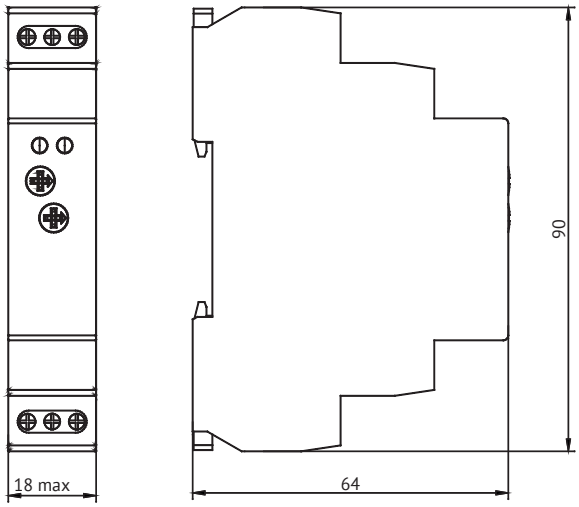

OptiRel D Control relays

The OptiRel D control relays are a set of equipment series for load automation solutions which are used at residential and commercial construction sites and include:

- The OptiRel D GR modular interposing relays are designed for load switching are used to resolve tasks requiring remote load control, galvanic isolation or signal splitting and amplification.
- The OptiRel D IMR pulse relays sequentially change the condition of the output relay's transfer contact when the control input receives a short pulse, most frequently arriving from a button lighting control switch.
- The OptiRel D FMR dusk relays (photo relays) are designed for monitoring the illumination and load activation/deactivation when the illumination level detected by the sensor is increased (decreased).
- The OptiRel D SSW stairway lighting relays (stairway timers) are used to control lighting or other loads requiring the possibility of activation from several control points and deactivation delay.

Designation

OptiRel D GR - 08 - 024U - 2

(1) (2) (3) (4) (5)

1	Product range name	OptiRel D			
2	Product type name	GR — modular interposing relays	IMR — pulse relays	FMR — dusk relays (photo relays)	SSW — stairway lighting relays (stairway timer)
3	Rated current/type and length of sensor cable/function	08 — 8 A 16 — 16 A	(empty)	15 — sensor with cable 1.5 in the delivery package	15 — sensor with cable 1.5 in the delivery package
4	Rated supply voltage, V	024U — 24 V AC/DC 230A — 230 V AC 230U — 230 V AC или 24 V AC/DC 240A — 110-240 V AC 240U — 12-240 V AC/DC			
5	Number and type of output contacts	1 — 1 CO; 2 — 2 CO; 3 — 3 CO			

Items

OptiRel D GR Modular interposing relays

Appearance	Rated current (AC-1)	Rated supply voltage	Number of output contacts	Product name	Code
	8 A	24 V AC/DC	2 CO	OptiRel D GR-08-024U-2	332037
			3 CO	OptiRel D GR-08-024U-3	332039
		230 B AC или 24 V AC/DC	2 CO	OptiRel D GR-08-230U-2	332038
			3 CO	OptiRel D GR-08-230U-3	332040
	16 A	24 V AC/DC	1 CO	OptiRel D GR-16-024U-1	332035
			3 CO	OptiRel D GR-16-024U-3	332041
		230 V AC	3 CO	OptiRel D GR-16-230A-3	332042
		230 V AC или 24 V AC/DC	1 CO	OptiRel D GR-16-230U-1	332036

OptiRel D IMR Pulse relays

Appearance	Rated current (AC-1)	Rated supply voltage	Number of output contacts	Product name	Code
	16 A	230 V AC	1 CO	OptiRel D IMR-230A-1	332020
			2 CO	OptiRel D IMR-230A-2	332022
		12-240 V AC/DC	1 CO	OptiRel D IMR-240U-1	332021
			2 CO	OptiRel D IMR-240U-2	332023

OptiRel D FMR Dusk relays (photo relays)

Appearance	Rated current (AC-1)	Rated supply voltage	Number of output contacts	Product name	Code
	16 A	110-240 V AC	1 CO	OptiRel D FMR-15-240A-1 [1]	332034

Note:
[1] Sensor with cable 1.5 in the delivery package.

OptiRel D SSW Stairway lighting relays (stairway timers)

Appearance	Rated current (AC-1)	Rated supply voltage	Number of output contacts	Product name	Code
	16 A	230 V AC	1 CO	OptiRel D SSW-1-230A-1 [1]	357859
				OptiRel D SSW-M-230A-1 [2]	357860

Note:
[1] Single-function, with manual control option.
[2] Multifunctional, 10 operation modes.

Technical specification

Parameter		Value
Operating mode		continuous
Protection class in accordance with GOST 14254	on front panel side	IP40
	on terminal side	IP20
Electrical strength of the insulation between power supply terminals and relay actuation terminals, kV		4
Input circuit		
Rated supply voltage Un	230A	230 AC
	240A	110-240 AC
	230U	230 AC or 24 AC/DC
	240U	12-240 AC/DC
Rated AC frequency, Hz		50-60
Supply voltage permissible tolerance, %		-15 %:+10 %
Power consumption, V·A/W	*-230A-1 *-240A-1	1,7
	*-230A-2 *-240A-2	2,1
	230U	AC 3,0/DC 1,7
	240U	
Control circuit		
Power supply terminals		A1-A2
Control terminals		A1-S
Control pulse minimum duration, ms		25
Control pulse maximum duration, ms		Unlimited
Contact specifications		
Contact group	*-1	1 CO
	*-2	2 CO
	*-3	3 CO
Restart delay duration, s		0,2
Main circuit rated voltage, V		250
Rated current of the main circuit, A		8/16 (depending on the model)
Mechanical durability, cycles		$1x10^7$
Electrical durability at AC-1 rated load, cycles		$1x10^5$
Conductor connection		
Flexible conductor with lug, mm^2	1 conductor/2 conductors	1 - 2,5 / 0,75 - 1,5
Flexible conductor with no lug, mm^2	1 conductor/2 conductors	1 - 2,5 / 0,75 - 1,5
Rigid conductor, mm^2	1 conductor	1 - 4
	2 conductors	0,75 - 2,5

Parameter		Value
Stripped insulation length, mm		7
Screw tightening torque, N·m		0,4
Tool		Philips №0 screwdriver or flat end screwdriver Ø4
Operating conditions		
Ambient temperature, °C	In operation	-20...+60
	In storage	-35...+75
Altitude above the sea level, max, m		2000
Pollution degree in accordance with GOST IEC 60255-27		2
Electromagnetic environment in accordance with GOST IEC 60255-26		B
Overvoltage category in accordance with GOST R IEC 60664-1		III

Overall dimensions (mm)

OptiRel D GR modular interposing relays, OptiRel D IMR pulse relays, OptiRel D FMR dusk relays and OptiRel D SSW stairway lighting relays

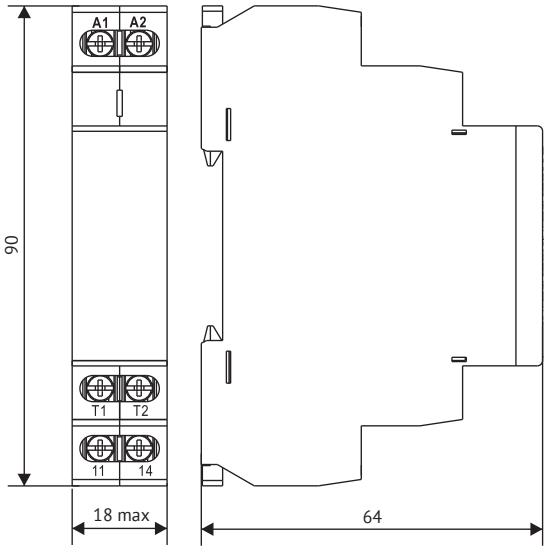

OptiPower

Power supply units

Universal single-phase OptiPower power supply units of DR, MDR and LRS series are pulsed AC/DC voltage converters mounted on a din-rail or circuit board. They provide power to various automation devices with a stabilized DC voltage of 12 V or 24 V and output overload, overvoltage and short circuit protection.

Din-rail power supply units

OptiPower DR

In (A): 0.63 to 2.5
Uin (V AC): 230
Uout (V, DC): 24
Power (W): 15 to 60

OptiPower DR, DRP

In (A): 3.1 to 210
Uin (V AC): 230
Uout (V, DC): 24
Power (W): 75 to 240

OptiPower MDR

In (A): 0.42 to 4
Uin (V AC): 230
Uout (V, DC): 24
Power (W): 10 to 100

Panel power supply units

OptiPower LRS

In (A): 1.5 to 33
Uin (V AC): 230
Uout (V, DC): 12, 24
Power (W): 35 to 400

OptiPower

↗ Power supply units

Universal single-phase OptiPower power supply units of DR, MDR and LRS series are pulsed AC/DC voltage converters mounted on a din-rail or circuit board. They provide power to various automation devices with a stabilized DC voltage of 12 V or 24 V and output overload, overvoltage and short circuit protection.

Designation

OptiPower MDR - 100 - 24 - 1

(1) (2) (3) (4) (5)

1	Series	OptiPower
2	Power supply unit type	DR, MDR, LRS
3	Output power, W	10–400
4	Output voltage, V	12, 24
5	Number of output phases	1 — single-phase

Selection guide

Series	OptiPower DR	OptiPower MDR	OptiPower LRS
Appearance			
Power range, W	15–240	10–100	35–400
Output voltage, V	24 DC	24 DC	12 DC; 24 DC
Efficiency	Up to 85 %	Up to 87 %	Up to 89 %
Narrow case	-	+	-
Overload protection	+	+	+
Short-circuit protection	+	+	+
Overvoltage protection	+	+	+
Power good indication	+	+	+
Output voltage adjustment	+	+	+
Dry contact DC OK	-	+	-

Series advantages

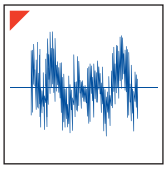

Interference resistance and low electromagnetic interference radiation.

Wide range of power (10 to 240 W) and supply voltage (85 to 264 V AC and 124 to 370 V DC).

Efficiency up to 87 %

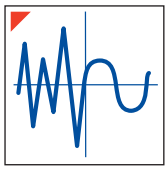

High stability of output voltage over the entire power supply range.

Output voltage status indication

Output overload, overvoltage and short circuit protection.

Narrow case (from 22.5 mm) and additional status contacts (for MDR series).

Output voltage adjustment +/- 10 %

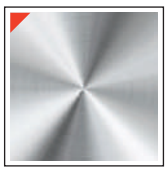

Metal case from 75 W (for DR series)

Dual output terminals for easy connection.

Technical specification

Parameter		Parameter values by model											
		DR						MDR					DRP
Output	Output power, W	15	30	45	60	75	120	10	20	40	60	100	240
	Rated output voltage, V	24											
	Output voltage range, V	21,6~26,4						21,6~26,4					21,6~ 26,4
	Rated output current, A	0,63	1,5	2	2,5	3,2	5	0,42	1	1,7	2,5	4	10
	Output current range, A	0–0,63	0–1,5	0–2	0–2,5	0–3,2	0–5	0–0,42	0–1	0–1,7	0–2,5	0–4	0–10
	Output voltage setting time, ms 230 V	800		800	800	500	500	500		1000		3000	1000
	Output voltage setting time, ms 115 V	1500		1500	1500	1000	500	500		1600		3000	3000
	Output voltage holding time, ms 230 V	30		30	50	50	50	50		50		50	20
	Output voltage holding time, ms 115 V	10		10	10	10	10	15		20		15	20
	Maximum output voltage error, %	1											
Input	AC input voltage, V	85–264											
	DC input voltage, V	124–370											
	AC input voltage frequency, Hz	47–63											
	Efficiency, %	82	83	83	84	83	84	84		87	87	85	83
	Network current consumption, A 230 V	0,48	0,4	0,5	0,8	0,9	2	0,35		0,7	1	0,8	1,8
	Network current consumption, A 115 V	0,88		0,95	1,2	1,8	3,3	0,55		1,1	1,5	1,3	3,5
	Starting current, A 230 V	65	56	56	60	60	60	40		60	60	60	70
	Starting current, A 115 V	35	28	28	30	30	30	20		30	30	30	40
Protection	Current (power) protection, %	105–150											
	Output overvoltage protection, V	29,0–36,0	27,6–33,6					27,6–33,6					30–36
Environment	Operating temperature, °C	-10 ~ +50											
	Relative humidity, % (without condensation)	20–90											
	Temperature °C, humidity % (during storage)	-20 ~ +85, 10–95											
	Permissible vibration, Hz	10~500 Hz, 2G 10 min. / 1 cycle, 60 min. each along the X, Y, Z axes											
Electrical equipment safety	Breakdown voltage, I/P-O/P, kV	3	3	3	3	1,5	1,5	1,5	1,5	1,5	1,5	1,5	1,5
	Breakdown voltages, I/P-FG, kV	1,5											
	Breakdown voltage, O/P-FG, kV	0,5											
	Minimum insulation resistance at 500 V DC, I/P-O/P, I/P-FG, O/P-FG, MOhm	100											
	Electromagnetic interference radiation	Complies with the requirements of EN55022 (CISPR22) Class B											
	Harmonic current components	Complies with the requirements of EN61000-3-2,-3											
	EMC resistance	Complies with the requirements of EN61000-4-2,-3,-4,-5; ENV50204, EN55024, application in industrial areas, conformity criterion A											
Other	Case protection degree ((from the front panel)	IP20											
	Minimum operating time for failure at a temperature of 25 °C, thousand hours	440	440	360	210	200	200	300	300	300	290	340	200
	Power good indication	Yes											
	Output voltage adjustment (+V ADJ)	Yes											
	«Dry» contacts	No	No	No	No	No	No	Yes	Yes	Yes	Yes	Yes	No

Power suppliy units meet the safety requirements against electric current in protection class I or II according to GOST IEC 60950-1-2014. The service life under normal operating conditions is at least 10 years.

	Parameter	Parameter values by model																					
		LRS-24											LRS-12										
Output	Output power, W	35	50	60	75	100	120	150	200	250	350	400	35	50	60	75	100	120	150	200	250	350	400
	Rated output voltage, V	24											12										
	Output voltage range, V	21,6~26,4											10,8–13,2										
	Rated output current, A	1,5	2,2	2,5	3,2	4,5	5	6,5	8,5	10	14,6	16,6	3	4,2	5	6	8,5	10	12,5	17	20	29	33
	Output current range, A	0–1,5	0–2,2	0–2,5	0–3,2	0–4,5	0–5	0–6,5	0–8,5	0–10	0–14,6	0–16,6	0–3	0–4,2	0–5	0–6	0–8,5	0–10	0–12,5	0–17	0–20	0–29	0–33
	Output voltage setting time, ms 230 V	1000							1300				1000							1300			
	Output voltage setting time, ms 115 V	2000							1300				2000							1300			
	Output voltage holding time, ms 230 V	20	20	30	30	20	20	10	10	10	10	10	20	20	30	30	20	20	10	10	10	10	10
	Output voltage holding time, ms 115 V	8	8	0	0	0	0	0	0	0	0	0	8	8	0	0	0	0	0	0	0	0	0
	Maximum output voltage error, %	1																					
Input	AC input voltage, V	85–264																					
	DC input voltage, V	90–132																					
	AC input voltage frequency, Hz	47–63																					
	Efficiency, %	88	88	88,5	88,5	88,5	88,5	88	88	88	86	86	82	83	83	86	86	86	85	86	87	83,5	83,5
	Network current consumption, A 230 V	0,42	0,56	0,56	0,85	1,3	1,3	1,6	2	2,3	3,4	3,4	0,42	0,56	0,56	0,85	1,3	1,3	1,6	2	2,3	3,4	3,4
	Network current consumption, A 115 V	0,7	0,95	0,95	1,4	2,2	2,2	2,8	3,5	4	6,5	6,5	0,7	0,95	0,95	1,4	2,2	2,2	2,8	3,5	4	6,5	6,5
	Starting current, A 230 V	45	45	45	50	50	50	60	60	60	60	60	45	45	45	50	50	50	60	60	60	60	60
	Starting current, A 115 V	45	45	45	50	50	50	60	60	60	60	60	45	45	45	50	50	50	60	60	60	60	60
Protection	Current (power) protection, %	105–150																					
	Output overvoltage protection, V	30–36																					
Environment	Operating temperature, °C	-20 ~ +70																					
	Relative humidity, % (without condensation)	20–90																					
	Temperature °C, humidity % (during storage)	-40 ~ +85 10–95																					
	Permissible vibration, Hz	10~500 Hz, 2G 10 min. / 1 cycle, 60 min. each along the X, Y, Z axes																					
Electrical equipment safety	Breakdown voltage, I/P-O/P, kV	1,5	1,5	1,5	1,5	1,5	1,5	1,5	1,5	1,5	1,5	1,5	1,5	1,5	1,5	1,5	1,5	1,5	1,5	1,5	1,5	1,5	1,5
	Breakdown voltages, I/P-FG, kV	1,5																					
	Breakdown voltage, O/P-FG, kV	0,5																					
	Minimum insulation resistance at 500 V DC, I/P-O/P, I/P-FG, O/P-FG, MOhm	100																					
	Electromagnetic interference radiation	Complies with the requirements of EN55022 (CISPR22) Class B																					
	Harmonic current components	Complies with the requirements of EN61000-3-2,-3																					
	EMC resistance	Complies with the requirements of EN61000-4-2,-3,-4,-5; ENV50204, EN55024, application in industrial areas, conformity criterion A																					
Other	Case protection degree (from the front panel)	IP20																					
	Minimum operating time for failure at a temperature of 25 °C, thousand hours	763	645	645	681	720	648	648	347	347	327	327	763	645	645	681	720	648	648	347	347	327	327
	Power good indication	Yes																					
	Output voltage adjustment (+V ADJ)	Yes																					
	«Dry» contacts	No																					

Items

Appearance	Product name	Output power, W	Output current, A	Code
	OptiPower DR-15-24-1	15	0,63	284543
	OptiPower DR-30-24-1	30	1,25	284544
	OptiPower DR-45-24-1	45	2	284545
	OptiPower DR-60-24-1	60	2,5	284546
	OptiPower DR-75-24-1	75	3,2	284547
	OptiPower DR-120-24-1	120	5	284548
	OptiPower DRP-240-24-1	240	0,42	284549
	OptiPower MDR-10-24-1	10	1	284538
	OptiPower MDR-20-24-1	20	1,7	284539
	OptiPower MDR-40-24-1	40	2,5	284540
	OptiPower MDR-60-24-1	60	4	284541
	OptiPower MDR-100-24-1	100	10	284542
	OptiPower LRS 35-24 1.5A	35	1,5	328865
	OptiPower LRS 50-24 2.2A	50	2,2	328872
	OptiPower LRS 60-24 2.5A	60	2,5	328875
	OptiPower LRS 75-24 3.5A	75	3,2	328877
	OptiPower LRS 100-24 4.5A	100	4,5	328879
	OptiPower LRS 120-24 5A	120	5	328881
	OptiPower LRS 150-24 6.5A	150	6,5	328883
	OptiPower LRS 200-24 8.8A	200	8,5	328885
	OptiPower LRS 250-24 10.4A	250	10	328887
	OptiPower LRS 350-24 14.6A	350	14,6	328889
	OptiPower LRS 400-24 16.6A	400	16,6	328891
	OptiPower LRS 35-12 3A	35	3	328864
	OptiPower LRS 50-12 4.2A	50	4,2	328868
	OptiPower LRS 60-12 5A	60	5	328873
	OptiPower LRS 75-12 6A	75	6	328876
	OptiPower LRS 100-12 8.5A	100	8,5	328878
	OptiPower LRS 120-12 10A	120	10	328880
	OptiPower LRS 150-12 12.5A	150	12,5	328882
	OptiPower LRS 200-12 17A	200	17	328884
	OptiPower LRS 250-12 21A	250	20	328886
	OptiPower LRS 350-12 29A	350	29	328888
	OptiPower LRS 400-12 33.3A	400	33	328890

Mounting and connection

Power supply unit connection diagram

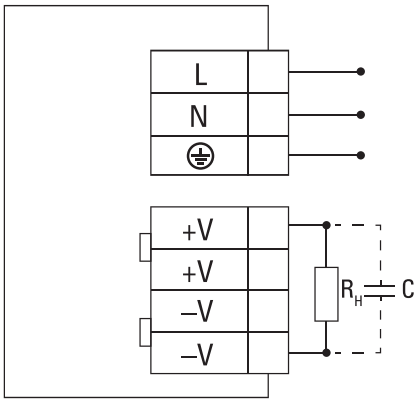

Power supply units can be mounted on standard din-rails of types TS-35/7.5 or TS-35/15.

Overall dimensions (mm)

Power supply unit MDR-10, 20

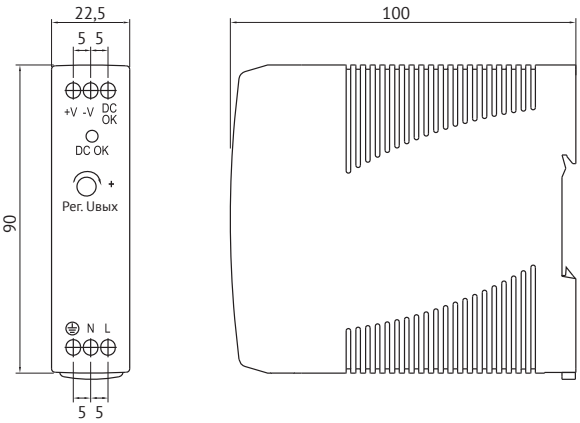

Power supply unit MDR-40, 60

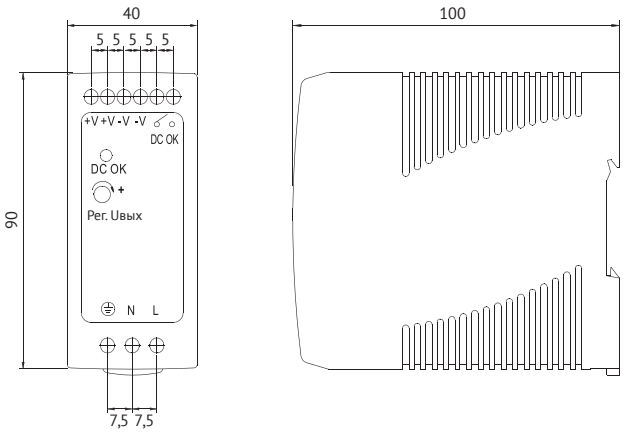

Power supply unit MDR-100

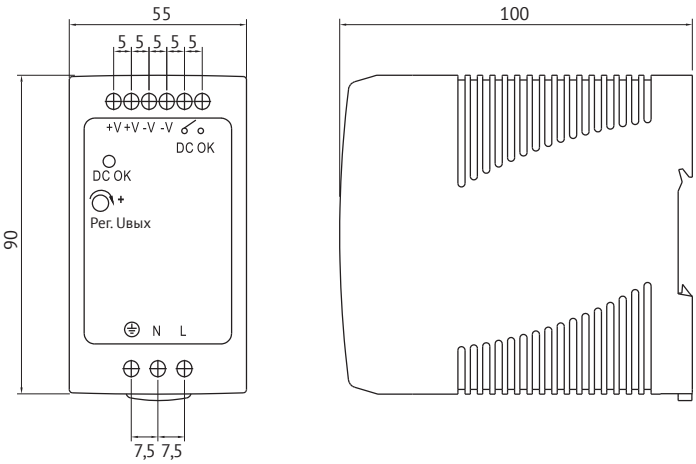

Power supply unit DR-15

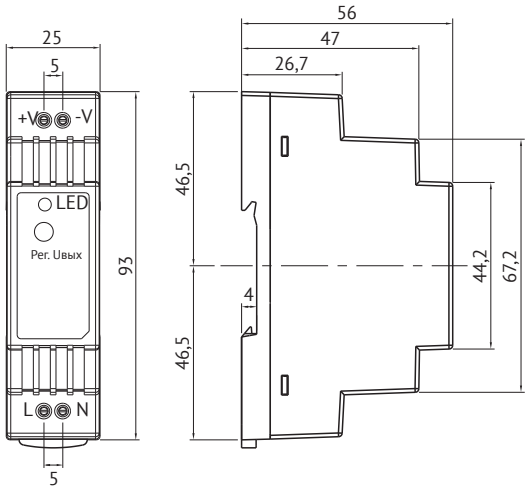

Power supply unit DR-30, 45, 60

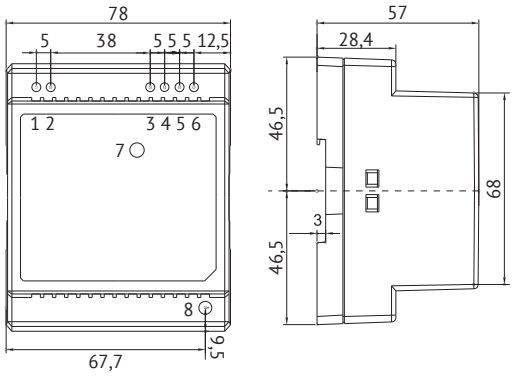

Terminal No	Purpose	Terminal No	Purpose
1	AC/N	5, 6	-V
2	AC/L	7	LED
3, 4	+V	8	Uout adj.

Power supply unit DR-75

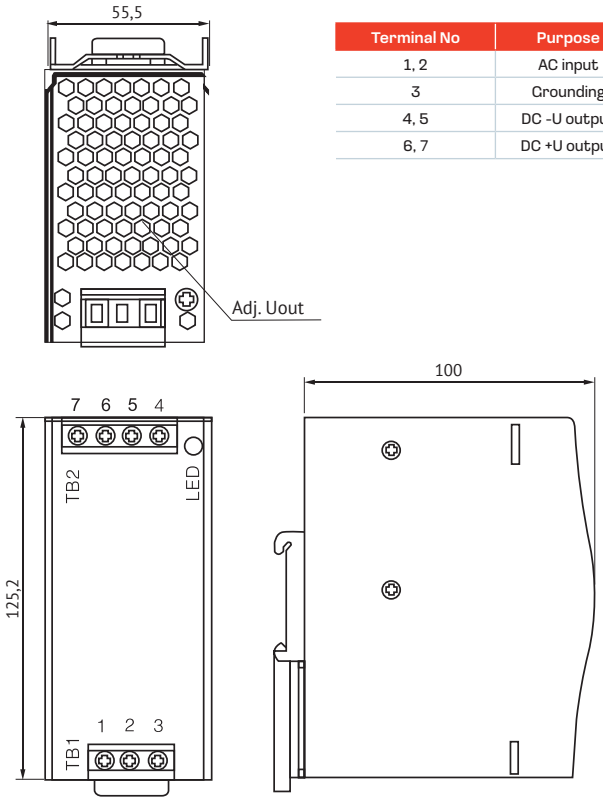

Terminal No	Purpose
1, 2	AC input
3	Grounding
4, 5	DC -U output
6, 7	DC +U output

Power supply unit DR-120

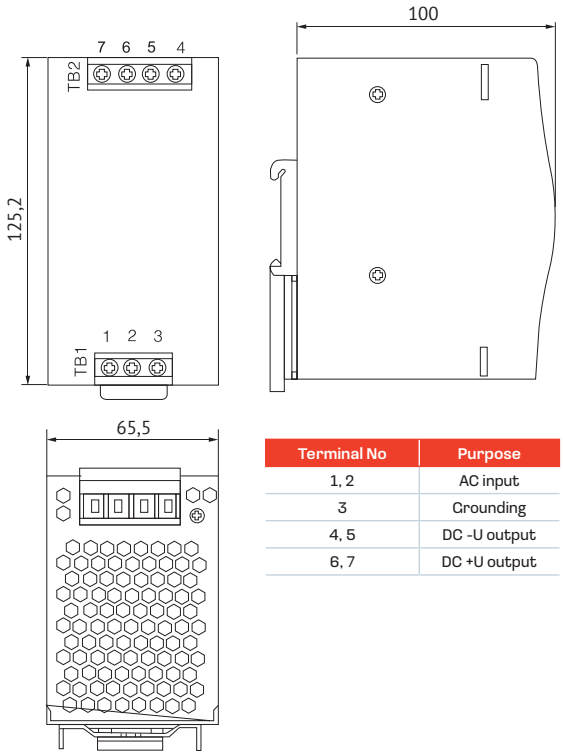

Terminal No	Purpose
1, 2	AC input
3	Grounding
4, 5	DC -U output
6, 7	DC +U output

Power supply unit DR-240

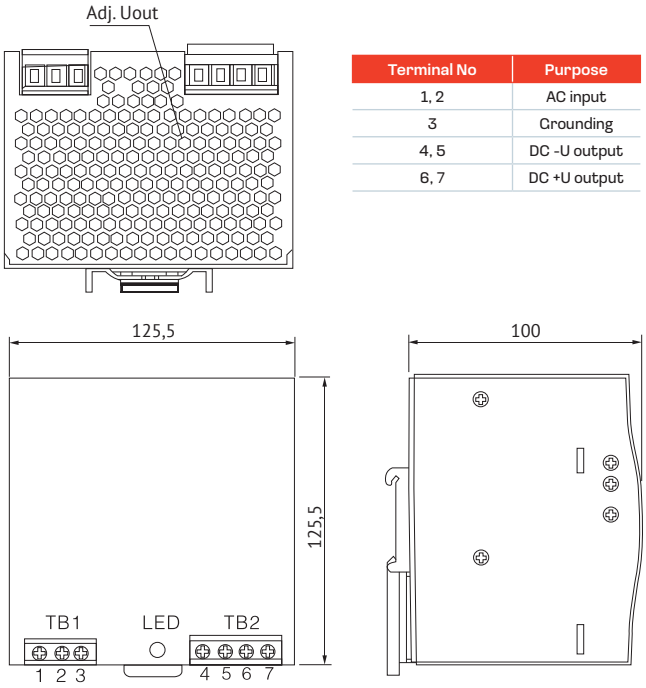

Terminal No	Purpose
1, 2	AC input
3	Grounding
4, 5	DC -U output
6, 7	DC +U output

OptiMat
Power circuit breakers

OptiMat E Molded case circuit breakers 16 to 250 A 142

OptiMat D Molded case circuit breakers 40 to 1600 A 155

OptiMat A Air circuit breakers 630 to 6300 A 200

OptiMat power circuit breakers up to 6300 A are suitable for operation in the Russian climate, and their selectivity ensures reliable protection of facilities. They have certificates from RCS (Russian Shipping Classification Society), RMRS (Russian Maritime Register of Shipping) and a declaration of conformity from Russian Railways.

Molded case circuit breakers

OptiMat E100 142

In (A):
16 to 100
Ii (A): от 350
до 1000 A
Icu (kA): 15; 20

OptiMat E250 142

In (A):
125 to 250
Ii: 10 In
Icu (kA): 18; 25; 40

OptiMat D100, D160, D250 155

In (A):
40 to 250
Electronic release
with protections:
Ir, tr, Isd, tsd, Ii
Ir: 0,4 to 1,0 In
Isd: 1,5 to 10 Ir
Icu (kA): 40; 65

OptiMat D400, D630 155

In (A): 160 to 630
Electronic release with protections: Ir, tr, Isd, tsd, Ii, Ig, tg
Ir: 0,4 to 1,0 In
Isd: 1,5 to 10 Ir
Icu (kA): 40; 65

OptiMat D800, D1000, D1250, D1600 155

In (A): 320 to 1600
Electronic release with protections: Ir, tr, Isd, tsd, Ii, Ig, tg
Ir: 0,4 to 1,0 In
Isd: 1,5 to 10 Ir
Icu (kA): 50; 85

Air circuit breakers

OptiMat A size S1 200

In (A):
400 to 1600
Ue (V): 690
Icu (kA): 50

OptiMat A size S2 200

In (A):
от 630 до 2000
Ue (V): 690
Icu (kA):
65 to 85

OptiMat A size S4 200

In (A):
2500; 3200; 4000
Ue (V): 690
Icu (kA): 100

OptiMat A size S5, S6 200

In (A): 5000; 6300
Ue (V): 400
Icu (kA): 120

OptiMat A size S6 200

In (A): 5000; 6300
Ue (V): 690
Icu (kA): 150

OptiMat
↗ Power circuit breakers

Selection guide

Circuit breaker series																			
		OptiMat E100		OptiMat E250			OptiMat D100		OptiMat D250		OptiMat D400		OptiMat D630		OptiMat D1000		OptiMat D1600	
Standards		GOST R 50030.2					GOST R 50030.2											
Number of poles		3					3											
Rated operating voltage Ue, V		690					690											
Rated insulation voltage Ui, V		690		690			800											
Rated impulse withstand voltage Uimp, kV		6		6			8											
Application category		A		A			A				A (MR1), B (MR2)				B			
Suitability for disconnection		yes																
Control																		
Manual	control buttons	-		-			-								-			
	control lever	+		+			+								+			
	standard or rotary remote handle	+		+			+								-			
Electrical	motor drive	-		-			+								+			
Design																		
Fixed	front mounting	+		+			+								+			
	rear mounting	-		-			+								+			
Plug-in		-		-			+								-			
Withdrawable	front mounting	-		-			+								+			
	rear mounting						+								+			
Rated and limiting parameters of the main circuit of circuit breakers																		
Rated current In, A		16, 25, 32, 40, 50, 63, 80, 100		125, 160, 200, 250			100		250		400		630		1000		1600	
Overcurrent release		Thermalmagnetic		Thermalmagnetic			Microprocessor											
Protection types / setpoint values		Ir, Isd / fixed		Ir, Isd / fixed			Ir, tr, Isd, tsd / adjustable Ii / fixed				Ir, tr, Isd, tsd, Ig, tg / adjustable Ii / fixed				Ir, tr, Isd, tsd, Ig, tg / adjustable Ii / fixed			
Rated frequency, Hz		50		50			50											
Levels of breaking capacity		L	N	L	N	H	N	H	N	H	N	H	N	H	N	H	N	H
Rated limiting breaking capacity Icu, kA	Ue 400 V	10 [1]	20 [2]	18	25	40	40	65	40	65	40	65	40	65	50	85	50	85
	Ue 690 V	5	5	7,5	10	12	8	10	8	10	8	10	8	10	20	30	20	30
Rated operating capacity Ics, % from Icu		50		50			100											

* except 3200 and 4000 A
[1] For circuit breakers with rated currents: 16, 20 A 6 kA; 25 A 8 kA.
[2] For circuit breakers with rated currents: 16...25 A not available; 32 A 15 kA.

Power circuit breakers of the modern generation are designed to conduct current in normal conditions and provide protection for electrical installations during overloads, short circuits and single-phase short circuits, as well as for prompt circuit switching on and off of electrical circuits.

Using KEAZ power circuit breakers with thermomagnetic and electronic overcurrent releases can satisfy almost any need for protection and gives complete freedom in the design and construction of electrical installations with optimal characteristics.

The wide range of existing accessories makes your decision about the use of power circuit breakers by KEAZ convenient and reliable.

	OptiMat A-630...1600-S1	OptiMat A-630...2000-S2	OptiMat A-2500...4000-S4	OptiMat A-5000-S5; OptiMat A-6300-S6
	GOST R 50030.2			
	3	3,4		3
	690			400
	690	1000		
	8	12		
	B			
	yes			
	+			
	-			
	-			
	+			
	-	+*		-
	+			
	-			
	-	+*		-
	+			
	630, 800, 1000, 1250, 1600	630, 800, 1000, 1250, 1600, 2000	2500, 3200, 4000	5000, 6300
	Microprocessor			
	Ir, tr, Isd, tsd, Ig, tg, Ii / adjustable			
	50	50/60		50
	no			
	50	85	100	-
	25	65	85	120
	80	100		80

Protection types:
Ir overload protection
tr time delay for overload protection
Isd short circuit protection
tsd time delay for short circuit protection
Ii instantaneous short circuit protection
Ig earth fault protection
tg time delay for earth fault protection

OptiMat E Molded case circuit breakers for currents from 16 to 250 A

OptiMat E molded case circuit breaker series is represented by reliable and simple protection devices designed for low-voltage distribution systems, for current conduction in normal mode and current interruption in case of short circuits, overloads and up to 30 operative switching on and off of electric circuits per day. Circuit breakers approved by the Russian Maritime Register of Shipping (hereinafter RS) and the Russian River Register (hereinafter RRR) are designed to protect electrical equipment on ships and port infrastructure. Circuit breakers approved by the NPP are designed to protect nuclear power stations.

Designation

OptiMat E 100 L 100 UHL3 AES

1 2 3 4 5 6 7

1	Series	OptiMat			
2	Configuration	E — molded case circuit breakers			
3	Rated current In, A	100		250	
4	Limiting breaking capacity, kA	L — 15[1)] N — 20[2)]		L — 18 N — 25 H — 40	
5	Thermomagnetic release rated current, A	16, 20, 25, 32, 40, 50, 63, 80, 100		125, 160, 200, 250	
6	Designation of climatic and placement category	UHL3 (international TC3)		OM4 (international UM4) for circuit breakers with RS approval	
7	Approval type, delivery terms	REC- RS or RRR approval	AES - for nuclear power plants	RR - for Russian railways	when absent - QCD approval

[1)] Breakers for rated current: 16, 20 A - 6 kA; 25 A - 8 kA.
[2)] Breakers for rated current: 16...25 A - not available; 32 A - 15 kA.

Basic configuration of OptiMat D circuit breakers includes:
- inter-pole partitions (2 pieces);
- attaching screws kit.

Codes indicated in the tables can be amended. If you did not find the necessary codes on the website, please call KEAZ customer service.

Series advantages

Optimal protection from both short circuits and overload with high efficiency using only two dimensions. Optimal level of limiting switching capacity (LSC), 10 to 40 kA, is used on most facilities.

Conducting customer training to improve the efficiency of KEAZ Optima appliances operation. Technical consulting for design and operation.

Optimal range of optional accessories extends the functionality of circuit breakers and facilitates the operation of electrical installations.

The location in the central part of Russia and fully domestic production facilities allow us to fulfill equipment delivery in the shortest possible time.

Each unit undergoes multistage quality control from assembling to the finished goods warehouse. 5 years warranty.

OptiMat E circuit breakers can be operated from -60 to +40 °C.

The use of modern materials: silver-containing contacts reduce transient resistances, increase welding wear resistance and exclude welding susceptibility; non-combustible plastic with improved electrical insulation properties and arc resistance.

It's possible to install the breaker in any spatial position, with power supply from the top and bottom, without compromising technical characteristics of the breaker.

Items

Appearance	Rated current (In), A	Product name (general industrial design)	Code	Product name (RS-approved version)	Code	Product name (RRR-approved version)	Code	Weight, kg
OptiMat E100	16...100	OptiMat E100L016-UHL3	100000	OptiMat E100L016-OM4-REG	273882	OptiMat E100L016-UHL3-REG	273883	0,8
		OptiMat E100L020-UHL3	100001	OptiMat E100L020-OM4-REG	273884	OptiMat E100L020-UHL3-REG	273885	
		OptiMat E100L025-UHL3	100002	OptiMat E100L025-OM4-REG	273886	OptiMat E100L025-UHL3-REG	273887	
		OptiMat E100L032-UHL3	100003	OptiMat E100L032-OM4-REG	273888	OptiMat E100L032-UHL3-REG	273889	
		OptiMat E100L040-UHL3	100004	OptiMat E100L040-OM4-REG	273890	OptiMat E100L040-UHL3-REG	273891	
		OptiMat E100L050-UHL3	100005	OptiMat E100L050-OM4-REG	273892	OptiMat E100L050-UHL3-REG	273893	
		OptiMat E100L063-UHL3	100006	OptiMat E100L063-OM4-REG	273894	OptiMat E100L063-UHL3-REG	273895	
		OptiMat E100L080-UHL3	100007	OptiMat E100L080-OM4-REG	273896	OptiMat E100L080-UHL3-REG	273897	
		OptiMat E100L100-UHL3	100008	OptiMat E100L100-OM4-REG	273898	OptiMat E100L100-UHL3-REG	273899	
		OptiMat E100N032-UHL3	224958	OptiMat E100N032-OM4-REG	273900	OptiMat E100N032-UHL3-REG	273901	
		OptiMat E100N040-UHL3	224959	OptiMat E100N040-OM4-REG	273902	OptiMat E100N040-UHL3-REG	273903	
		OptiMat E100N050-UHL3	224960	OptiMat E100N050-OM4-REG	273904	OptiMat E100N050-UHL3-REG	273905	
		OptiMat E100N063-UHL3	224961	OptiMat E100N063-OM4-REG	273906	OptiMat E100N063-UHL3-REG	273907	
		OptiMat E100N080-UHL3	224962	OptiMat E100N080-OM4-REG	273908	OptiMat E100N080-UHL3-REG	273909	
		OptiMat E100N100-UHL3	224963	OptiMat E100N100-UHL3-REG	273910	OptiMat E100N100-UHL3-REG	273911	
OptiMat E250	125...250	OptiMat E250L125-UHL3	100009	OptiMat E250L125-OM4-REG	273913	OptiMat E250L125-UHL3-REG	273914	1,2
		OptiMat E250L160-UHL3	100010	OptiMat E250L160-OM4-REG	273915	OptiMat E250L160-UHL3-REG	273916	
		OptiMat E250L200-UHL3	100011	OptiMat E250L200-OM4-REG	273917	OptiMat E250L200-UHL3-REG	273918	
		OptiMat E250L250-UHL3	100012	OptiMat E250L250-OM4-REG	273919	OptiMat E250L250-UHL3-REG	273920	
		OptiMat E250N125-UHL3	230652	OptiMat E250N125-OM4-REG	273921	OptiMat E250N125-UHL3-REG	273922	
		OptiMat E250N160-UHL3	230653	OptiMat E250N160-OM4-REG	273923	OptiMat E250N160-UHL3-REG	273924	
		OptiMat E250N200-UHL3	230654	OptiMat E250N200-OM4-REG	273925	OptiMat E250N200-UHL3-REG	273926	
		OptiMat E250N250-UHL3	230655	OptiMat E250N250-OM4-REG	273927	OptiMat E250N250-UHL3-REG	273928	
		OptiMat E250H125-UHL3	230656	OptiMat E250H125-OM4-REG	236194	OptiMat E250H125-UHL3-REG	242899	
		OptiMat E250H160-UHL3	230657	OptiMat E250H160-OM4-REG	236195	OptiMat E250H160-UHL3-REG	242900	
		OptiMat E250H200-UHL3	230658	OptiMat E250H200-OM4-REG	236196	OptiMat E250H200-UHL3-REG	273929	
		OptiMat E250H250-UHL3	230659	OptiMat E250H250-UHL3-REG	236197	OptiMat E250H250-OM4-REG	242902	

Technical specification

Circuit breaker series		OptiMat E100		OptiMat E250		
Main characteristics						
Rated operating voltage Ue, V		690				
Rated insulation voltage Ui, V		690				
Rated impulse withstand voltage Uimp, kV		6				
Application category		A				
Suitability for disconnection		yes				
Number of poles		3				
Control						
Manual	control lever	+		+		
	standard or rotary remote handle	+		+		
Design option						
Fixed with front connection		+		+		
Rated and limiting parameters of the main circuit of circuit breakers						
Rated current In, A		16, 25, 32, 40, 50, 63, 80, 100		125, 160, 200, 250		
Rated frequency, Hz		50/60				
Levels of breaking capacity		L	N	L	N	H
Rated limiting breaking capacity Icu, kA	Ue 400 V	15 [1]	20 [2]	18	25	40
	Ue 690 V	5	5	7,5	10	12
Rated operating capacity Ics, % from Icu		50				
Rated short circuit making capacity Icm, kA	Ue 400 V	17	40	36	52,5	84
	Ue 690 V	8,5	8,5	13	17	24
General wear resistance, cycles		10000		8000		
Electrical wear resistance, cycles		1500		1000		
Devices for protection, indication and measurement						
Short circuits protection	setpoint of the electromagnetic release, A	fixed [3]		10 In		
Overload protection	thermal release setpoint	In				
Supplementary devices for control and signaling						
Auxiliary contacts	left auxiliary contact	+				
	right auxiliary contact	+				
	alarm auxiliary contact	+				
	combined alarm contact (auxiliary contact + alarm auxiliary contact)	+				
Voltage releases	shunt trip	+				
	undervoltage release	+				
Accessories	din-rail adapted	+				
	inter-pole partitions	as a set\can be ordered separately				
	terminal cover	+				
	position locking device (off)	+				
	one-celled terminal sets	+				
Installation and connection						
Connecting copper and aluminum wires and cables section, mm	In ≤ 50 A	2,5–10				
	In ≥ 63 A	10–35				
	125 ≤ In ≤ 250 A			35–120		
Connecting stiff wires with the following section, mm	In ≤ 50 A	2,5–16				
	In ≥ 63 A	10–50				
	125 ≤ In ≤ 250 A			35–150		
Overall dimensions and weight						
Overall dimensions W×H×D, mm		75x130x60		105x165x60		
Weight, kg		0,8		1,2		

[1] Breakers for rated current: 16, 20 A - 6 kA; 25 A - 8 kA.
[2] Breakers for rated current: 16...25 A - not available; 32 A - 15 kA.
[3] Breakers for rated current: 16 A — 350; 20...32 A — 400; 40...100 A — 10 In.

Current and time characteristics

OptiMat E100

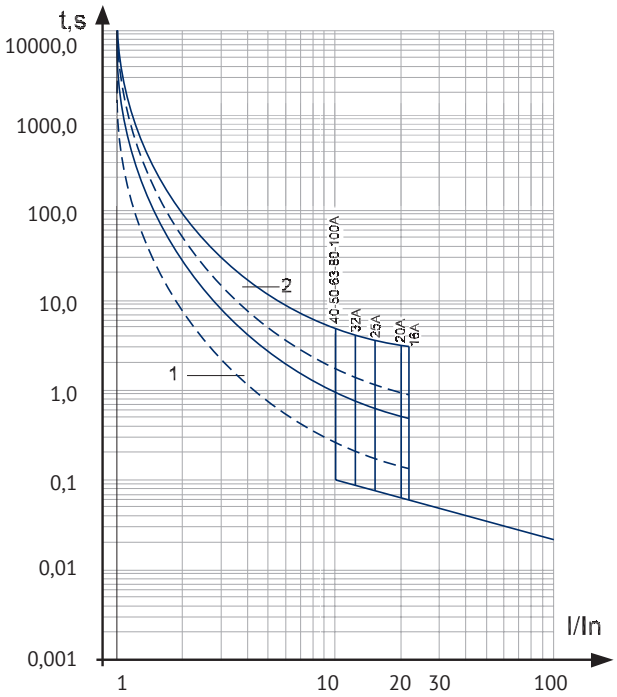

1 — working zone of an overcurrent thermal release, measured in hot state
2 — working zone of an overcurrent thermal release, measured in cold state

OptiMat E250

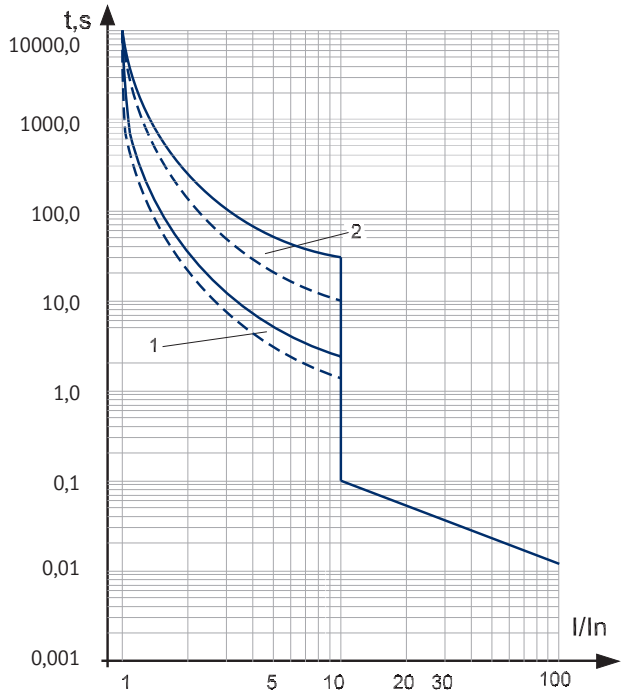

1 — working zone of an overcurrent thermal release, measured in hot state
2 — working zone of an overcurrent thermal release, measured in cold state

Rated operating current in accordance with ambient temperature

OptiMat E circuit breakers are equipped with non-regulated thermomagnetic releases. With external temperature of +30 °C (+45 °C in case of RS-approved (Register of Shipping) breakers), the devices have I = In.
Circuit breaker tripping time is defined by its tripping curve. Dependence of rated operating currents of OptiMat E circuit breakers from the ambient temperature is shown on the picture below.

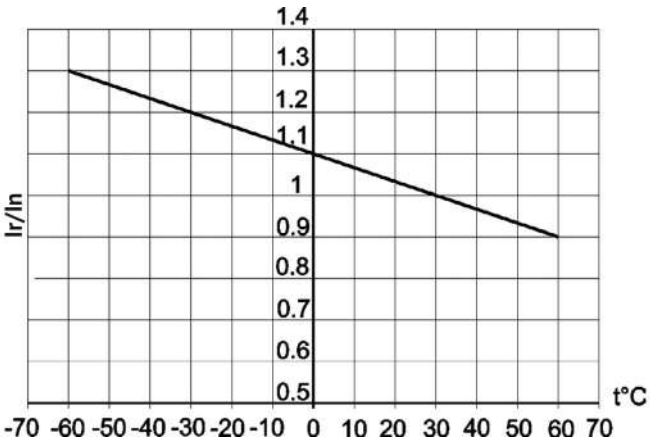

For general purpose circuit breakers with RRR (Russian River Register) approval

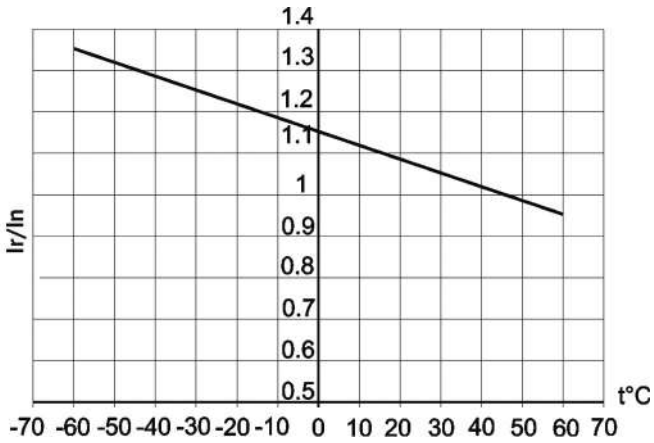

For circuit breakers with RS approval

Configuration

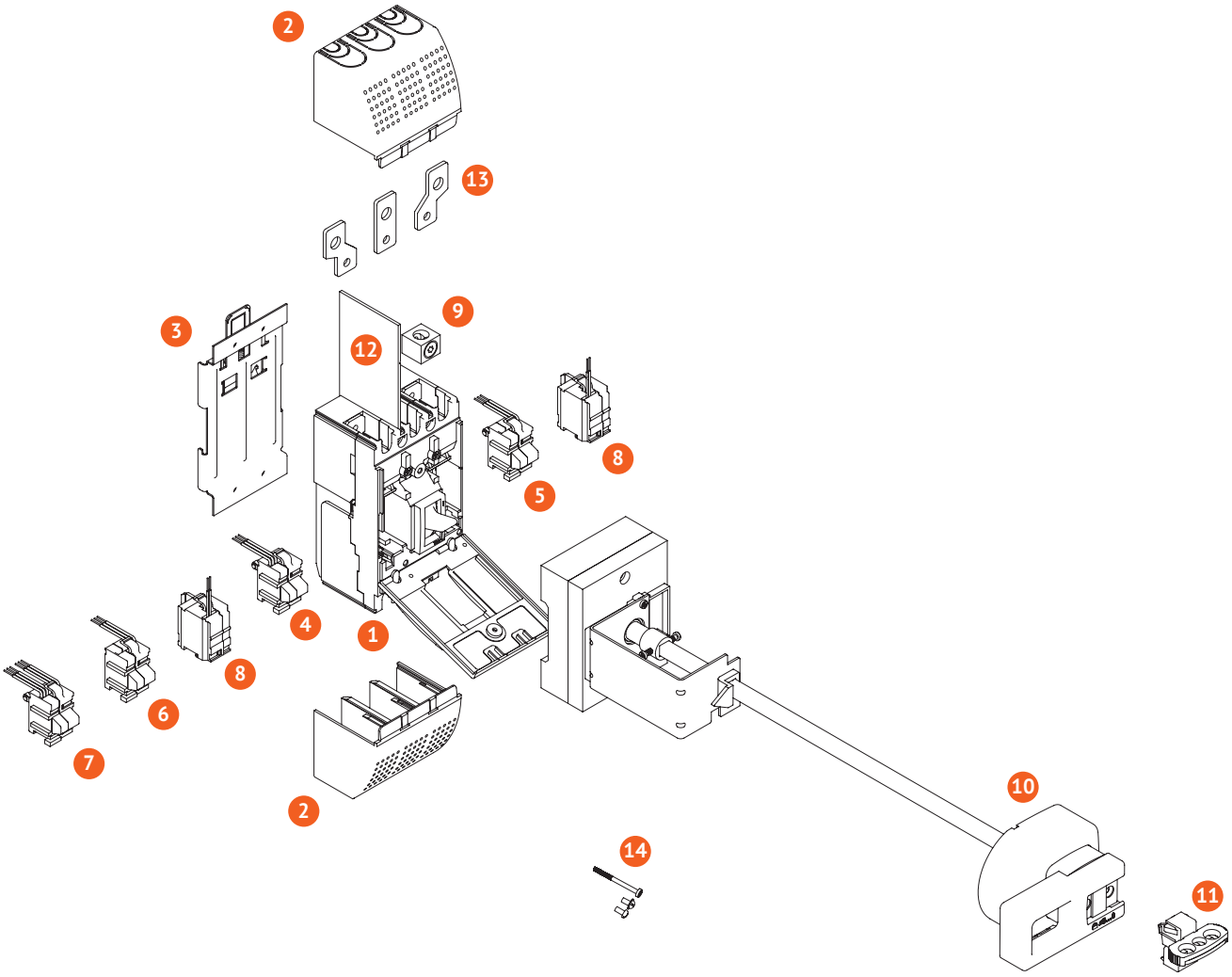

1. Circuit breaker*
2. Terminal covers
3. Din-rail adapter
4. Auxiliary contact (left)
5. Auxiliary contact (right)
6. Alarm auxiliary contact
7. Combined alarm contact with emergency signal (auxiliary contact + alarm auxiliary contact)
8. Shunt trip
9. Terminal sets for external conductors
10. Rotary remote handle
11. Position locking device (off)
12. Inter-pole partitions*
13. Pole extenders
14. Fastening screws set*

* Standard equipment set

Accessories and auxiliary devices

OptiMat E Shunt trip

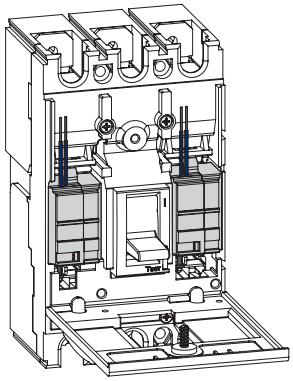

Shunt trip is designed for circuit breaker remote opening. Unified for OptiMat E100 and OptiMat E250 circuit breakers. Installed under the front panel of the circuit breaker in its own cubicle.
Shunt trip causes circuit breaker opening in any operating conditions, when supply voltage remains within the range from 70 to 110 % Ue. It has a built-in contact that removes power from the coil after the shunt trip is triggered.

Operating voltage Ue, V		12AC/DC	24AC/DC	48AC/DC	110AC	230AC	400AC
Operating voltage range		(0,7–1,1) Ue					
Power consumption, VA		200		400			
Operating mode		Short-time (pulse)					
Break time, ms		35					
Code	general purpose industrial version	100031	100032	100033	100034	100035	100036
	RRR acceptance	273960	273964	273968	273958	273962	273966
	RS acceptance	273959	273963	273967	273957	273961	273965

Auxiliary contacts

They are designed to transfer signals about circuit breaker operation and used for sending alarms, conduct electric blocking, ar range relay protection, etc. Unified for OptiMat E100 and OptiMat E250 circuit breakers. They are installed under the circuit breaker's face panel in their own cell.

	Product name	Rated operating current (Ir) at the supply voltage, A						Code		
		(125–250) AC, 50 Hz	30 DC	50 DC	75 DC	125 DC	220 DC	general purpose industrial version	RRR acceptance	RS acceptance
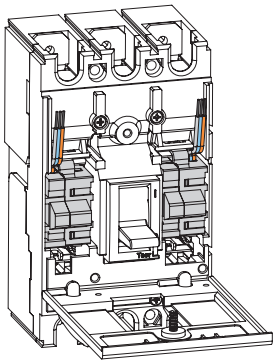	Left auxiliary contact OptiMat E-UHL3	5	5	1	0,75	0,5	0,25	1000018	273944	273943
	Right auxiliary contact OptiMat E-UHL3	5	5	1	0,75	0,5	0,25	100019	273946	273945
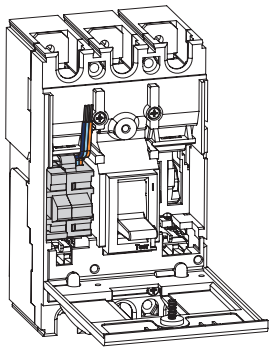	Alarm auxiliary contact OptiMat E-UHL3	5	5	1	0,75	0,5	0,25	100020	273948	273947
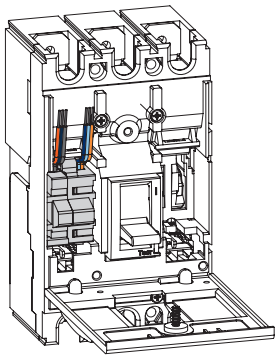	Combined indicating signal OptiMat E-UHL3	5	5	1	0,75	0,5	0,25	100021	273950	273949

Additional devices for quick and save installation and operation

For OptiMat E100	Product name	Code		
		general purpose industrial version	RRR acceptance	RS acceptance
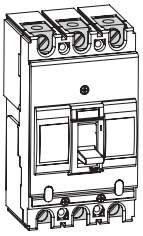	Terminal set OptiMat E100-16..50A-UHL3 — 3 pcs.	100015	273938	273937
	Terminal set OptiMat E100-63..100A-UHL3 — 3 pcs.	100016	273940	273939
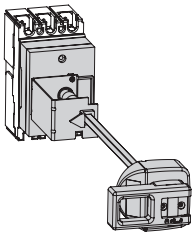	Rotary remote handle OptiMat E100-UHL3	100037	242909	236204
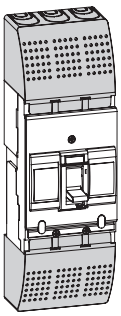	Terminal cover OptiMat E100-UHL3 — 2 pcs.	100022	273952	273951
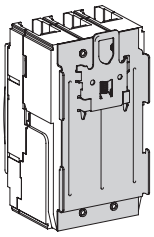	Din-rail adapter OptiMat E100-UHL3	100013	273933	273912
For OptiMat E250				
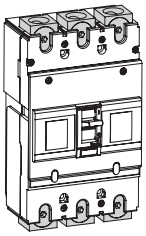	Terminal set OptiMat E250-UHL3 — 3 pcs.	100017	273942	273941
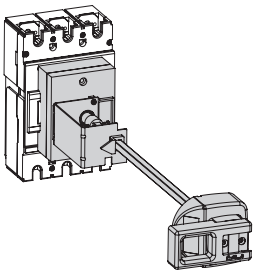	Rotary remote handle OptiMat E250-UHL3	100039	242910	236205

	Product name	Code		
		general purpose industrial version	RRR acceptance	RS acceptance
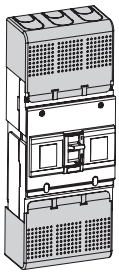	Terminal cover OptiMat E250-UHL3 — 2 pcs.	100023	273954	273953
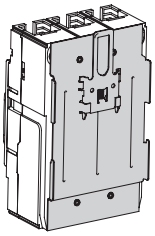	Din-rail adapter OptiMat E250-UHL3	100014	273936	273935
General				
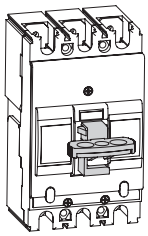	Position locking device (off) OptiMat E-UHL3	100041	273970	273969
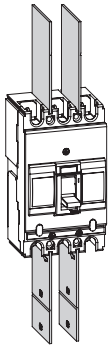	Inter-pole partitions OptiMat E-UHL3 — 2 pcs.	100024	273956	273955
	Pole extenders OptiMat E100-16...50-UHL3 — 3 pcs. Pole extenders OptiMat E100-63...100-UHL3 — 3 pcs.	293113 292988		300257 300264
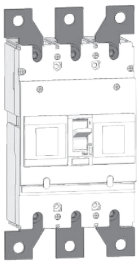	Pole extenders OptiMat E250-UHL3 — 3 pcs.	272862	272863	272864

Overall dimensions (mm)

OptiMat E100

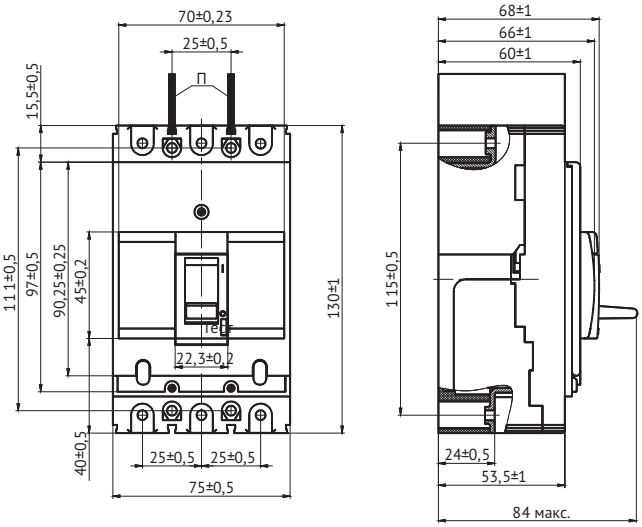

OptiMat E100 with pole extenders

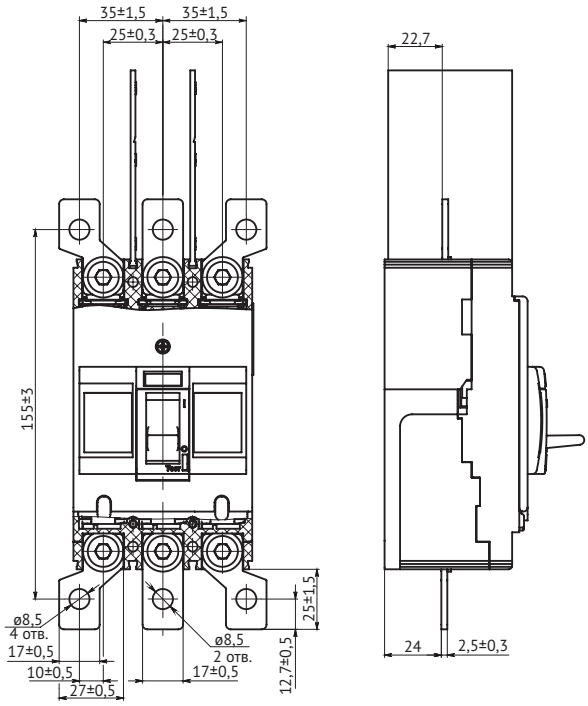

OptiMat E250

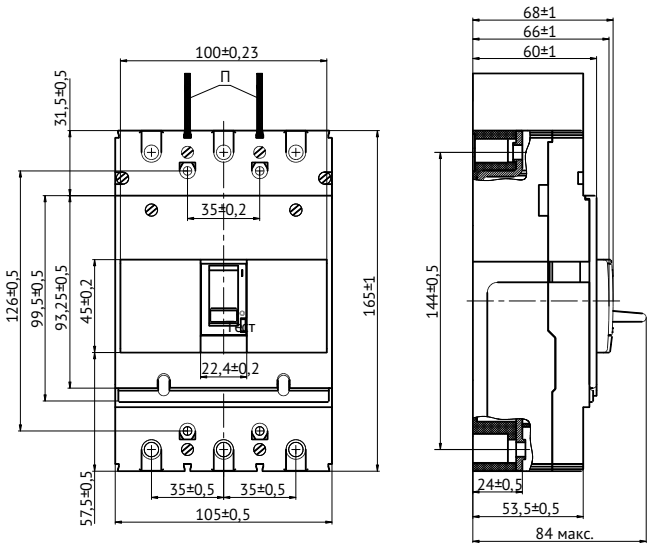

OptiMat E250 with pole extenders

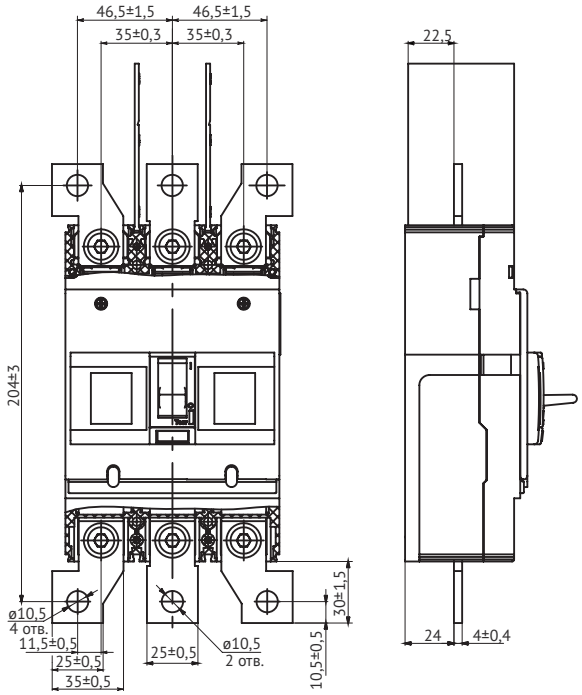

П — inter-pole partitions

Models for cabinet marking and drilling

OptiMat E100

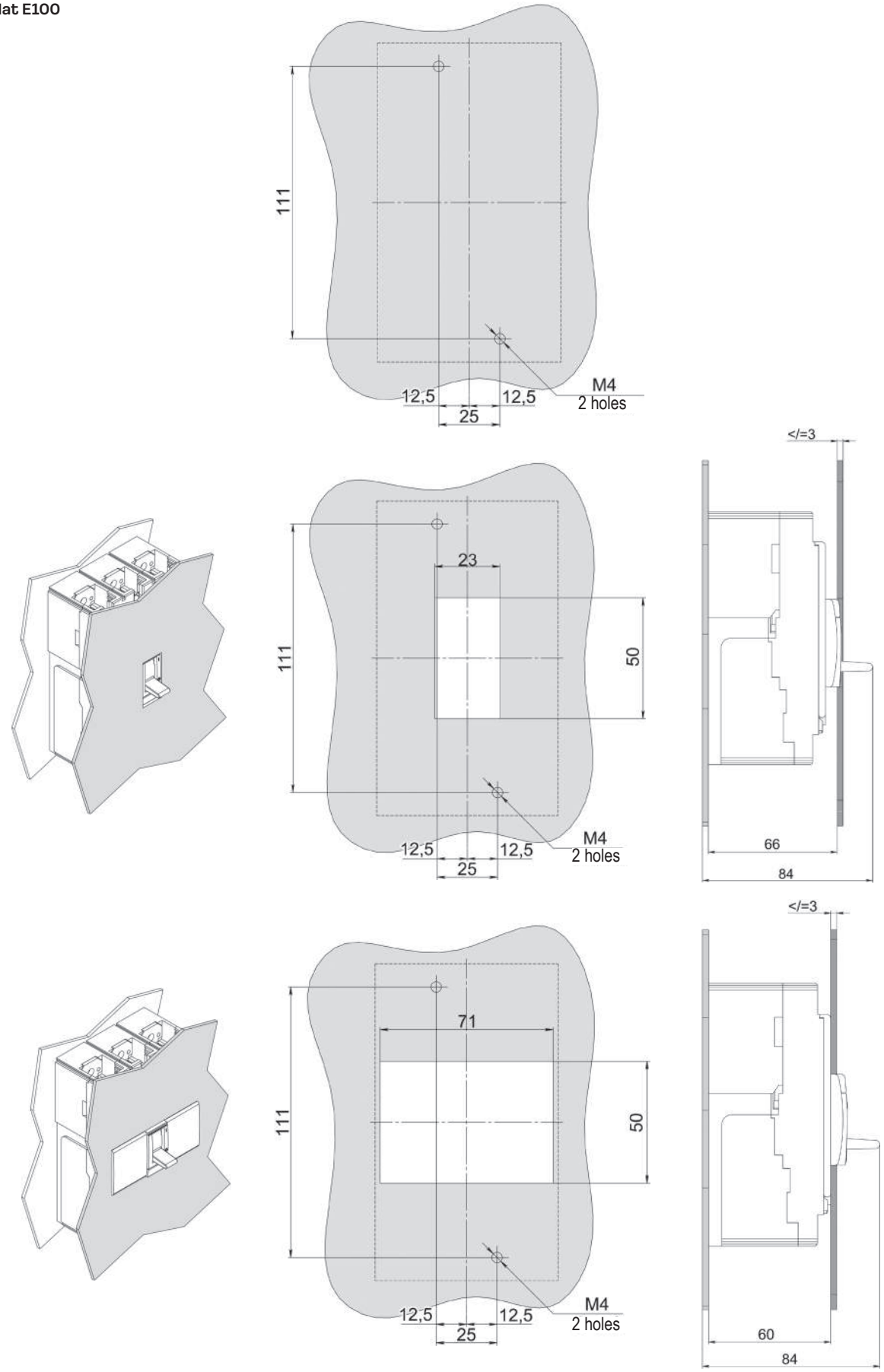

OptiMat E250

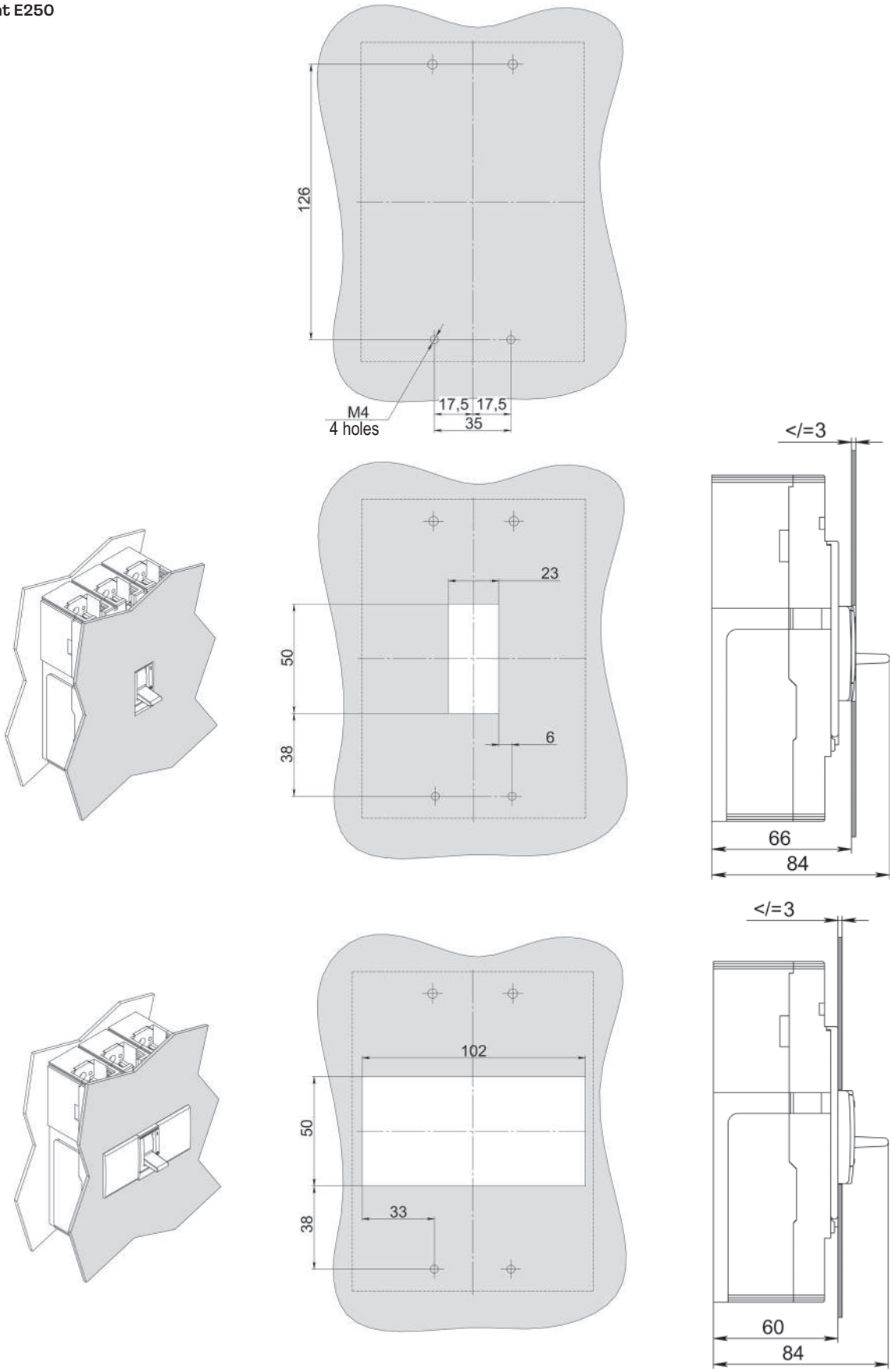

Installation versions of rotary remote handle OptiMat E100 and E250

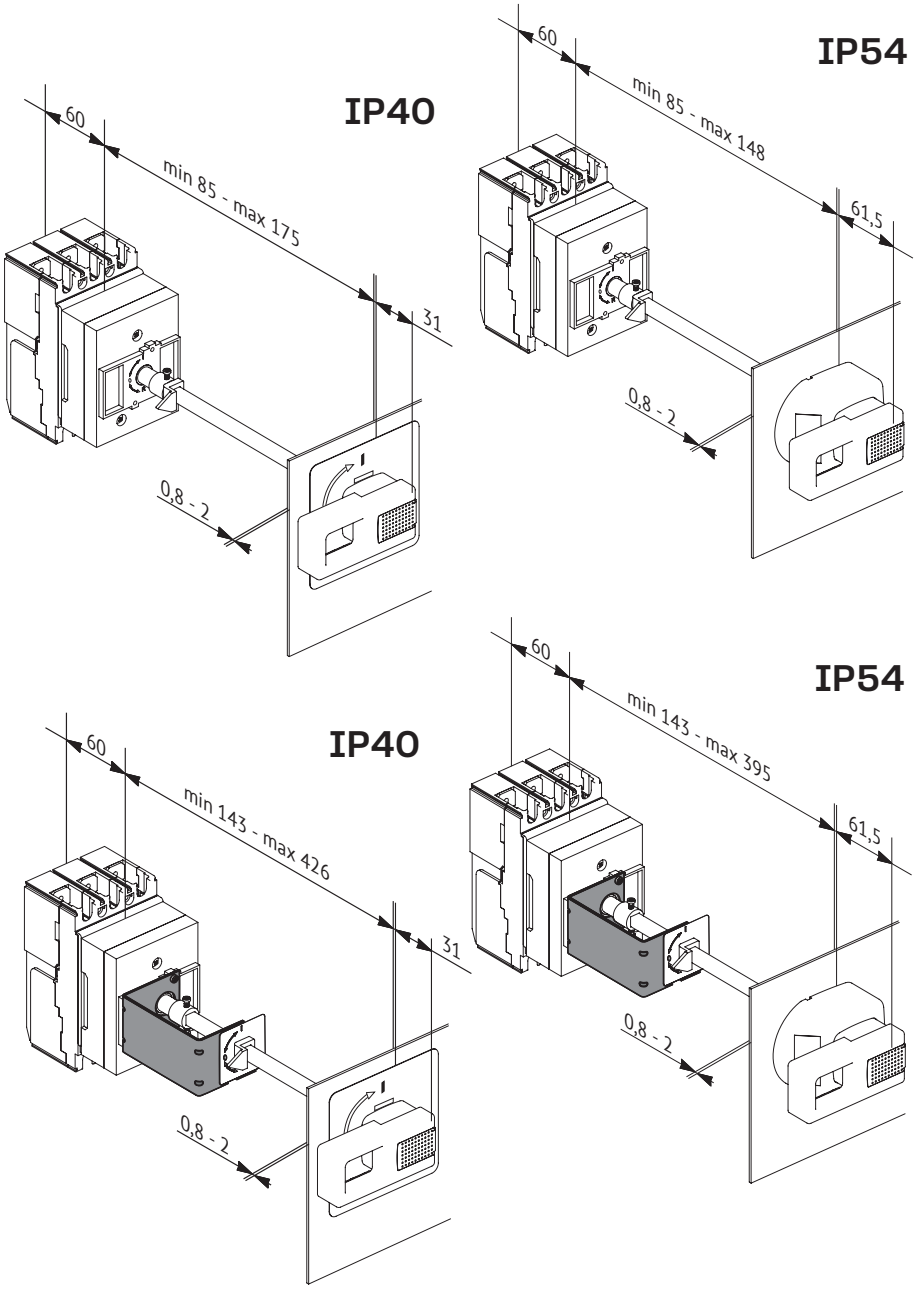

Circuit diagrams

Circuit breaker without supplementary assembly elements

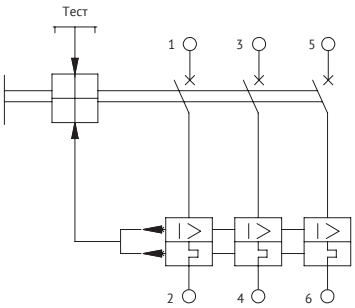

Supplementary assembly elements

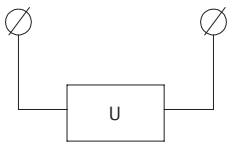

shunt trip

Auxiliary contacts

Auxiliary contacts

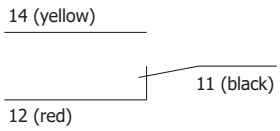

Alarm auxiliary contacts

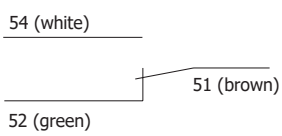

Alarm combined contacts

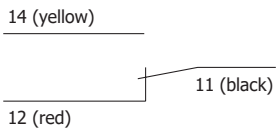

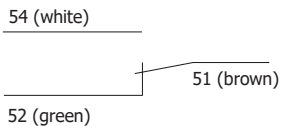

Position of alarm auxiliary contacts and combined alarm contacts are given for circuit breaker in the «off» position after automatic operation.

Contact	«Tripped» position	Position «automatic shutdown»	Position «Manual shutdown»
14–11 yellow-black	closed	open	open
12–11 red-black	open	closed	closed
54–51 white-brown	closed	open	closed
52–51 green-brown	open	closed	open

Methods of connection of the external conductors of the main circuit of the circuit breaker. Form and size of the connected busbars

Busbar connection or a cable core connection with wiring terminal connector

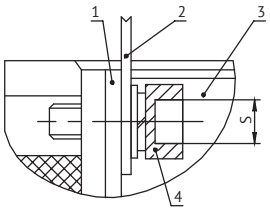

Cable connection without wiring terminal connector

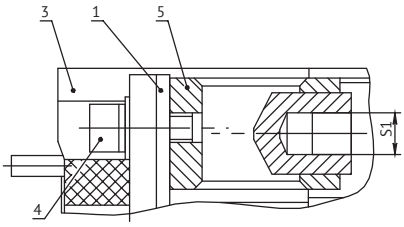

1. Terminal of the breaker
2. Busbar (or wiring terminal connector)
3. Breaker
4. Screwed connection
5. Single connector

Series	Rated current	S	S1
OptiMat E100	In = 16...50 A	4	slot
	In = 63...100 A	6	slot
OptiMat E250	In = 100...250 A	6	5

Form and size of the connected switch bus, maximum section

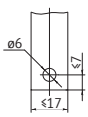

OptiMat E100 16...50A

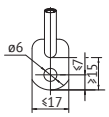

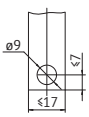

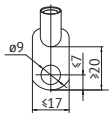

OptiMat E100 63...100A

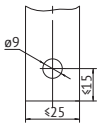

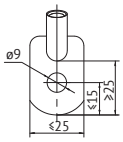

OptiMat E100 with pole extenders

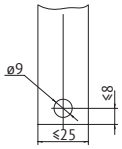

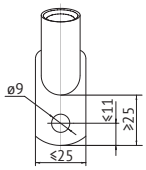

OptiMat E250

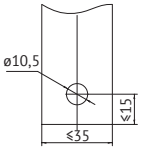

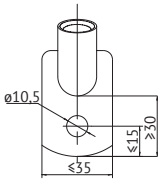

OptiMat E250 with pole extenders

Minimum allowable distance from OptiMat E100 and E250 switches to metal parts of switchgear

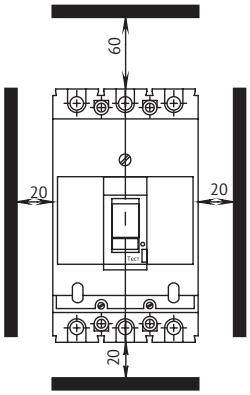

OptiMat D Molded case circuit breakers for currents from 40 to 1600 A

OptiMat D range of molded case circuit breakers and disconnector switches is modern generation of three-pole circuit breakers of fixed, plug-in and withdrawable design equipped with thermomagnetic regulated and electronic microprocessor trip units aimed at protecting electric circuits from overload and short circuits, including one-phase short circuits.
Circuit breakers approved by the Russian Maritime Register of Shipping (hereinafter RMRS) and the Russian Classification Society (hereinafter RCS) are designed to protect electrical equipment on ships and port infrastructure. Circuit breakers approved by the NPP are designed to protect nuclear power stations.

Designation

For circuit breakers with microprocessor trip unit

OptiMat D 1600 N - D - MR2 - U3 - AES

(1) (2) (3) (4) (5) (6) (7) (8)

1	Series	OptiMat								
2	Configuration	D — molded case circuit breakers								
3	Frame size / Rated current In, A	100	160	250	400	630	800	1000	1250	1600
4	Limiting breaking capacity, kA	N — 40 H — 65	N — 40 H — 65	N — 40 H — 65	N — 40 H — 65	N — 40 H — 65	N — 50 H — 85	N — 50 H — 85	N — 50 H — 85	N — 50 H — 85
5	Circuit breaker design version	Only for withdrawable OptiMat D800, 1000, 1250, 1600 A additional designation: D - withdrawable [5]								
6	Type of microprocessor trip unit	[1] MR1			[1] MR1 [2] MR1.1 [3] MR2.1 [4] MR2		[4] MR2			
7	Designation of climatic and placement category	U3 (international T) — approved by QCD OM4 (international UM4) — for circuit breakers with RMRS								
8	Approval designation	REC— for circuit breakers with RMRS and RCS			AES — for nuclear power plants			when absent — QCD approval		

[1] MR1 — protection of electric circuits from overload and short circuits with regulated time delay in the overload zone and regulated short-term time delay in short circuit zone, with programmable thermal memory.

[2] MR1.1 — protection of electrical circuits from overload and short circuits with fixed time delay in the overload zone and adjustable short-term time delay in short circuit zone, with preset thermal memory function.

[3] MR2.1 — protection of electric circuits from overload and short circuits (including one-phase short circuits) with regulated time delay in the overload zone and regulated short-term time delay in short circuit zone, with programmable thermal memory.

[4] MR2 — protection of electric circuits from overload and short circuits (including one-phase short circuits) with regulated time delay in the overload zone and regulated short-term time delay in short circuit zone, with programmable thermal memory and programmable parameters indication.

[5] Withdrawable design version OptiMat D800-1600 is supplied complete with a fixed part.

Basic configuration of OptiMat D circuit breaker includes inter-pole partitions (4 pcs).

Codes indicated in the tables can be amended. If you did not find the necessary codes on the website, please call KEAZ customer service.

For circuit breakers with thermomagnetic regulated releases

OptiMat D 250 N - TM 250 - UHL3 - AES

(1) (2) (3) (4) (5) (6) (7) (8)

1	Series	OptiMat		
2	Configuration	D — molded case circuit breakers		
3	Circuit breaker size designation	250 — with 16 to 250 A releases	630 — with 320 to 630 A releases	
4	Limiting breaking capacity, kA	L — 25 N — 40 F — 50	N — 40 F — 50 H — 65	
5	Release designation	TM — thermomagnetic adjustable release for protecting electrical circuits from overloads and short circuits		
6	Release rated currents	016, 020, 025, 032, 040, 050, 063, 080, 100, 125 — with operating current I_R regulated setpoints from overload currents and fixed protection setpoints for short circuit currents 160, 200, 250 — with regulated setpoints from overload currents and SC currents	320, 400, 500, 630 — with regulated setpoints from overload currents and SC currents	
7	Designation of climatic and placement category	UHL3		
8	Approval designation	REG — for circuit breakers with RMRS and RCS	AES — for nuclear power plants	when absent — QCD approval

Basic configuration of OptiMat D circuit breaker includes inter-pole partitions (4 pcs).

For class X (ABP-X) circuit breaker-disconnector

OptiMat D 250 - NA - UHL3 - AES

(1) (2) (3) (4) (5) (6)

1	Series	OptiMat				
2	Configuration	D — molded case circuit breakers				
3	Frame size / Rated current In, A	100	160	250	400	630
4	ABS class designation	NA — Class X: with built in unregulated instantaneous short circuit release for self protection				
5	Designation of climatic and placement category	UHL3				
6	Approval designation	REG — for circuit breakers with RMRS and RCS	AES — for nuclear power plants	when absent — QCD approval		

Basic configuration of OptiMat D circuit breaker includes inter-pole partitions (4 pcs).

Series advantages

Intellectual microprocessor trip units provide all required types of protection with high measurement accuracy of network parameters.

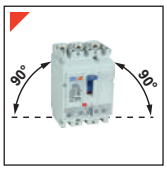

Mounting vertically or turning right/left by 90° for fixed, plug-in and withdrawable versions.

OptiMat E circuit breakers can be operated at -40...+70 °C (for microprocessor trip unit) and -60...+70 °C (for thermomagnetic releases)

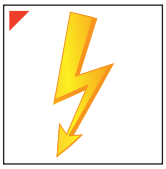

Efficient current limitation significantly reduces the impact of short circuit current both on grid elements and the device itself.

Resistant to switching overvoltages and radiofrequency interference.

5 years warranty. Each unit undergoes multistage quality control from assembling to the finished goods warehouse.

Main contact «double break» system guarantees instantaneous short circuit current breaking and significantly decreases main contact wear, which results in longer service life of the circuit breaker.

The location in the central part of Russia and fully domestic production facilities allow us to fulfill equipment delivery in the shortest possible time.

Technical specification

Type of release		Thermomagnetic adjustable						Microprocessor									
Sizes of circuit breakers		OptiMat D250			OptiMat D630			OptiMat D100		OptiMat D160		OptiMat D250		OptiMat D400		OptiMat D630	
Main characteristics																	
Rated operating voltage Ue, V		690						690									
Rated insulation voltage Ui, V		800						800									
Rated impulse withstand voltage Uimp, kV		8						8									
Application category		A						A						A (MR1), B (MR1.1), (MR2) и (MR2.1)			
Suitability for disconnection		yes						yes									
Number of poles		3						3									
Control																	
Manual	control lever	+						+						+			
	rotary remote handle	+						+						+			
Electrical	motor drive	+						+						+			
Versions and connection types																	
Fixed	front mounting	+						+						+			
	rear mounting	+						+						+			
Plug-in	front, rear mounting, orientable	+						+						+			
Withdrawable	front, rear mounting, orientable	+						+						+			
Rated and limiting parameters of the main circuit of circuit breakers																	
Rated current In, A		16, 20, 25, 32, 40, 50, 63, 80, 100, 125, 160, 200, 250			320, 400, 500, 630			100		160		250		400		630	
Rated frequency, Hz		50						50									
Levels of breaking capacity		L	N	F	N	F	H	N	H	N	H	N	H	N	H	N	H
Rated limiting short-circuit breaking capacity (Icu), kA	Ue 400 V	25	40	50	40	50	65	40	65	40	65	40	65	40	65	40	65
	Ue 690 V	8	8	10	8	10	10	8	10	8	10	8	10	8	10	8	10
Rated operating maximum capacity Ics, % from Icu		100						100									
Rated short circuit making capacity Icm, kA	Ue 400 V	53	84	105	84	105	143	84	143	84	143	84	143	84	143	84	143
	Ue 690 V	13,6	13,6	17	13,6	17	17	13,6	17	13,6	17	13,6	17	13,6	17	13,6	17
Rated short-time withstand current Icw, kA	0,5 sec	-			-			3						7,5		7,5	
	1 sec	-						-						-			
General wear resistance, cycles		16000			10000			16000		16000				10000			
Switching wear resistance, cycles	Ue 400 V	6300			2500			10000		6300				2500			
Protection releases																	
Thermomagnetic release/microprocessor trip unit		TM						MR1						MR1	MR1.1	MR2	MR2.1
Overload protection	with regulated current setpoint	+						+						+	+	+	+
	with fixed time setpoint	-						-						-	+	-	-
	with regulated time setpoint	-						+						-	-	+	+
Short-circuit protection	with regulated setpoint	+ (In=160, 200, 250 A)						+						+	+	+	+
	with time delay	-						+						-	+	+	+
	fixed, instant action	+ (In=16, 20, 25, 32, 40, 50, 63, 80, 100, 125 A)						+						+	+	+	+
Single-phase short circuit protection		-						-						-	-	+	+
Indication of measured current		-						-						+	-	+	-
Supplementary devices for control, signaling and safety																	
Auxiliary contacts	auxiliary contacts (AC)	+						+									
	signal contacts SK1 and SK2	+						+									
Voltage releases and motor drive	shunt trip	+						+									
	undervoltage release	+						+									
	motor drive	+						+									
Accessories for connection and safety	terminal cover	+						+									
	pole extenders	+						+									
	inter-pole partitions	included						included									
Overall dimensions and weight																	
Overall dimensions W×H×D, mm		105 x 162,5 x 88			140 x 256 x 111			105 x 162,5 x 88						140 x 256 x 111			
Weight, kg		1,7			5,5			2,2						6,2			

Type of release			Microprocessor								Circuit breaker	
Sizes of circuit breakers			OptiMat D800		OptiMat D1000		OptiMat D1250		OptiMat D1600		OptiMat D250-NA	OptiMat D630-NA
Main characteristics												
Rated operating voltage Ue, V			690								690	
Rated insulation voltage Ui, V			800								800	
Rated impulse withstand voltage Uimp, kV			8								8	
Application category			B								A	
Suitability for disconnection			yes								yes	
Number of poles			3								3	
Control												
Manual	control lever		+								+	
	rotary remote handle		-								+	
Electrical	motor drive		+								+	
Versions and connection types												
Fixed	front mounting		+								+	
	rear mounting		+								+	
Plug-in	front, rear mounting, orientable		-								+	
Withdrawable	front, rear mounting, orientable		+								+	
Rated and limiting parameters of the main circuit of circuit breakers												
Rated current In, A			800		1000		1250		1600		100, 160, 250	400, 630
Rated frequency, Hz			50								50	
Levels of breaking capacity			N	H	N	H	N	H	N	H	F	H
Rated limiting breaking capacity Icu, kA		Ue 400 V	50	85	50	85	50	85	50	85	50	65
		Ue 690 V	20	30	20	30	20	30	20	30	10	10
Rated operating capacity Ics, % from Icu			100								-	
Rated short circuit making capacity Icm, kA		Ue 400 V	105	187	105	187	105	187	105	187	105	143
		Ue 690 V	40	63	40	63	40	63	40	63	17	17
Rated short-time withstand current Icw, kA		0,5 sec.	-								4	11,3
		1 sec.	19,2								-	-
General wear resistance, cycles			10000								16000	10000
Switching wear resistance, cycles		Ue 400 V	2000		2000		1000		1000		6300	2500
Protection releases												
Thermomagnetic release/microprocessor trip unit			MR2								-	
Overload protection	with regulated current setpoint		+								-	
	with fixed time setpoint		-								-	
	with regulated time setpoint		+								-	
Short-circuit protection	with regulated setpoint		+								-	
	with time delay		+								-	
	fixed, instant action		+								-	
Single-phase short circuit protection			+								-	
Indication of measured current			+								-	
Supplementary devices for control, signaling and safety												
Auxiliary contacts	auxiliary contacts (AC)		+								+	
	signal contacts SK1 and SK2		+								+	
Voltage releases and motor drive	shunt trip		+								+	
	undervoltage release		developed								+	
	motor drive		+								+	
Accessories for connection and safety	terminal cover		+								+	
	pole extenders		+								+	
	inter-pole partitions		included								included	
Overall dimensions and weight												
Overall dimensions W×H×D, mm			210 x 378 x 140								105 x 162,5 x 88	140 x 256 x 111
Weight, kg			17								1,7	5,5

Items

Appearance	Rated current, A	Product name	Code	Product name	Code	Product name	Code
Design with thermomagnetic regulated release							
Rated limiting breaking capacity		Icu=25 kA at 400 V AC		Icu = 40 kA at 400 V AC		Icu = 50 kA at 400 V AC	
	16	OptiMat D250L-TM016-UHL3	291409	OptiMat D250N-TM016-UHL3	291422	OptiMat D250F-TM016-UHL3	291435
	20	OptiMat D250L-TM020-UHL3	291410	OptiMat D250N-TM020-UHL3	291423	OptiMat D250F-TM020-UHL3	291436
	25	OptiMat D250L-TM025-UHL3	291411	OptiMat D250N-TM025-UHL3	291424	OptiMat D250F-TM025-UHL3	291437
	32	OptiMat D250L-TM032-UHL3	291412	OptiMat D250N-TM032-UHL3	291425	OptiMat D250F-TM032-UHL3	291438
	40	OptiMat D250L-TM040-UHL3	291413	OptiMat D250N-TM040-UHL3	291426	OptiMat D250F-TM040-UHL3	291439
	50	OptiMat D250L-TM050-UHL3	291414	OptiMat D250N-TM050-UHL3	291427	OptiMat D250F-TM050-UHL3	291440
	63	OptiMat D250L-TM063-UHL3	291415	OptiMat D250N-TM063-UHL3	291428	OptiMat D250F-TM063-UHL3	291441
	80	OptiMat D250L-TM080-UHL3	291416	OptiMat D250N-TM080-UHL3	291429	OptiMat D250F-TM080-UHL3	291442
	100	OptiMat D250L-TM100-UHL3	291417	OptiMat D250N-TM100-UHL3	291430	OptiMat D250F-TM100-UHL3	291443
	125	OptiMat D250L-TM125-UHL3	291418	OptiMat D250N-TM125-UHL3	291431	OptiMat D250F-TM125-UHL3	291444
	160	OptiMat D250L-TM160-UHL3	291419	OptiMat D250N-TM160-UHL3	291432	OptiMat D250F-TM160-UHL3	291445
	200	OptiMat D250L-TM200-UHL3	291420	OptiMat D250N-TM200-UHL3	291433	OptiMat D250F-TM200-UHL3	291446
	250	OptiMat D250L-TM250-UHL3	291421	OptiMat D250N-TM250-UHL3	291434	OptiMat D250F-TM250-UHL3	291447
Rated limiting breaking capacity		Icu = 40 kA at 400 V AC		Icu = 50 kA at 400 V AC		Icu = 65 kA at 400 V AC	
	320	OptiMat D630N-TM320-UHL3	291465	OptiMat D630F-TM320-UHL3	291469	OptiMat D630H-TM320-UHL3	291473
	400	OptiMat D630N-TM400-UHL3	291466	OptiMat D630F-TM400-UHL3	291470	OptiMat D630H-TM400-UHL3	291474
	500	OptiMat D630N-TM500-UHL3	291467	OptiMat D630F-TM500-UHL3	291471	OptiMat D630H-TM500-UHL3	291475
	630	OptiMat D630N-TM630-UHL3	291468	OptiMat D630F-TM630-UHL3	291472	OptiMat D630H-TM630-UHL3	291476

Appearance	Rated current, A	Product name	Code	Product name	Code
Design with microprocessor trip unit MR1					
Rated limiting breaking capacity		Icu=40 kA at 400 V AC		Icu=65 kA at 400 V AC	
	100	OptiMat D100N-MR1-U3	144412	OptiMat D100H-MR1-U3	144414
	160	OptiMat D160N-MR1-U3	285502	OptiMat D160H-MR1-U3	285503
	250	OptiMat D250N-MR1-U3	137335	OptiMat D250H-MR1-U3	144411
	400	OptiMat D400N-MR1-U3	279892	OptiMat D400H-MR1-U3	279891
	630	OptiMat D630N-MR1-U3	279890	OptiMat D630H-MR1-U3	279889

Appearance	Rated current, A	Product name	Code	Product name	Code
Design with microprocessor trip unit MR1.1					
Rated limiting breaking capacity		Icu = 40 kA at 400 V AC		Icu = 65 kA at 400 V AC	
	400	OptiMat D400N-MR1.1-U3	321646	OptiMat D400H-MR1.1-U3	321648
	630	OptiMat D630N-MR1.1-U3	321650	OptiMat D630H-MR1.1-U3	321654

Appearance	Rated current, A	Product name	Code	Product name	Code
Design with microprocessor trip unit MR2					
Rated limiting breaking capacity		**Icu=40 kA at 400 V AC**		**Icu=65 kA at 400 V AC**	
	400	OptiMat D400N-MR2-U3	249225	OptiMat D400H-MR2-U3	249226
	630	OptiMat D630N-MR2-U3	144413	OptiMat D630H-MR2-U3	144415
Rated limiting breaking capacity		**Icu=50 kA at 400 V AC**		**Icu=85 kA at 400 V AC**	
	800	OptiMat D800N-MR2-U3	307837	OptiMat D800H-MR2-U3	307836
	1000	OptiMat D1000N-MR2-U3	270314	OptiMat D1000H-MR2-U3	270315
	1250	OptiMat D1250N-MR2-U3	307838	OptiMat D1250H-MR2-U3	307839
	1600	OptiMat D1600N-MR2-U3	233946	OptiMat D1600H-MR2-U3	233947
Rated limiting breaking capacity		**Icu=50 kA at 400 V AC**		**Icu=85 kA at 400 V AC**	
	800	OptiMat D800N-D-MR2-U3	321641	OptiMat D800H-D-MR2-U3	321642
	1000	OptiMat D1000N-D-MR2-U3	294415	OptiMat D1000H-D-MR2-U3	294416
	1250	OptiMat D1250N-D-MR2-U3	321643	OptiMat D1250H-D-MR2-U3	321643
	1600	OptiMat D1600N-D-MR2-U3	293576	OptiMat D1600H-D-MR2-U3	294414

Appearance	Rated current, A	Product name	Code	Product name	Code
Design with microprocessor trip unit MR2.1					
Rated limiting breaking capacity		**Icu=40 kA at 400 V AC**		**Icu=65 kA at 400 V AC**	
	400	OptiMat D400N-MR2.1-U3	321658	OptiMat D400H-MR2.1-U3	321659
	630	OptiMat D630N-MR2.1-U3	321663	OptiMat D630H-MR2.1-U3	321664

Appearance	Rated current, A	Product name	Code
Design types of circuit breakers-diconnector, class X (ABP-X)			
Rated limiting breaking capacity		**Icu = 50 kA at 400 V AC**	
	100	OptiMat D100-NA-UHL3	303832
	160	OptiMat D160-NA-UHL3	303831
	250	OptiMat D250-NA-UHL3	303833

Appearance	Rated current, A	Product name	Code
Design types of circuit breakers-diconnector, class X (ABP-X)			
Rated limiting breaking capacity		**Icu = 65 kA at 400 V AC**	
	400	OptiMat D400-NA-UHL3	303834
	630	OptiMat D630-NA-UHL3	303835

Appearance	Rated current, A	Product name	Code	Product name	Code
Design with microprocessor trip unit MR1 REC					
Rated limiting breaking capacity		**Icu=40 kA at 400 V AC**		**Icu=65 kA at 400 V AC**	
	100	OptiMat D100N-MR1-U3-REC	244073	OptiMat D100H-MR1-U3-REC	244072
		OptiMat D100N-MR1-OM4-REC	255731	OptiMat D100H-MR1-OM4-REC	255734
	160	OptiMat D160N-MR1-U3-REC	on request	OptiMat D160H-MR1-U3-REC	on request
		OptiMat D160N-MR1-OM4-REC	327482	OptiMat D160H-MR1-OM4-REC	327481
	250	OptiMat D250N-MR1-U3-REC	244075	OptiMat D250H-MR1-U3-REC	244074
		OptiMat D250N-MR1-OM4-REC	255733	OptiMat D250H-MR1-OM4-REC	255732

Appearance	Rated current, A	Product name	Code	Product name	Code
Design with microprocessor trip unit MR1 REC					
Rated limiting breaking capacity		Icu=40 kA at 400 V AC		Icu=65 kA at 400 V AC	
	400	OptiMat D400N-MR1-U3-REC	on request	OptiMat D400H-MR1-U3-REC	on request
		OptiMat D400N-MR1-OM4-REC	327474	OptiMat D400H-MR1-OM4-REC	327471
	630	OptiMat D630N-MR1-U3-REC	285388	OptiMat D630H-MR1-U3-REC	285389
		OptiMat D630N-MR1-OM4-REC	285390	OptiMat D630H-MR1-OM4-REC	285391

Appearance	Rated current, A	Product name	Code	Product name	Code
Design with microprocessor trip unit MR1.1 REC					
Rated limiting breaking capacity		Icu = 40 kA at 400 V AC		Icu = 65 kA at 400 V AC	
	400	OptiMat D400N-MR1.1-U3-REC	353181	OptiMat D400H-MR1.1-U3-REC	353184
		OptiMat D400N-MR1.1-OM4-REC	327473	OptiMat D400H-MR1.1-OM4-REC	327476
	630	OptiMat D630N-MR1.1-U3-REC	353186	OptiMat D630H-MR1.1-U3-REC	353188
		OptiMat D630N-MR1.1-OM4-REC	327479	OptiMat D600H-MR1.1-OM4-REC	327477
Design with microprocessor trip unit MR2 REC					
Rated limiting breaking capacity		Icu=40 kA at 400 V AC		Icu=65 kA at 400 V AC	
	400	OptiMat D400N-MR2-U3-REC	255723	OptiMat D400H-MR2-U3-REC	255724
		OptiMat D400N-MR2-OM4-REC	255725	OptiMat D400H-MR2-OM4-REC	255726
	630	OptiMat D630N-MR2-U3-REC	244090	OptiMat D630H-MR2-U3-REC	244089
		OptiMat D630N-MR2-OM4-REC	255727	OptiMat D630H-MR2-OM4-REC	255730
Rated limiting breaking capacity		Icu=50 kA at 400 V AC		Icu=85 kA at 400 V AC	
	800	OptiMat D800N-MR2-U3-REC	353195	OptiMat D800H-MR2-U3-REC	353194
		OptiMat D800N-MR2-OM4-REC	on request	OptiMat D800H-MR2-OM4-REC	on request
	1000	OptiMat D1000N-MR2-U3-REC	353191	OptiMat D1000H-MR2-U3-REC	353190
		OptiMat D1000N-MR2-OM4-REC	on request	OptiMat D1000H-MR2-OM4-REC	on request
	1250	OptiMat D1250N-MR2-U3-REC	353193	OptiMat D1250H-MR2-U3-REC	353192
		OptiMat D1250N-MR2-OM4-REC	on request	OptiMat D1250H-MR2-OM4-REC	on request
	1600	OptiMat D1600N-MR2-U3-REC	244093	OptiMat D1600H-MR2-U3-REC	244092
		OptiMat D1600N-MR2-OM4-REC	on request	OptiMat D1600H-MR2-OM4-REC	on request
Design with microprocessor trip unit MR2.1 REC					
Rated limiting breaking capacity		Icu=40 kA at 400 V AC		Icu=65 kA at 400 V AC	
	400	OptiMat D400N-MR2.1-U3-REC	353182	OptiMat D400H-MR2.1-U3-REC	353185
		OptiMat D400N-MR2.1-OM4-REC	327475	OptiMat D400H-MR2.1-OM4-REC	327472
	630	OptiMat D630N-MR2.1-U3-REC	353187	OptiMat D630H-MR2.1-U3-REC	353189
		OptiMat D630N-MR2.1-OM4-REC	327480	OptiMat D630H-MR2.1-OM4-REC	327478

Circuit breaker

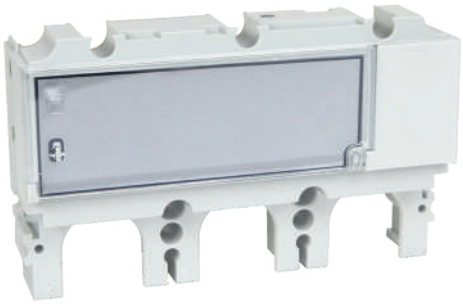

OptiMat D-NA circuit breaker-disconnectors up to 630 A are devices manufactured on the basis of the corresponding circuit breakers, while maintaining the dimensions, designs, fastening and the ability to install accessories.

OptiMat D-NA do not provide protection, but have built-in self-protection.

Circuit breaker	Self-protection current setting (Ii), A
OptiMat D100-NA	3500
OptiMat D160-NA	
OptiMat D250-NA	
OptiMat D400-NA	8800
OptiMat D630-NA	

Thermomagnetic regulated releases

OptiMat D circuit breakers up to 630 A can be equipped with regulated TM releases. Thermomagnetic regulated release can adjust operating current IR to protect from overload current. It also has a setpoint from short circuit current protection, including regulated setpoints for rated current from 160 to 630 A.

Setpoints for current and tripping time in the zones of overload and short circuit are presented in the table below:

Parameter	Value			Permissible tolerance
	16 to 125 A	160 to 250 A	320 to 630 A	
Setpoint of operating current I_R of the release in multiplicity to the circuit breaker rated current (I_R/In)	Regulated 0,7; 0,8; 0,9; 1,0			-
Time delay (c) tr tr at 1,5 x In tr at 2 x In tr at 6 x Ir	Non-regulated 120–600 60–250 5–15			-
Operating current setpoints in the short circuit zone I_i as a multiple of the rated current (I_i/In)	10xIn	5; 6; 7; 8; 9; 10 In	5...10 In	±20 %

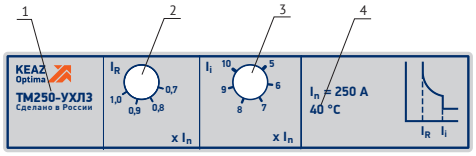

1. Release marking.
2. Setpoint switch of release operating current (I_R) in multiplicity to the circuit breaker rated current (In).
3. Setpoint switch of trip current in short circuit zone (I_i) in multiplicity to the rated current (In).
4. Release control temperature.

Microprocessor trip unit

Optimat D circuit breakers can be equipped with microprocessoring releases MR1, MR1.1, MR2 and MR2.1. A microprocessor trip unit is comprised of the following parts: actuating electromagnet, measuring devices and release control block. Shunt trip adjustments allow precise setpoint maps to be built up to provide coordinated protection. The microprocessor trip unit has the following advantages over a conventional thermomagnetic release: a diverse set of protection functions and a wide range of settings, high operating accuracy, protection coordination and selectivity, as well as no temperature influence, performance indicators and reasons for deviation.

Microprocessor trip unit MR1 (for OptiMat D100, D160 and D250)

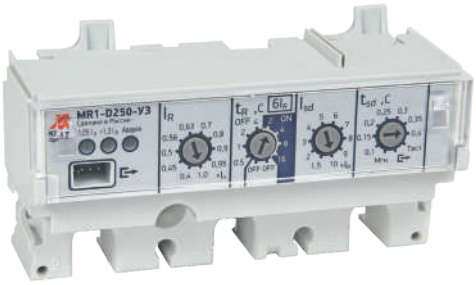

Setpoints of current and tripping time in the overload and short circuit zones are presented in the table below:

Parameter	Value	Permissible tolerance
Setpoint of operating current I_R of the release in multiplicity to the circuit breaker rated current (I_R/I_n)	0,4; 0,45; 0,5; 0,56; 0,63; 0,7; 0,8; 0,9; 0,95; 1,0	±2 %
Tripping time setpoints at current of $6I_R$ (t_R), s	0,5; 1; 2; 4 — without «thermal memory»; 2; 4; 8; 16 — with «thermal memory» OFF — overload protection is off	±10 %
Trip current setpoints in the short circuit zone I_{sd} as a multiple of the operating current (I_{sd}/I_R)	1,5; 2; 3; 4; 5; 6; 7; 8; 9; 10	±15 %
Tripping time setpoints in short circuit zone (t_{sd}), s	Inst. (without intentional time delay); 0,1; 0,15; 0,2; 0,25; 0,3; 0,35; 0,4	±0,02 s
Instantaneous current setpoint I_i to In (non-regulated)	12	±20 %

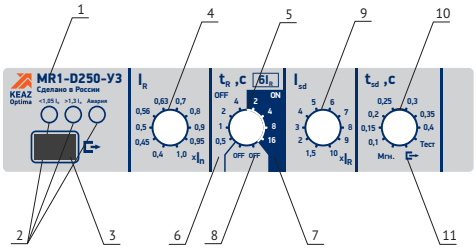

1. Trip unit marking.
2. Color load and emergency indicators.
3. A slot for external release testing device at the manufacturer's facility.
4. Switch of setpoint of operating current (I_R) in multiplicity to the circuit breaker rated current (In).
5. Switch of tripping time setpoints (t_R) at a current $6I_R$.
6. Zone of tripping time setpoints in overload zone without «thermal memory» (off).
7. Zone of tripping time setpoints in overload zone with «thermal memory» (on).
8. Position of circuit breaker disabling overload protection.
9. Switch of trip current setpoint in short circuit zone (I_{sd}) in multiplicity to the operating current (I_R).
10. Switch of tripping time setpoints in short circuit zone (t_{sd}).
11. Position «[->» of circuit breaker.
10. Position «[->» is selected when the release is tested by an external device. It is designed for approval tests of the release at the manufacturer's facility.

Testing

Health test of maximal releases is conducted with the circuit breaker in "on" state (pole contacts closed).

To launch a health test:
- set circuit breaker 10 into «Test» position, at that, circuit breakers 4, 5 and 9 can have any position;
- turn the circuit breaker on;
- energize with operating current I_R = (0,4–1,0) In.

Health test program will send a signal to circuit breaker work indicators (LEDs shall light in a sequence) and the actuating release, which should result in circuit breaker opening.
To exit the health test mode, set circuit breaker 10 in any position except for «Тест» and «[->».

Microprocessor trip unit MR1.1 (for OptiMat D400 and D630)

Setpoints of current and tripping time in the overload and short circuit zones are presented in the table below:

Parameter	Value	Permissible tolerance
Setpoint of operating current I_R of the release in multiplicity to the circuit breaker rated current (I_R/I_n)	0,4; 0,45; 0,5; 0,56; 0,63; 0,7; 0,8; 0,9; 0,95; 1,0	±2 %
Tripping time setpoints at current of 6I_R (t_R), s	12 — with «thermal memory»	±10 %
Trip current setpoints in the short circuit zone I_{sd} as a multiple of the operating current (I_{sd}/I_R)	1,5; 2; 3; 4; 5; 6; 7; 8; 9; 10	±15 %
Tripping time setpoints in short circuit zone (t_{sd}), s	Off (without intentional time delay); 0,1; 0,125; 0,15; 0,2; 0,25; 0,3; 0,35; 0,4	±0,02 s
Instantaneous current setpoint I_i (non-regulated), A	5000 (OptiMat D400); 7000 (OptiMat D630)	±20 %

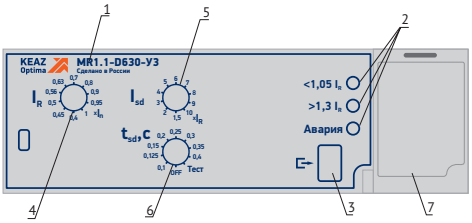

1. Trip unit marking.
2. Color load and emergency indicators.
3. External power supply connector for testing the release.
4. Setpoint switch of release operating current (I_R) in multiplicity to the circuit breaker rated current (In).
5. Switch of trip current setpoints in short circuit zone (I_{sd}) in multiplicity to the operating current (I_R).
6. Switch of tripping time setpoints in short circuit zone (t_{sd}).
7. Compartment for replaceable Li-ion batteries (included with release).

Microprocessor trip unit MR2.1 (for OptiMat D400 and D630)

Setpoints of current and tripping time in the overload and short circuit zones are presented in the table below:

Parameter	Value	Permissible tolerance
Setpoint of operating current I_R of the release in multiplicity to the circuit breaker rated current (I_R/I_n)	0,4; 0,45; 0,5; 0,56; 0,63; 0,7; 0,8; 0,9; 0,95; 1,0	±2 %
Tripping time setpoints at current of 6I_R (t_R), s	Off (overload protection deactivated), 0,5; 1; 2; 4 — without «thermal memory»; Off (overload protection deactivated), 2; 4; 8; 16 — with «thermal memory»	±10 %
Trip current setpoints in the short circuit zone I_{sd} as a multiple of the operating current (I_{sd}/I_R)	1,5; 2; 3; 4; 5; 6; 7; 8; 9; 10	±15 %
Tripping time setpoints in short circuit zone (t_{sd}), s	Off (without intentional time delay); 0,1; 0,125; 0,15; 0,2; 0,25; 0,3; 0,35; 0,4	±0,02 s
Instantaneous trip current setpoint I_i (non-regulated), A	5000 (OptiMat D400); 7000 (OptiMat D630)	±20 %
Trip current setpoints at a single phase short circuit in multiplicity to the rated current (Ig/In)	Off; 0,2; 0,3; 0,4; 0,5; 0,6; 0,7; 0,8; 0,9; 1,0	±10 %
Tripping time setpoints at single phase short circuit, s (tg)	Off (without intentional time delay); 0,2; 0,3; 0,4; 0,5; 0,6; 0,7; 0,8; 0,9; 1,0.	±0,02 s

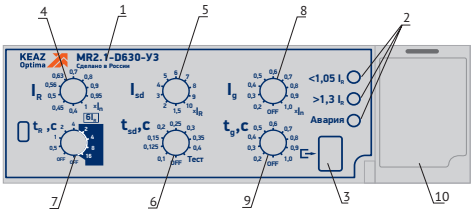

1. Trip unit marking.
2. Color load and emergency indicators.
3. External power supply connector for testing the release.
4. Setpoint switch of release operating current (I_R) in multiplicity to the circuit breaker rated current (In).
5. Switch of trip current setpoints in short circuit zone (I_{sd}) in multiplicity to the operating current (I_R).
6. Switch of tripping time setpoints in short circuit zone (t_{sd}).
7. Setpoint zone:
- Zone of tripping time setpoints in overload zone without «thermal memory» (off)
- Zone of tripping time setpoints in overload zone with «thermal memory» (on)
- Position of switch to disable overload protection.
8. Trip current setpoint switch (I_g) in case of single-phase short circuit in multiplicity to the rated current (In).
9. Tripping time setpoint switch at single phase short circuit (tg).
10. Compartment for replaceable Li-ion batteries (included with release).

Testing for MR1.1 and MR2.1
Health test of maximal releases is conducted with the circuit breaker in «on» state (pole contacts closed).

To launch a health test:
- set switch 6 into «Test» position, at that, switches 4; 5; 7; 8; 9 can have any position;
- connect DC power supply with voltage from 5 to 24 V, with load capacity of at least 1 A, to the miniUSB.
Testing alternately will turn on the LEDs (item 2) and will give a trip signal to the operating release, after which the circuit breaker should open.

To exit the health check mode, switch 6 must be set to any of the positions except the «Test» position.

Microprocessor trip unit MR1 (for OptiMat D400 and D630) and MR2 (for OptiMat D400, D630, D800, D1000, D1250 and D1600)

Setpoints for current and tripping time in the zones of overload and short circuit are presented in the table below:

Parameter	Value		Permissible tolerance
	MR1	MR2	
Setpoint of operating current I_R of the release, A	160 to 400 with 20 A increments (for OptiMat D400) 250 to 630 with 20 A increments (for OptiMat D630)	160–400 with 20 A increments (for In 400 A) 250–630 with 20 A increments (for In 630 A) 320–800 with 40 A increments (for In 800 A) 400–1000 with 50 A increments (for In 1000 A) 500–1250 with 50 A increments (for In 1250 A) 640–1600 with 60 A increments (for In 1600 A)	±2 %
Tripping time setpoints at current of $6I_R$ (t_R), s	12, with «thermal memory»	0,5; 1; 2; 4 — without «thermal memory»; 2; 4; 8; 16 — with «thermal memory»	±10 %
Trip current setpoints in the short circuit zone I_{sd} as a multiple of the operating current (I_{sd}/I_R)	1,5; 2; 3; 4; 5; 6; 7; 8; 9; 10	1,5; 2; 3; 4; 5; 6; 7; 8; 9; 10	±15 %
Tripping time setpoints in short circuit zone (t_{sd}), s	off (without intentional time delay)	off (without intentional time delay); 0,1; 0,15; 0,2; 0,25; 0,3; 0,35; 0,4	±0,02 s
Instantaneous current setpoint I_i (non-regulated), A	5000 for OptiMat D400 7000 for OptiMat D630	5000 for OptiMat D400 7000 for OptiMat D630 9600 for OptiMat D800 12000 for OptiMat D1000 15000 for OptiMat D1250 19200 for OptiMat D1600	±20 %
Trip current setpoints at a single phase short circuit in multiplicity to the rated current (I_g/I_n)	-	Off; 0,4; 0,6; 0,8; 1,0	±10 %
Tripping time setpoints at single phase short circuit (t_g), s	-	0 (без преднамеренной выдержки); 0,1; 0,2; 0,3; 0,4; 0,5; 0,6; 0,7; 0,8; 0,9; 1,0	±0,02 s

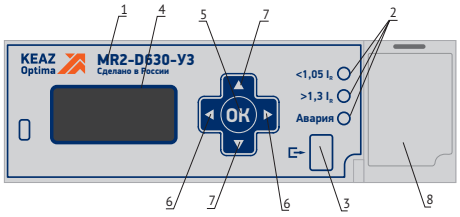

1. Designation of microprocessor trip unit.
2. Color load and emergency LED indicators.
3. MiniUSB slot is designed to connect an external DC source in the TEST mode and connecting an external release testing device at the manufacturer's facility.
4. Screen for programmable parameters.
5. OK button switches between modes, makes processor exit from sleep mode and saves the changes when exiting the menu.
6. Left/right buttons for choosing the previous/next parameter of function (I_R, t_R, I_{sd}, t_{sd}, I_g, t_g, Tm, TEST).
7. Up/down buttons for increasing/decreasing the value of the set parameter and viewing the tripping and errors log;
8. Compartment for replaceable Li-ion batteries (included with release).

Testing

Trip units are health-tested only with the circuit breaker de-energized. Handle shall be up, which is a circuit breaker active position (pole contacts closed). Current must not flow through the poles of the circuit breaker during testing! A DC source with a voltage of 5 to 24 V with a load capacity of 1 A must be connected to the miniUSB connector

To start testing, go to the setpoint menu on the «TEST» tab, use the «▼», «▲», keys, select the «On» value and exit the menu by pressing and holding the «OK» вkey for 3 s. The test will start. After checking the current transducers, health test program will send a signal to the actuating release. «OK»key needs to be pressed if the circuit breaker is off. If the circuit breaker is off, press «OK». The program will automatically exit the «TEST» mode. If a red LED is on, the circuit breaker is faulty. The type of fault can be viewed in the tripping and errors log.

Menu of microprocessor trip units MR1 (for OptiMat D400 and D630) and MR2 (for OptiMat D400, D630, D800, D1000, D1250 and D1600)

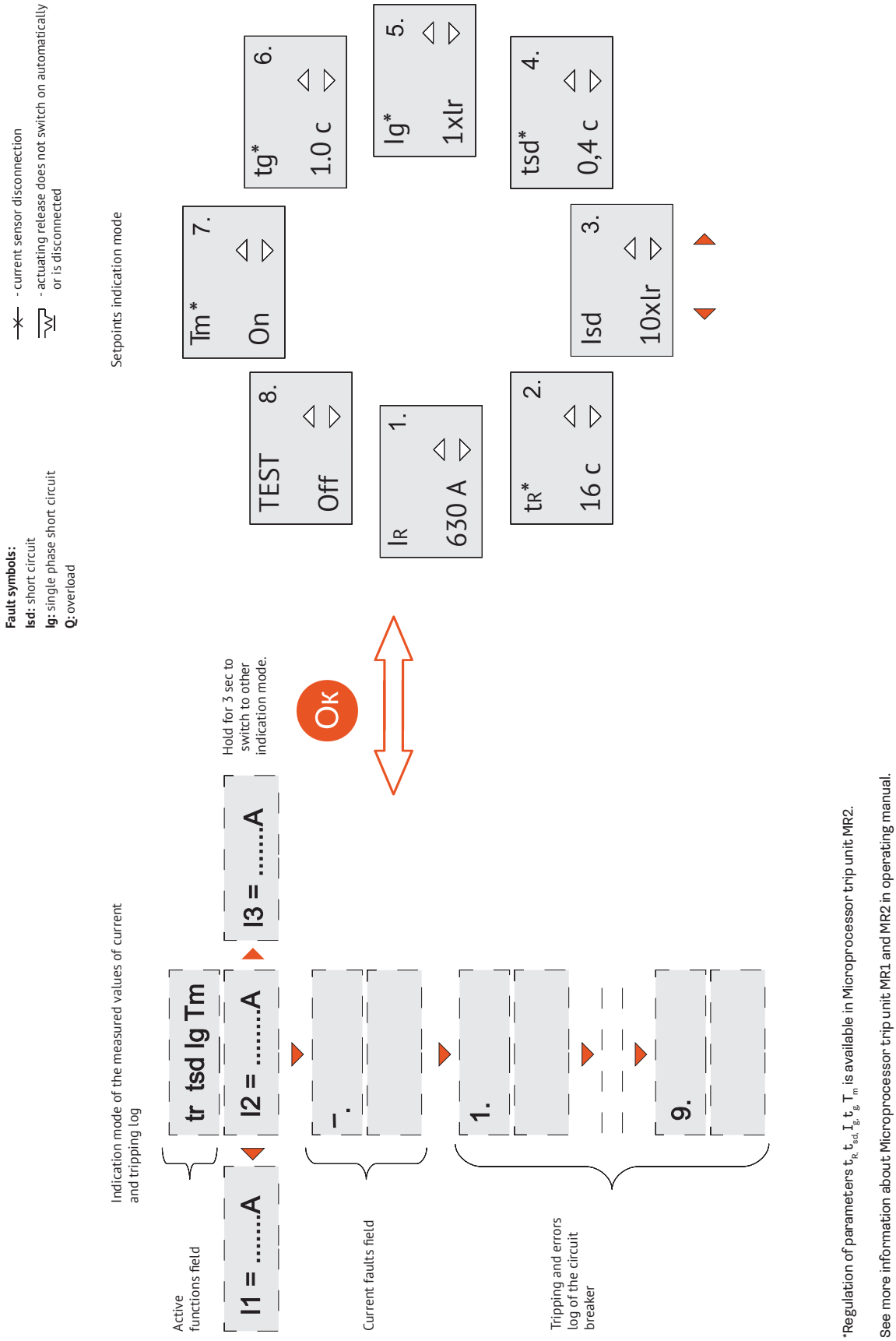

*Regulation of parameters t_R, t_{sd}, I_g, t_g, T_m is available in Microprocessor trip unit MR2.

See more information about Microprocessor trip unit MR1 and MR2 in operating manual.

Current and time characteristics

OptiMat D250 D250 with thermomagnetic regulated release TM016, TM020, TM025, TM032, TM040, TM050

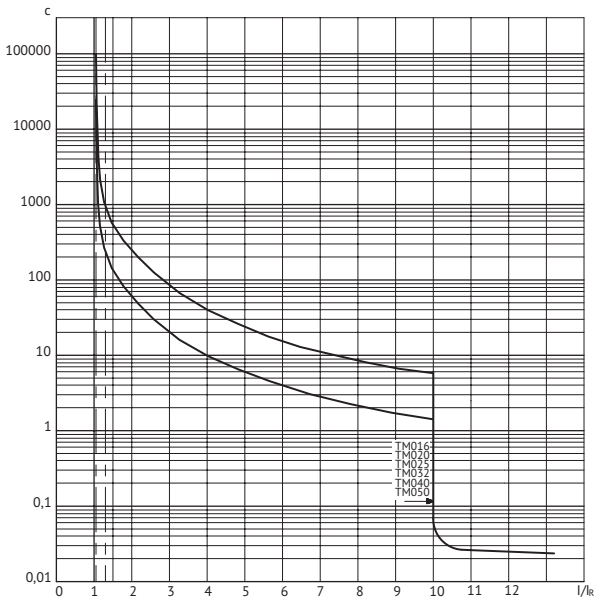

OptiMat D250 D250 with thermomagnetic regulated release TM063, TM080, TM100, TM125

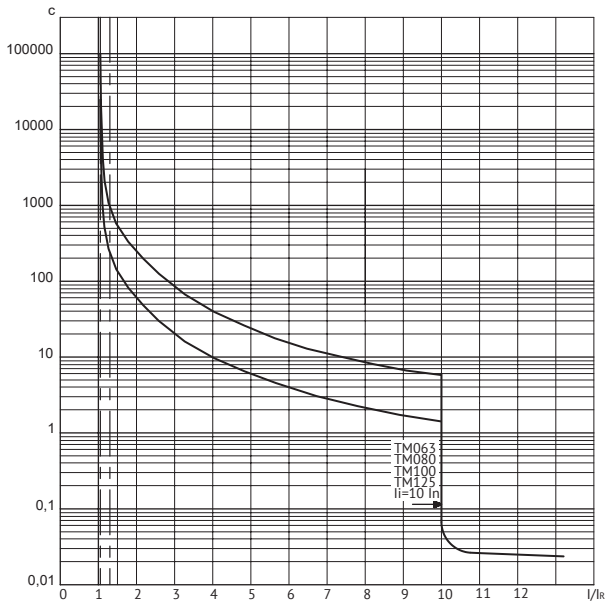

OptiMat D250 D250 with thermomagnetic regulated release TM160, TM200; TM250

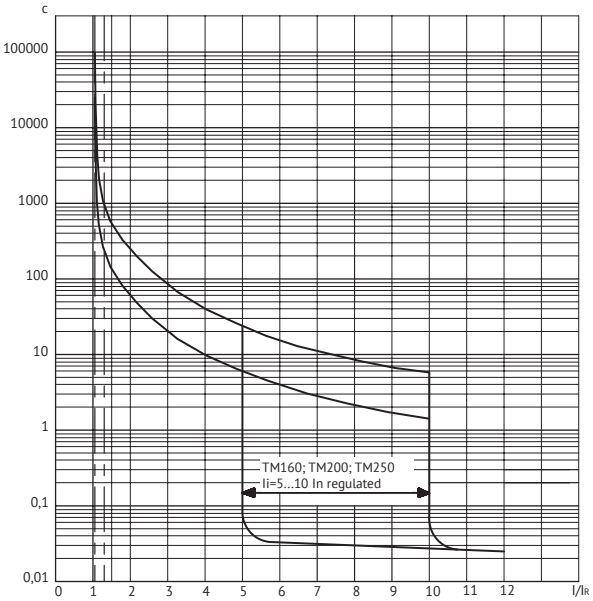

OptiMat D630 D250 with thermomagnetic regulated release TM320, TM400, TM500, TM630

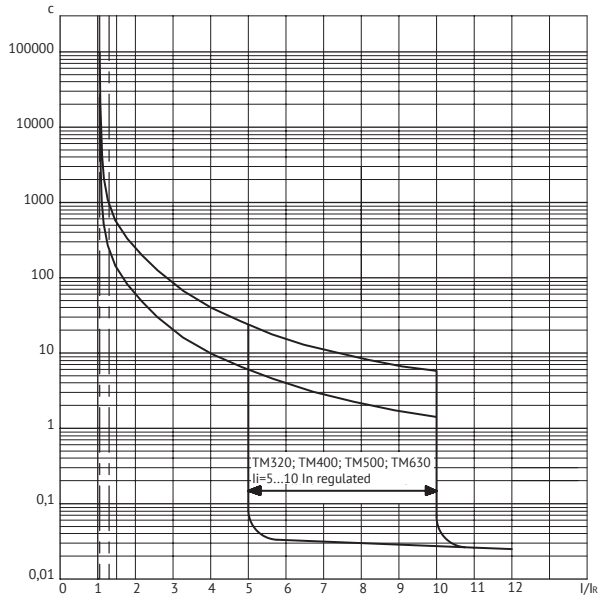

Rated operating currents of OptiMat D250 and D630 circuit breakers with thermomagnetic protection releases vs. ambient temperature

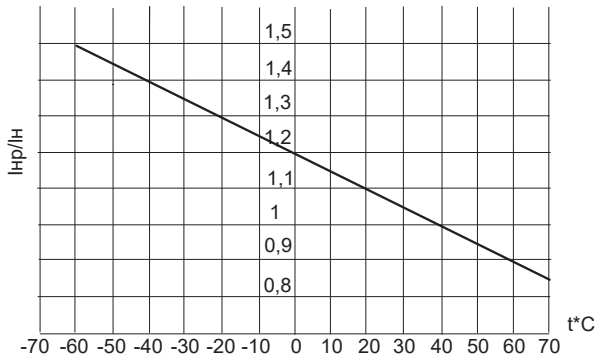

Time-current characteristics in the overload zone and in short-circuit zone

OptiMat D100, D160 and D250 with microprocessor trip unit MR1

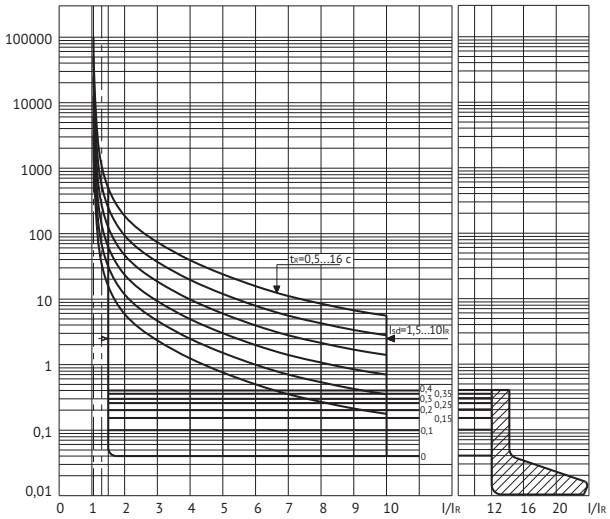

OptiMat D400 and D630 with microprocessor trip unit MR1 and MR1.1

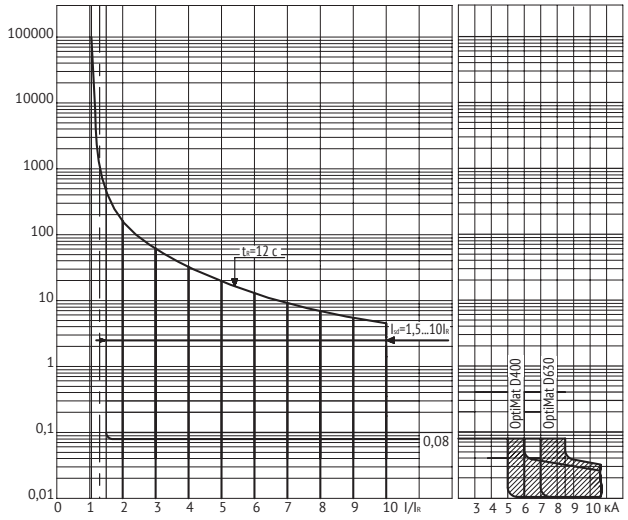

OptiMat D400 and D630 with microprocessor trip unit MR2 and MR2.1

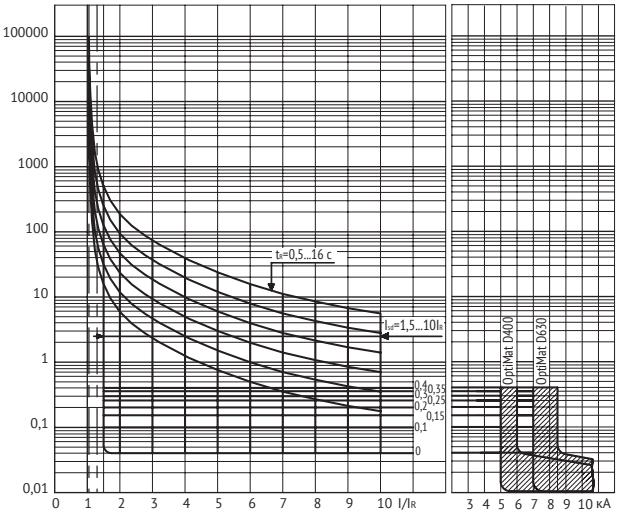

OptiMat D800, D1000, D1250 and D1600 with microprocessor trip unit MR2

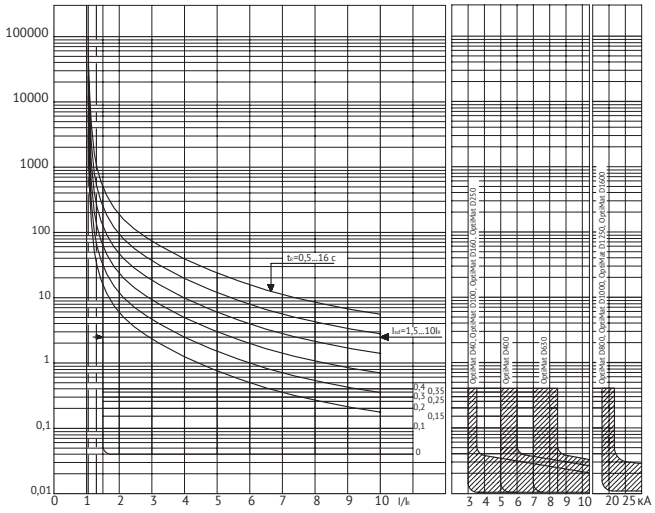

Overload protection response time t_R vs. current:

Time at $6I_R$, c	0,5	1	2	4	2	4	8	12*	16
Load	without thermal memory, s				with thermal memory, s				
$1,3I_R$	16,7...20,4	33,3...40,7	66,6...81,4	133,1...162,7	70,7...86,4	151...184	354...433	666...814	1375...1680
$1,5I_R$	11,3...13,8	22,5...27,5	45...55	90...110	46,8...57,2	97,7...119,4	215...262	361...441	556...679
$2I_R$	5,4...6,6	10,8...13,2	21,6...26,4	43...52,7	22...26,8	45...55	93..114	146...179	204...249
$3I_R$	2,1...2,5	4,1...5,1	8,3...10,1	16,5...20,2	8,3...10,1	16,6...20,5	34...41,6	51...63	70,1...85,7
$4I_R$	1,1...1,3	2,2...2,6	4,3...5,3	8,6...10,6	4,3...5,3	8,7...10,7	17,6...21,5	26,5...32,5	35,7...43,7
$6I_R$	0,45...0,55	0,9...1,1	1,8...2,2	3,6...4,4	1,8...2,2	3,6...4,4	7,2...8,8	10,8...13,3	14,4...17,6
$8I_R$	0,27...0,33	0,45...0,55	0,9...1,1	2...2,4	1...1,2	2...2,4	4...4,8	5,9...7,2	7,9...9,7
$10I_R$	0,18...0,22	0,27...0,33	0,6...0,8	1,2...1,5	0,6...0,8	1,3...1,5	2,4...3	3,7...4,5	5...6

* Only for MR1/ MR1.1 — D400/630

Note — For the t_R time setpoints in the thermal memory zone, the response time values are shown for the first check of the release. When subsequent release checks are conducted for 20 minutes, there can be allowable deviations from the indicated tripping times due to program adjustment of thermal memory.

Configuration

Configuration of OptiMat D100, D160 and D250

1 Circuit breaker
2 Shunt trip
3 Auxiliary contacts (auxiliary and signal contacts)
4 Undervoltage release
5 Terminals for rear connection
6 Inter-pole partitions
7 Terminal cover
8 Plug-in connection set
9 Withdrawable design set
10 Motor drive
11 Remote manual drive
12 External secondary circuit connectors
13 Pole expanders
14 Position locking device (off)

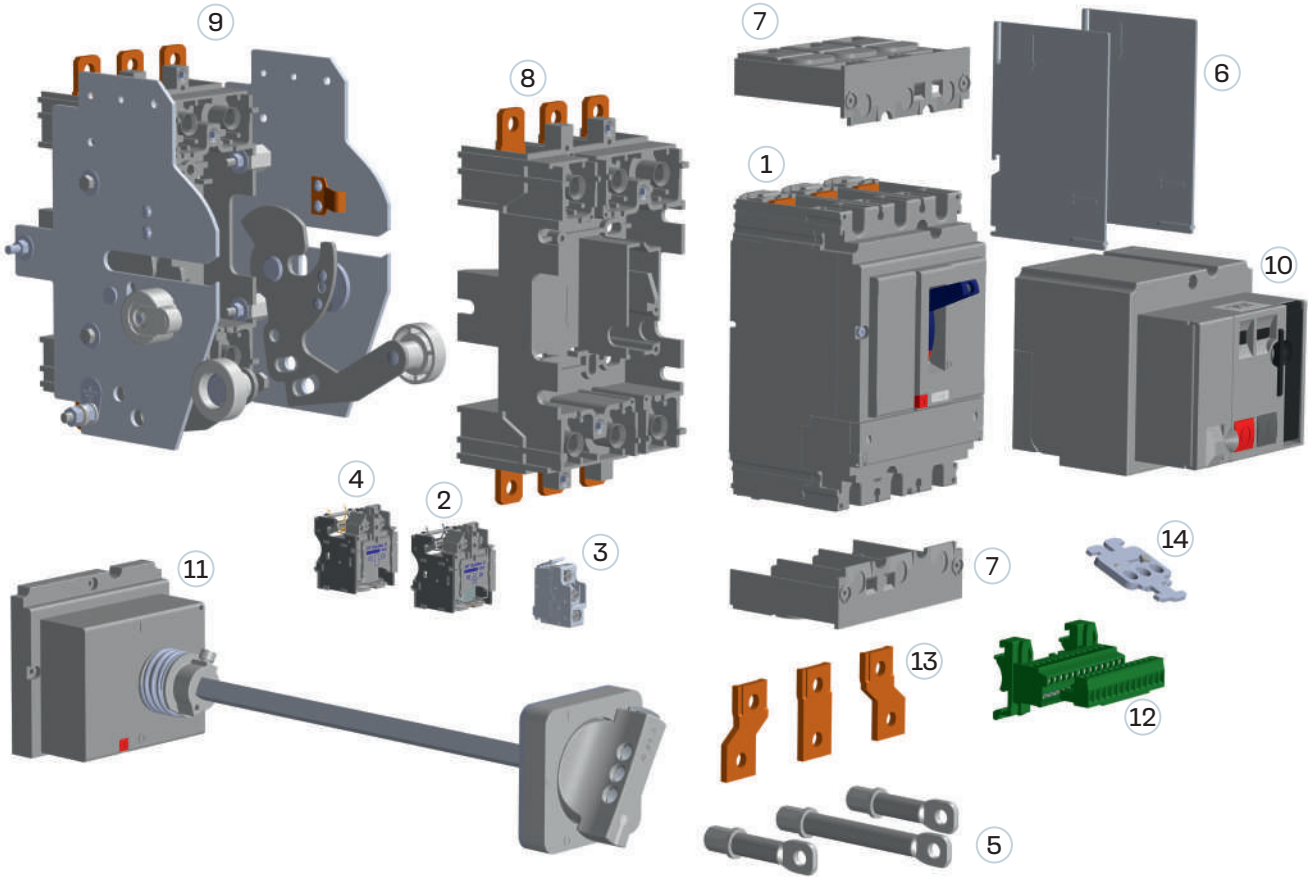

Configuration of OptiMat D400 и D630

1 Circuit breaker
2 Shunt trip
3 Auxiliary contacts (auxiliary and signal contacts)
4 Undervoltage release
5 Terminals for rear connection
6 Inter-pole partitions
7 Terminal cover
8 Plug-in connection set
9 Withdrawable design set
10 Motor drive
11 Remote manual drive
12 External secondary circuit connectors
13 Pole expanders
14 Position locking device (off)

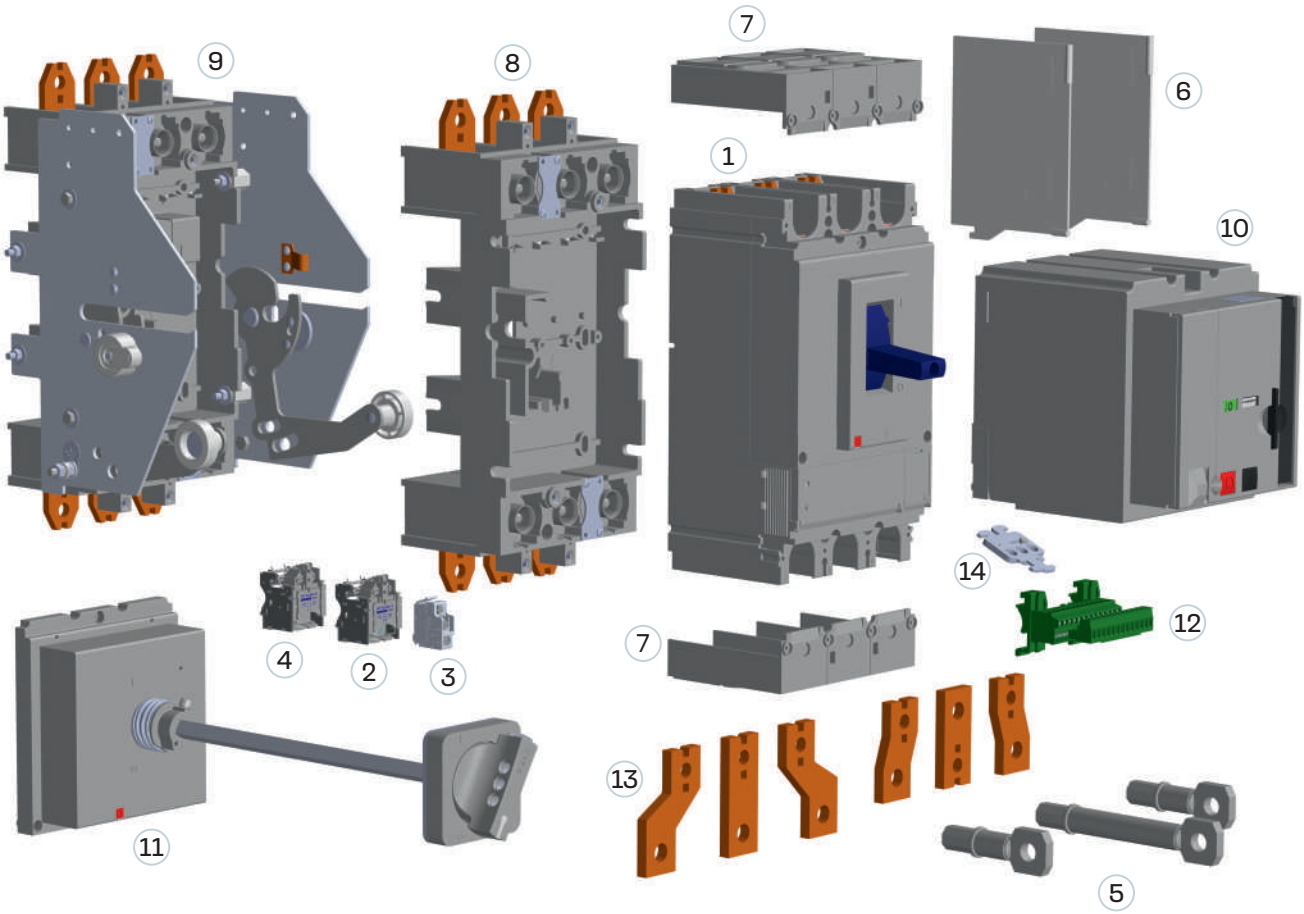

Configuration of OptiMat D800, D1000, D1250 и D1600

1 Circuit breaker
2 Withdrawable circuit breaker
3 Shunt trip
4 Auxiliary contacts (auxiliary and signal contacts)
5 Undervoltage release
6 Terminals for rear connection
7 Inter-pole partitions
8 Terminal cover
9 Motor drive
10 Pole expanders
11 Pole extenders

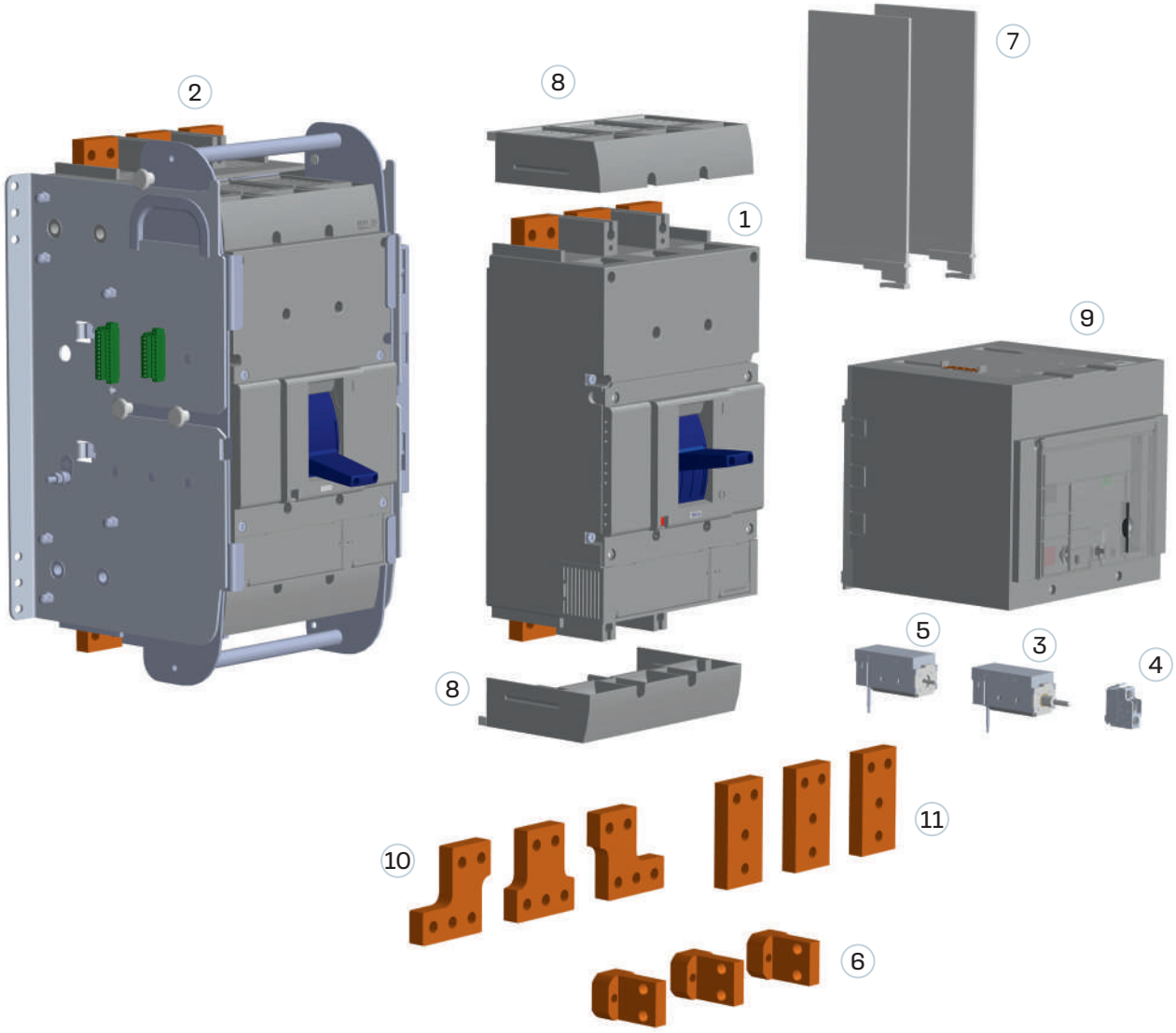

Accessories

Shunt trip

Shunt trip is designed for circuit breaker remote tripping. It is used in DC and AC control circuits with 50 Hz frequency.

Standard size	Version	Code		
		general purpose industrial version	RCS approval	RMRS approval
OptiMat D100, D160, D250, D400 and D630	HP 24DC/48AC	143498	244086	255777
	HP 48DC/110AC	143495	244087	255779
	HP 110DC/230AC	143496	244084	255778
	HP 220DC/400AC	143497	244085	255780
OptiMat D800, D1000, D1250 and D1600	HP 220DC/230AC	281764	353214	developed

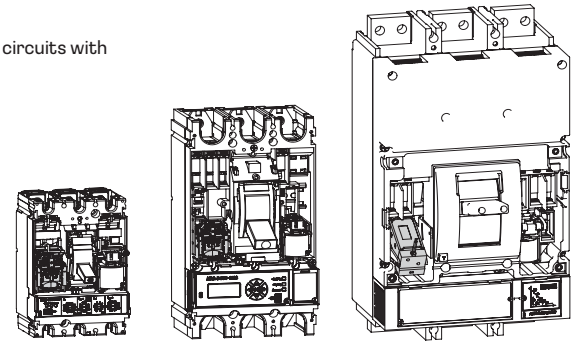

Characteristics	OptiMat D100, D160, D250, D400 and D630				OptiMat D800, D1000, D1250 and D1600
Rated control voltages of the release (Uc), V	24DC/48AC	48DC/110AC	110DC/230AC	220DC/400AC	230AC
Operating voltage range	0,7-1,1 Uc				
Power consumption, VA or W	30				
Control command	Voltage supply for 0.02 to 3 sec				
Maximum consumption current at 110 % Uc (~230 V), A	1				
Maximum tripping time (before the power contacts open), msec	40				

Undervoltage release

The undervoltage release is designed to trip the circuit breaker when the voltage drops below the established standards. The circuit breaker can be re-enabled when the voltage rises above the circuit switching threshold. It is used in DC and AC circuits with 50 Hz frequency.

Standard size	Version	Code		
		general purpose industrial version	приемка РКО	RMRS approval
OptiMat D100, D160, D250, D400 and D630	MP 230AC	254589	255806	255807
	MP 220DC	254586	244081	255805

Characteristics	OptiMat D100, D160, D250, D400 and D630	
Rated control voltage (Uc), V	220DC	230AC
Operating range	0,85-1,1 Uc	
Tripping threshold: deactivation activation	 0,35-07 Uc 0,85 Uc	
Power consumption, VA or W	6	
Operating mode	continuous	

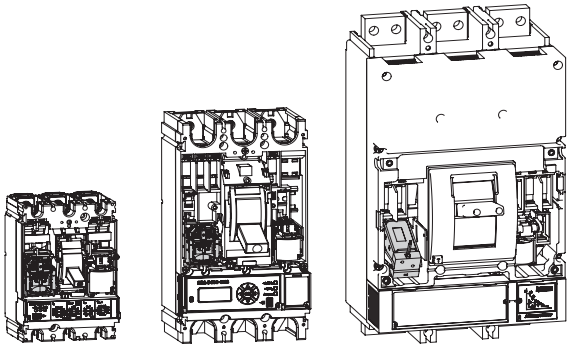

Position locking device (off)

When the position blocking device is «Off», the equipment and personnel is kept save during maintenance checks or commissioning at the facilities by preventing the manual actuation of the circuit breaker. When the circuit breaker is blocked when in off state, circuit is disconnected according to GOST IEC 60947-2. One can also hang 1 to 3 padlocks with 5 to 8 mm shackles (purchased separately).

Product name	Code
Position locking device (off) OptiMat D100, D160, D250, D400, D630-UHL3	290397

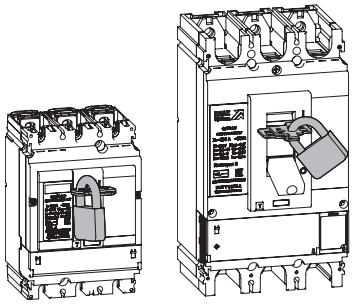

Auxiliary contacts

Auxiliary contacts are designed to signal the status of the circuit breaker as a single design model and are installed in the circuit breaker sockets, according to the table below. Functions of auxiliary contacts are changed depending on the socket where they are installed (see Circuit diagrams of OptiMat D circuit breakers):
VK1...VK4 — auxiliary contacts of alarm of switching state of the main contacts (closed/open).
SK1 — alarm contact of deactivation of the circuit breaker with mechanism release due to:
- tripping of protection releases;
- tripping of shunt trip or undervoltage release;
- pressing the test button; or
- pressing the motor drive alarm button.
SK2 — signal contact of emergency shutdown of the circuit breaker due to tripping of the protection release. Maximum number of auxiliary contacts is shown in the table:

	Type	Code				Available contacts		
		general purpose industrial version		RCS approval	RMRS approval	OptiMat D250	OptiMat D630	OptiMat D1600
Set of auxiliary contacts VK/ SK1/SK2	VK	314967 (1 pcs.)	143490 (4 pcs.)	244078 (4 pcs.)	255772 (4 pcs.)	2	4	
	SK1					1		
	SK2					1		

Characteristics	Alternating current (AC)					Direct current (DC)			
Rated voltage (Uc), V	24	48	110	230	400	24	48	110	250
Rated operating current (Ic), A	6	6	5	4	2	3	1,5	0,5	0,2

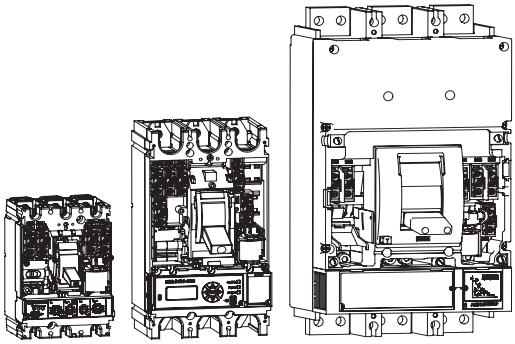

Rear connection kit

Terminals for rear connection of conductors allow to install OptiMat D circuit breakers in low-voltage complex devices for distribution and double-sided controls - in locations where rear-connected busbars and conductors with cable lugs are required. They are orientable and can be positioned both vertically and horizontally.
Terminals for OptiMat D100-D250 and OptiMat D400-D630 are supplied individually and have two versions: long and short. Rear connection terminals of OptiMat D800-1600 are used for fixed and withdrawable designs of circuit breakers and are supplied in a set of 3 pieces. It is recommended to use terminal covers with the rear connection set.

Product name	Code		
	general purpose industrial version	RCS approval	RMRS approval
Rear connection kit OptiMat D100, D160, D250 63-250A-long	238709	353198	327483
Rear connection kit OptiMat D100, D160, D250 63-250A-short	234089	244077	327484
Rear connection kit OptiMat D100, D160, D250 16-50A-long	313954	353196	255811
Rear connection kit OptiMat D100, D160, D250 16-50A-short	313955	353197	255810
Rear connection kit OptiMat D400, D630 320-630A-long	238710	244094	255812
Rear connection kit OptiMat D400, D630 320-630A-short	234090	244095	255813
Rear connection kit OptiMat D800, D1000, D1250, D1600-UHL3-3 pcs.	272308	on request	on request

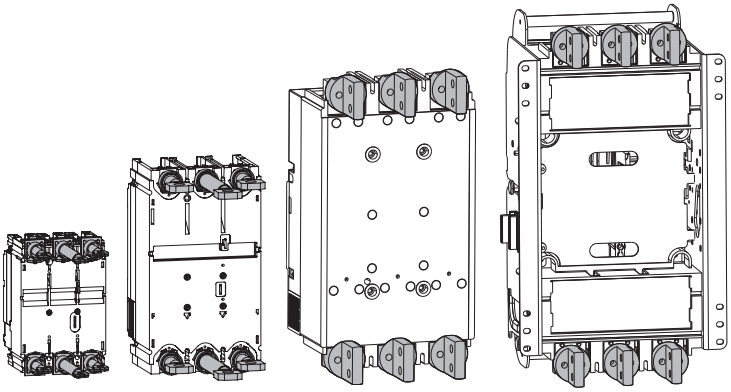

Pole expanders and extenders

Pole expanders allow you to increase the pole-to-pole distance of OptiMat D circuit breakers for easy connection of large busbars and cable lugs. Pole extenders for OptiMat D800-1600 allow the connection of several cable lugs or busbars. Pole expanders and extenders for OptiMat D800-1600 can be installed on both fixed and withdrawable circuit breakers. OptiMat D expanders and extenders are supplied as a set of 3 terminals.

Standard size	Product name	Code		
		general purpose industrial version	RCS approval	RMRS approval
OptiMat D100, D160, D250	Pole expanders OptiMat D100, D160, D250-UHL3-3 pcs.	255857	353215	327488
OptiMat D400, D630	Pole expanders OptiMat D400, D630-UHL3-long-3 pcs.	258210	353216	327489
	Pole expanders OptiMat D400, D630-UHL3-short-3 pcs.	252558	353217	327490
OptiMat D800, D1000, D1250, D1600	Pole expanders OptiMat D800, D1000, D1250, D1600-UHL3-3 pcs.	294399	on request	on request
	Pole expanders OptiMat D800, D1000, D1250, D1600-UHL3-3 pcs.	294400	on request	on request

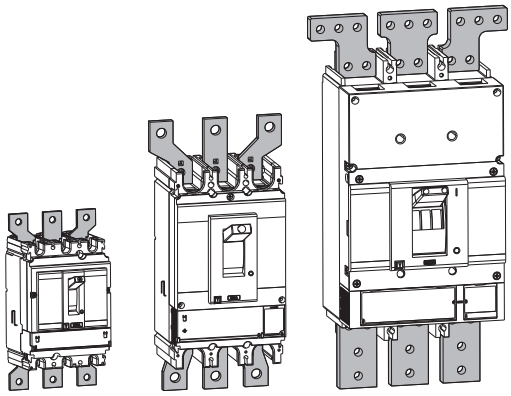

Remote manual drive

Remote manual drive allows controlling the device installed deep into the cabinet from the front cabinet panel. It supports the following functions:
Mechanic blocking of door when the device is on.
1) Remote manual drive is equipped with a locking device coupled to the extension axis.
It blocks the door if the circuit breaker is «on» or in «emergency shutdown» position. To open the door when the circuit breaker is on, override the blocking using a tool. It is impossible to do it if the handle is blocked by padlocks.

2) Forced neutralization of mechanic door blocking.
A handle can be reworked at the site to fully override door blocking, including blocking with padlocks. However, if necessary, door blocking can be restored. If there are several remote manual drives on one door, this functions of forced neutralization allows blocking the door from one device.

3) Blocking the device and door with padlocks.
Padlocks can be used to block the circuit breaker control handle and prevent the door from opening in the «off» position using one to three padlocks Ø 5–8 mm (not included in delivery). If the door control has been modified to provide forced neutralization of door blocking, padlocks do not block the door yet block the device control handle preventing circuit switching.

Also, up to two early-action contacts (standard universal auxiliary contacts) can be installed in the handle of the manual remote drive, which allows you to connect external circuits (for example, undervoltage relays) before closing the power contacts of the circuit breaker.

Standard size	Code		
	general purpose industrial version	RCS approval	RMRS approval
Remote manual drive OptiMat D100, D160, D250-UHL3	240958	353212	244103
Remote manual drive OptiMat D400, D630-UHL3	240959	353213	244105

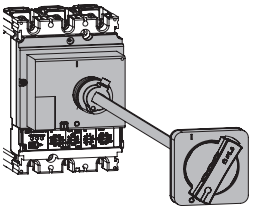

OptiMat D100 and D250

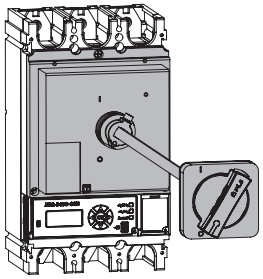

OptiMat D400 and D630

Motor drive

OptiMat D circuit breakers can be equipped with a motor drive with an energy storage device to close and open the circuit breaker. It is designed for remote and manual circuit breaker operation. Control modes: electric (auto) or manual (P).

Standard size	Version	Product name	Code		
			general purpose industrial version	RCS approval	RMRS approval
OptiMat D100, D160, D250	230 V AC	Motor drive OptiMat D100, D160, D250-230AC-U3	247695	353208	255817
	220 V DC	Motor drive OptiMat D100, D160, D250-220DC-U3	260101	developed	developed
	110 V DC	Motor drive OptiMat D100, D160, D250-110DC	340751	developed	developed
OptiMat D400, D630	230 V AC	Motor drive OptiMat D400, D630-230AC-U3	233121	244100	255815
	220 V DC	Motor drive OptiMat D400, D630-220DC-U3	260102	353210	developed
	110 V DC	Motor drive OptiMat D400, D630-110DC-U3	340752	developed	developed
OptiMat D800, D1000, D1250, D1600	230 V AC	Motor drive OptiMat D800, D1000, D1250, D1600-230AC-U3	250716	353211	developed

Characteristics	OptiMat D100-D160-D250	OptiMat D400-D630	OptiMat D800-D1000-D1250-D1600
Operating voltage range (Us), V	0,85-1,1		
Power, VA/W	550	500	200
Starting power, VA/W	550	800	500
Charge time, s	≤3		≤4
Total closing time, s	≤0,08	≤0,08	≤0,1
Total opening time, s	≤1	≤1	≤4
Maximum number of cycles per minute	5	4	4

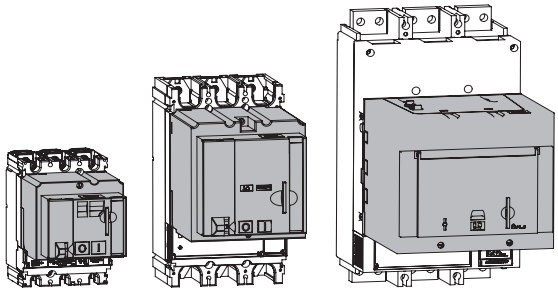

Plug-in connection kit OptiMat D100-630

The kit includes a fixed part of the plug-in version and parts for converting the circuit breaker into a plug-in version. The fixed part is a base for mounting the moveable part of the plug-in circuit breaker. It can be installed on the mounting plate in different ways, with front or rear connection. Universal terminals of the fixed part provide front and rear orientable connections (horizontal and vertical).
Circuit breaker is connected to the base with the help of plug-in terminals (included in the scope of supply). It is recommended to additionally use terminal covers to insulate the connection. With plug-in connection kit, one can quickly remove the circuit breaker, check or replace it. At that, the power cables and busbars remain connected to the fixed base. One can also install redundant output lines in the cabinet for further installation of circuit breakers. A special interlock (included in the scope of supply) automatically disables the unit when it is inserted or removed while the unit is on, while still allowing commutation of the removed appliance.

Product name	Code		
	general purpose industrial version	RCS approval	RMRS approval
Plug-in connection kit OptiMat D100, D160, D250 63-250A-UHL3	234092	353201	244096
Plug-in connection kit OptiMat D100, D160, D250 16-50A-UHL3	313956	353200	327485
Plug-in connection kit OptiMat D400, D630 320-630A-UHL3	234091*	353202*	244097*

* When OptiMat D630 circuit breakers are used together with plug-in connection set OptiMat D400...630-UHL3, maximum allowable current with the temperature within the set limits of GOST R 50030.2-2010 totals 570 A.

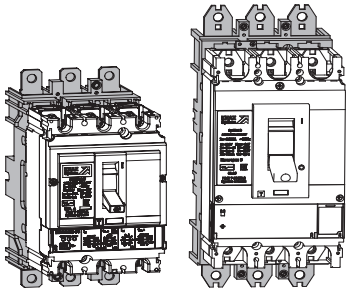

Withdrawable circuit breakers OptiMat D100-630

In addition to functions of a plug-in connection, a withdrawable chassis makes device control easier. It offers three positions that can be chosen after the mechanical locking is released by the retainers:
1) «Drawn in»: power circuit is on;
2) «Drawn out»: power circuit is off, one can switch the device to check the secondary circuits;
3) «Removed»: the device is removed from the chassis.
A withdrawable chassis design can imply the installation of immovable chassis parts on the base and moveable chassis parts directly on the device. It is recommended to additionally use terminal covers to insulate the connection. Withdrawable design provides for a visible clearance during commissioning.
A special interlock (included in the scope of supply) automatically disables the unit when it is installed or removed while the unit is on, and still allows commutating the removed appliance. The withdrawable version of OptiMat D100-630 is equipped with position contacts as a standard: drawn in/drawn out (2 contacts rolled-in and 2 contacts drawn out).

Designations	Code		
	general purpose industrial version	RCS approval	RMRS approval
Withdrawable connection kit OptiMat D100, D160, D250 63-250A-UHL3	239381	353204	244098
Withdrawable connection kit OptiMat D100, D160, D250 16-50A-UHL3	313957	353203	327486
Withdrawable connection kit OptiMat D400, D630 320-630A-UHL3	234093*	353205*	244099*

* When OptiMat D630 circuit breakers are used together with extended connection set OptiMat D400...630-UHL3, maximum allowable current with the temperature within the set limits of GOST R 50030.2-2010 totals 570 A.

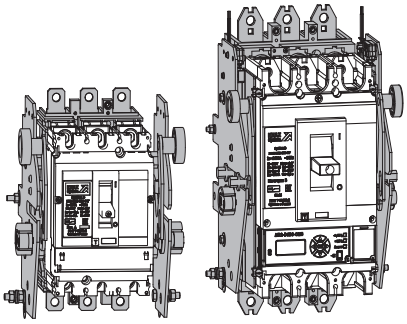

Withdrawable circuit breakers OptiMat D800-1600

The OptiMat D800-1600 withdrawable circuit breaker (version D) is supplied assembled with a fixed part, which as standard has front terminals for connecting bars and cable lugs.
The withdrawable design ensures convenient and safe operation, and also has three clear positions in the fixed part: Drawn in, Tested and Drawn out. In each position the circuit breaker can be locked with a padlock.
The withdrawable circuit breaker is also equipped with circuit breaker state signaling contacts in the fixed part as standard: Drawn in, Test, Drawn out and connectors for connecting/disconnecting secondary circuits of electrical accessories.

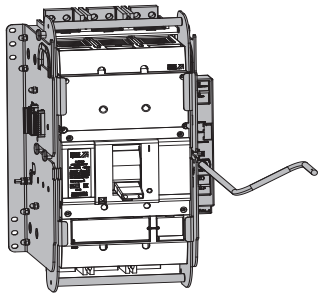

External connectors for electrical accessory circuits of plug-in and withdrawable circuit breakers

For OptiMat D100-630 circuit breakers of plug-in or withdrawable design, the circuits of additional electrical accessories can be disconnected/connected using an external secondary circuit connector.
The secondary circuit connector consists of two parts — an MSTB plug and a UMSTBVK socket with 13 terminals for connecting circuits. The MSTB plug has high electrical capacity and low resistance, which allows for efficient signal transmission and stable operation of secondary circuits. The socket for secondary circuits UMSTBVK allows you to significantly reduce the time and costs of electrical wiring. It allows you to easily connect and disconnect secondary circuits, which simplifies maintenance and upgrading of the system. The connector can be installed on a din-rail.

Product name	Code		
	general purpose industrial version	RCS approval	RMRS approval
Socket for secondary circuits UMSTBVK-2.5/13-OptiMat/BA57-UHL3	273633	on request	on request
Plug for secondary circuits MSTB-2.5/13-OptiMat/BA57-UHL3	273632	on request	on request

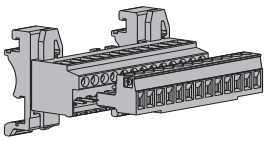

Terminal covers

Terminal covers for OptiMat D circuit breakers are used to prevent accidental contact with terminals and provide additional pole-to-pole insulation. Low terminal covers are recommended for the terminals of the moving part of circuit breakers of plug-in and withdrawable designs, as well as for rear connection of fixed circuit breakers OptiMat D100-D630, as well as for fixed and withdrawable circuit breakers OptiMat D800-D1600.

Product name	Code		
	general purpose industrial version	RCS approval	RMRS approval
Terminal cover OptiMat D100, D160, D250-UHL3-2 pcs.	232987	244079	255773
Terminal cover OptiMat D400, D630-UHL3-2 pcs.	251068	256941	on request
Terminal cover OptiMat D800, D1000, D1250, D1600-UHL3-2 pcs.	298993	353207	on request

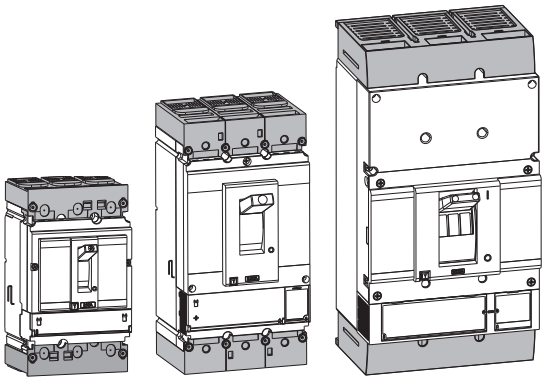

Overall dimensions (mm)

Stationary OptiMat D100, D160, D250

Front terminals

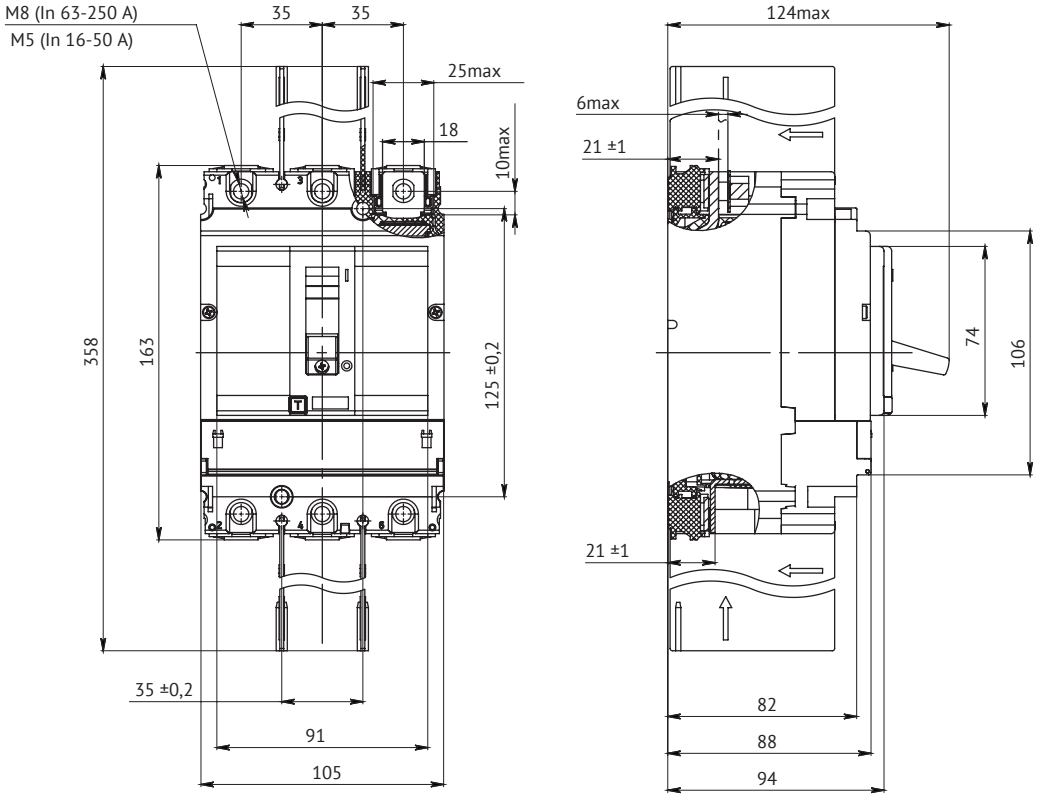

Rear terminals

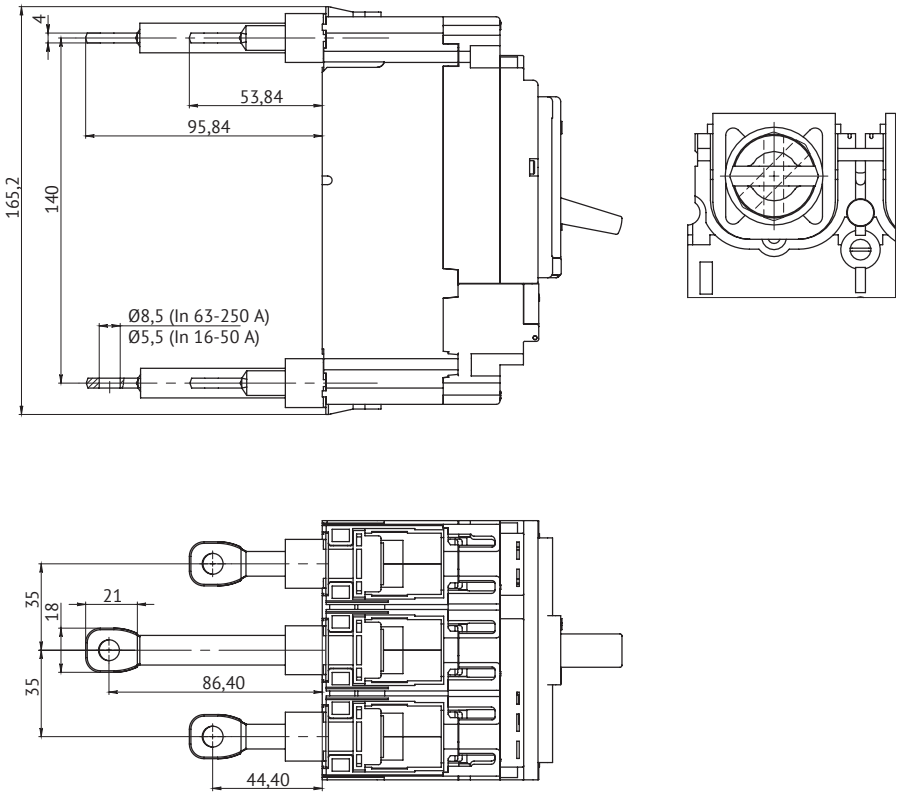

Pole expanders

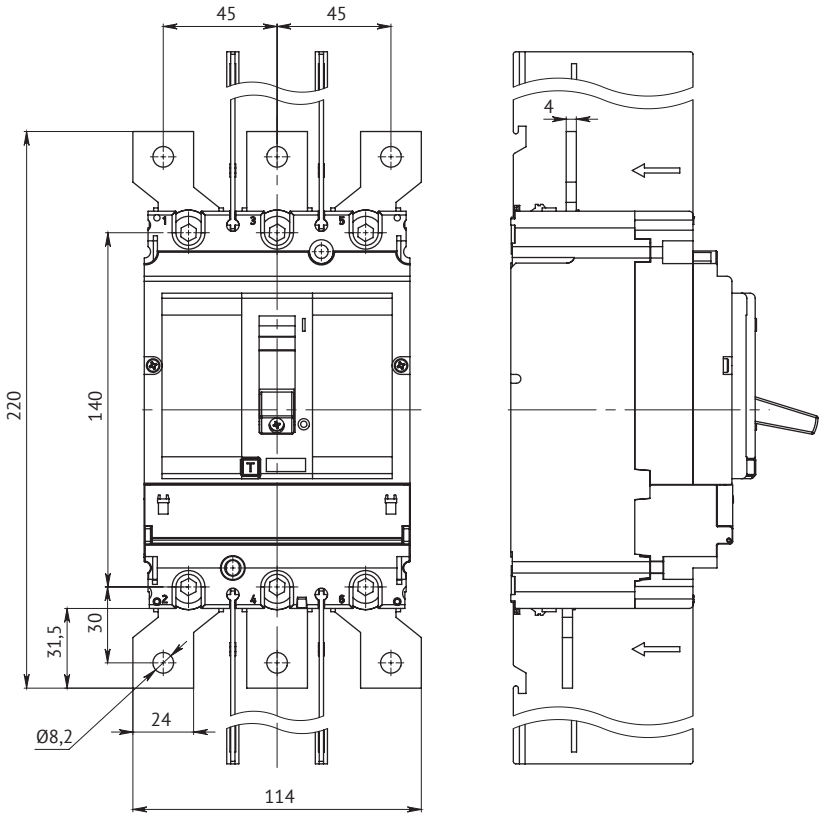

Cable connection clamps and terminal covers

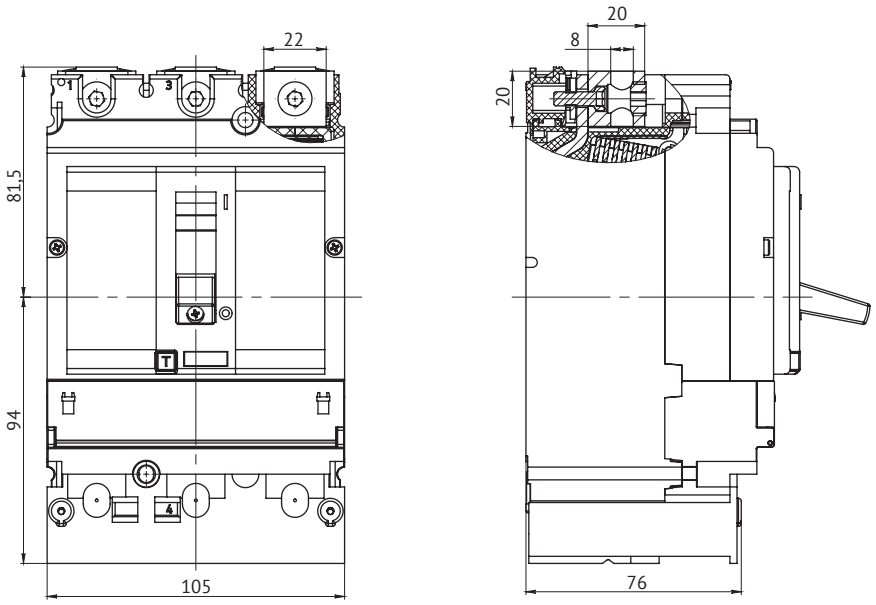

Clamps for connecting two cables and long terminal covers

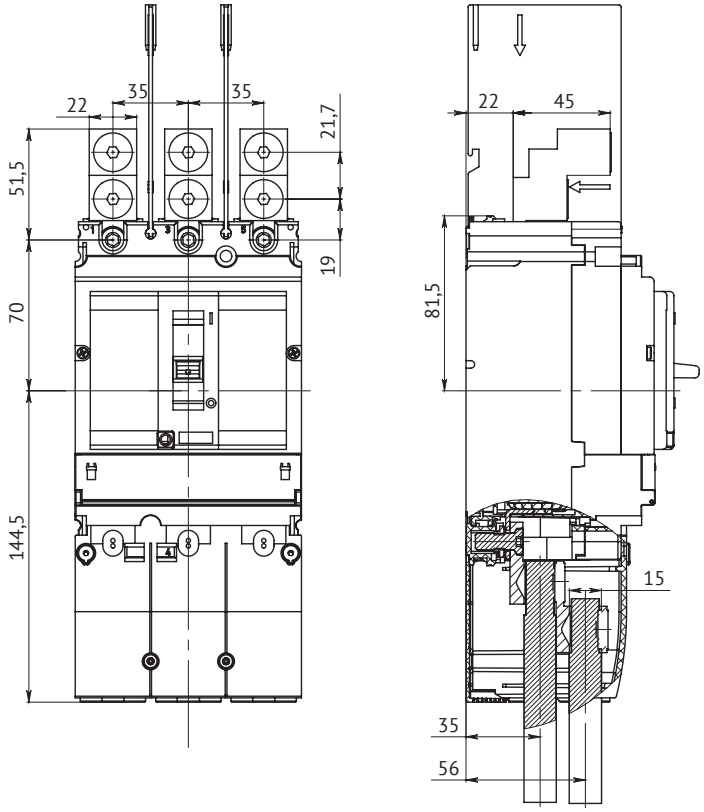

Remote manual drive

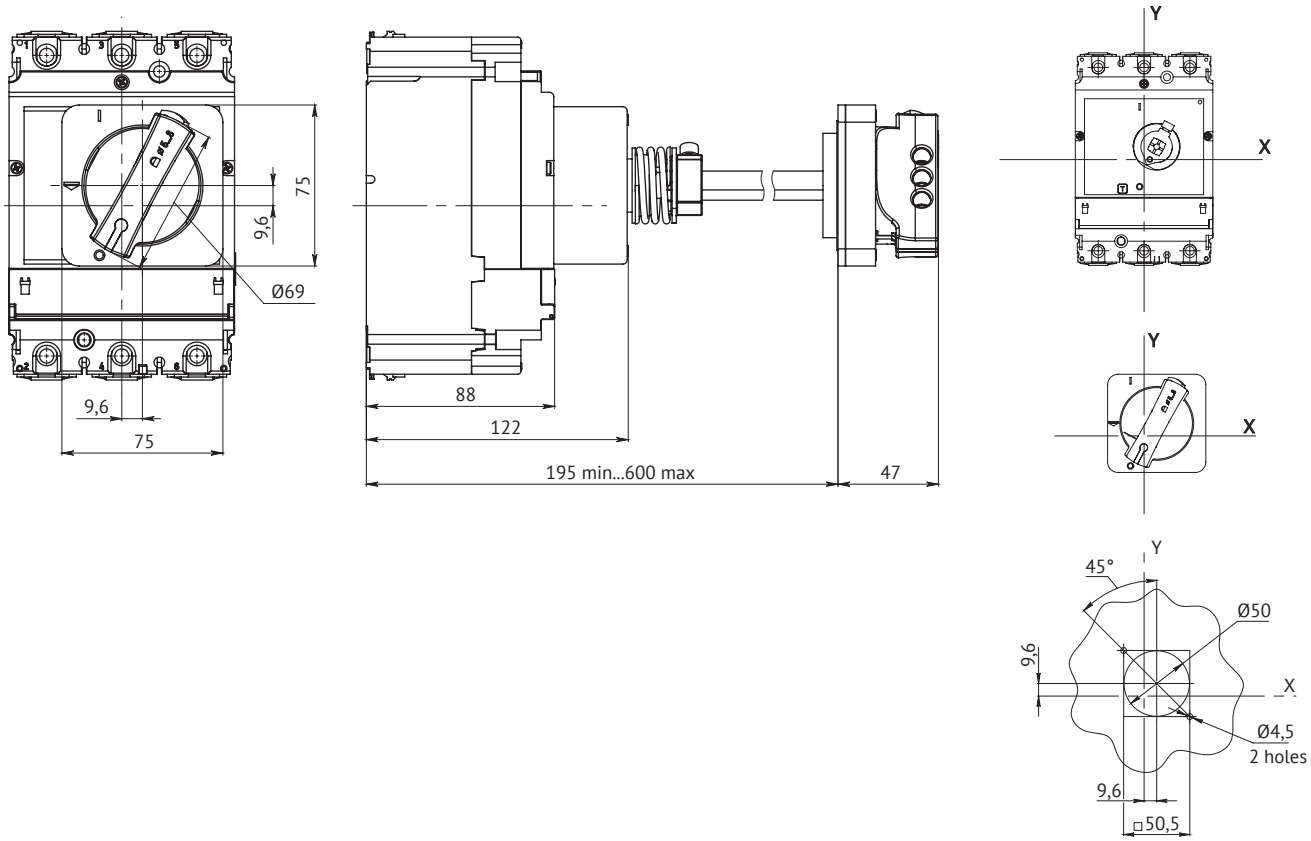

Motor drive

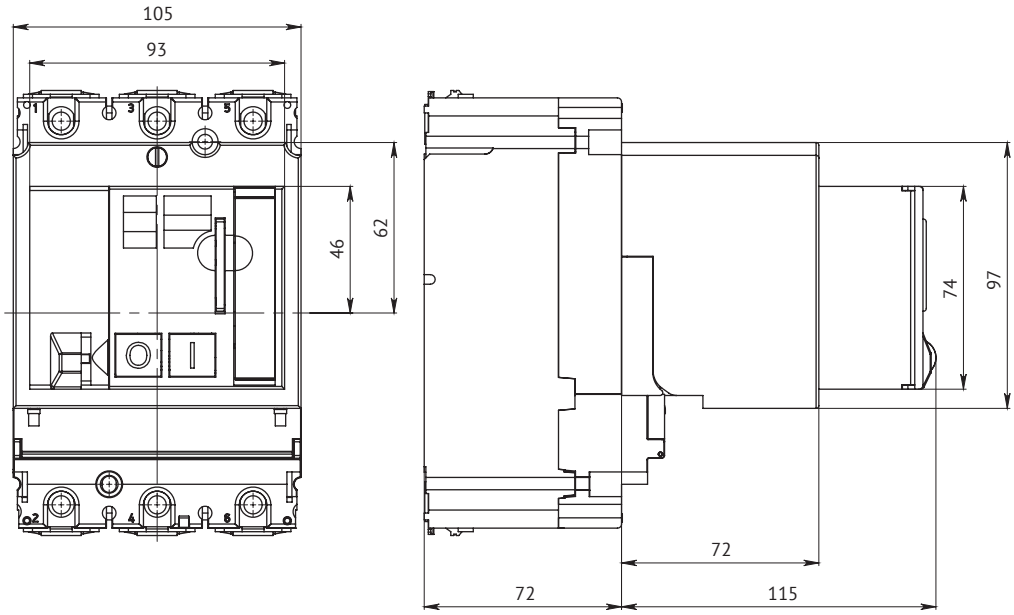

Plug-in OptiMat D100, D160, D250

Front terminals

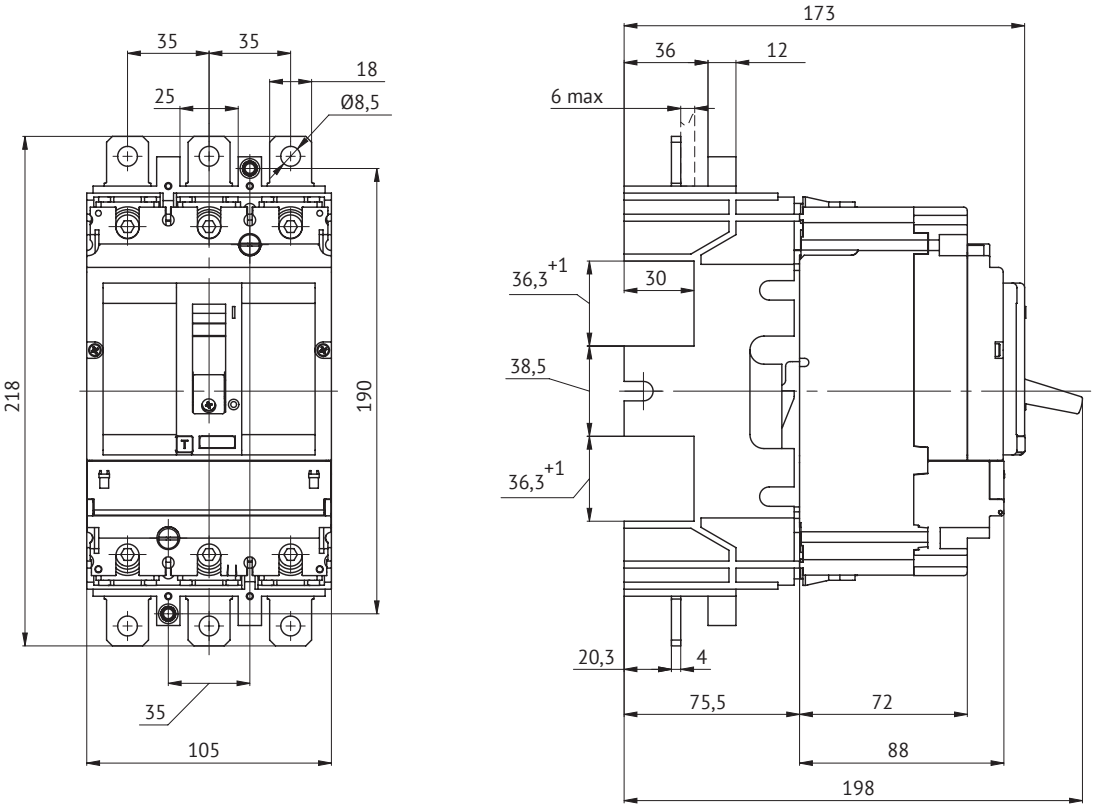

Rear orientable terminals

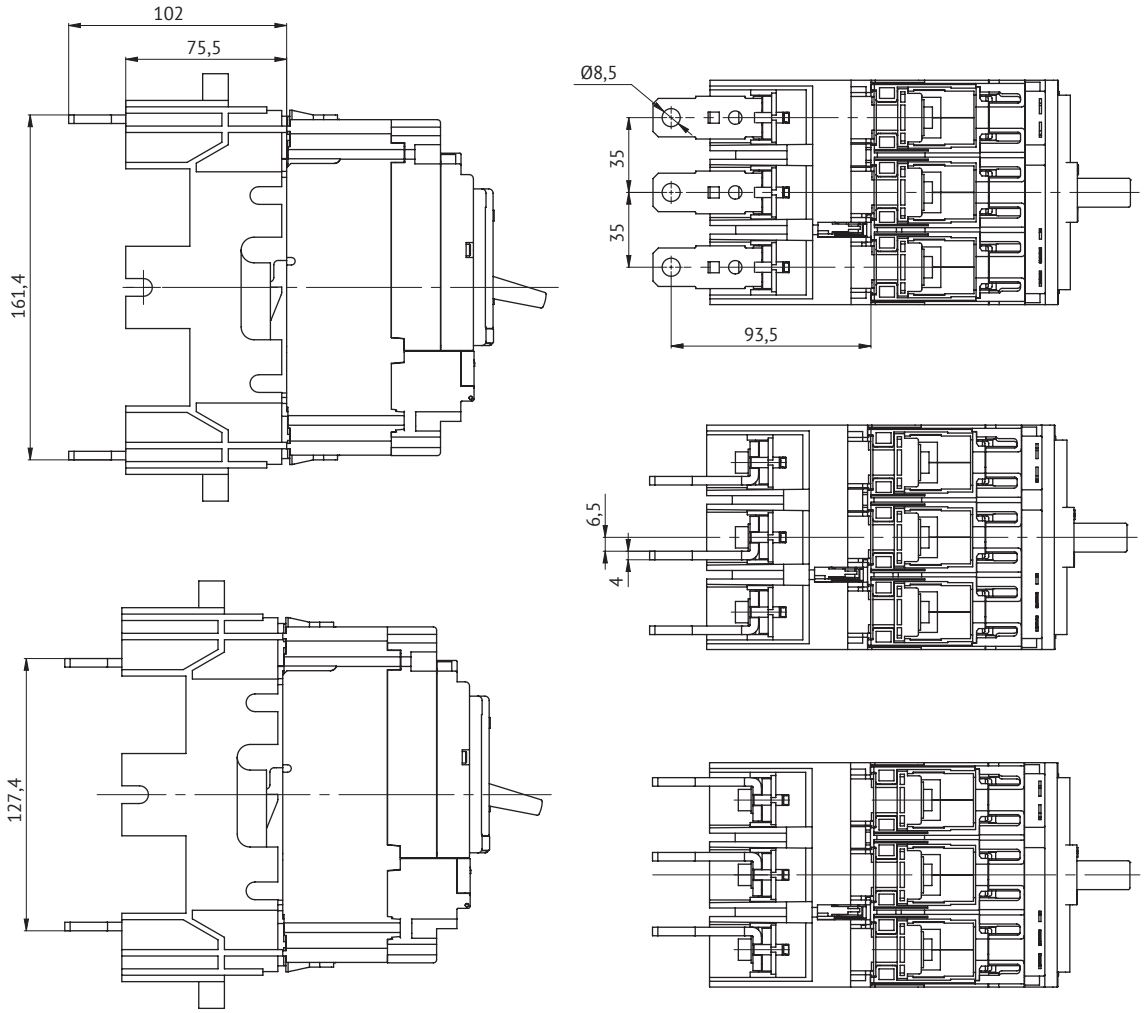

Motor drive

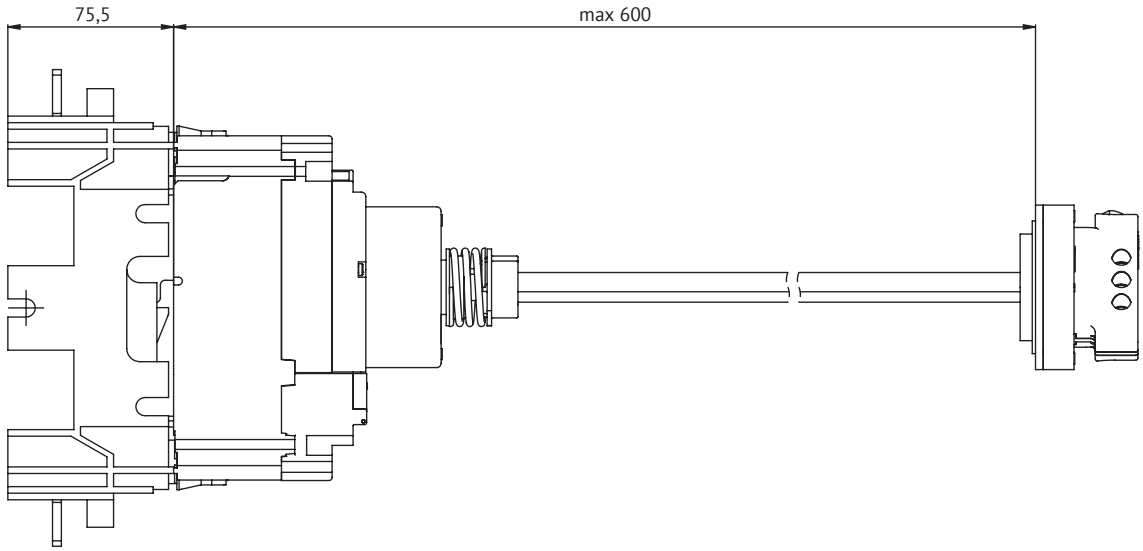

Withdrawable OptiMat D100, D160, D250

Front terminals

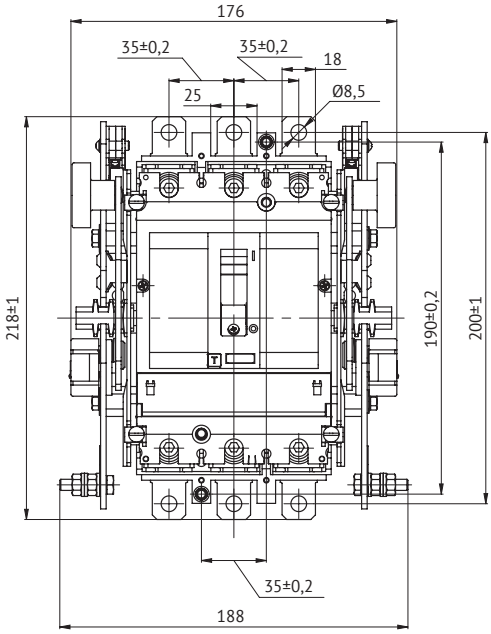

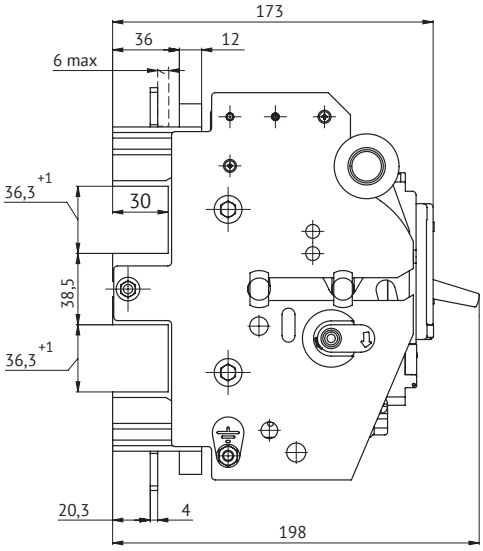

Motor drive

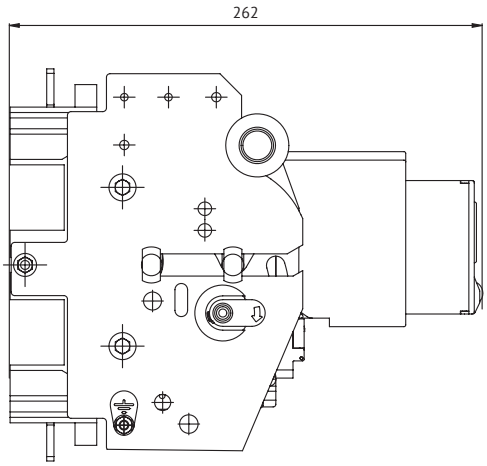

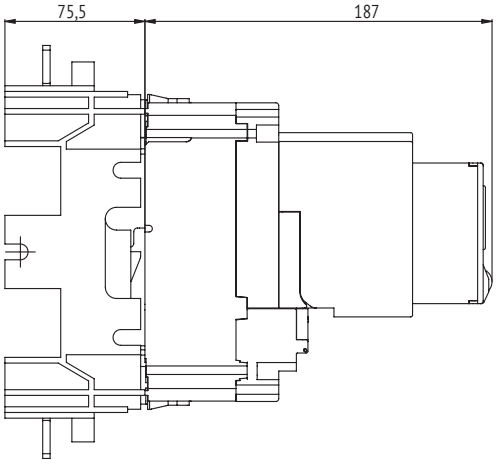

Remote manual drive

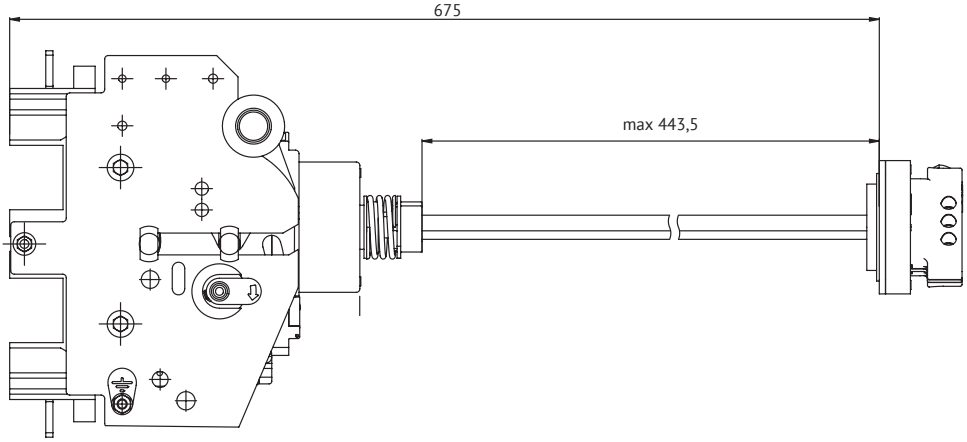

Stationary OptiMat D400, D630

Front terminals

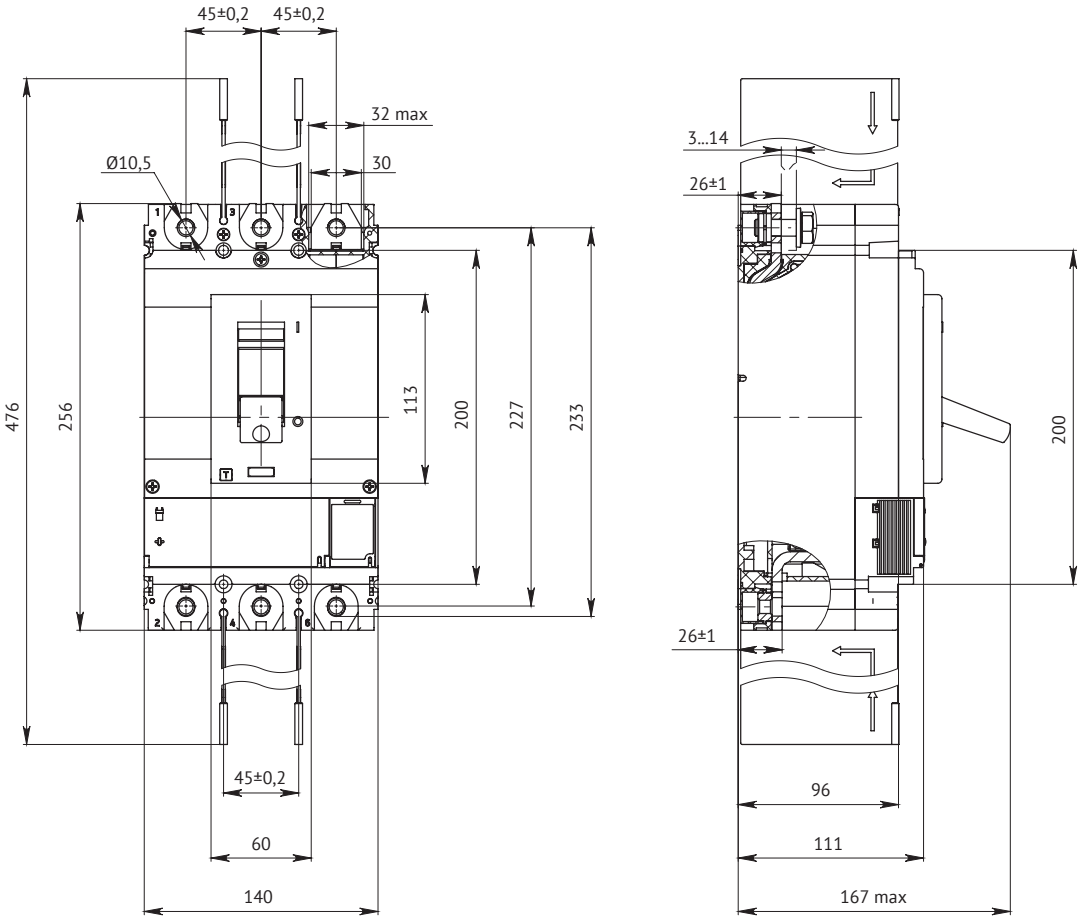

Rear terminals

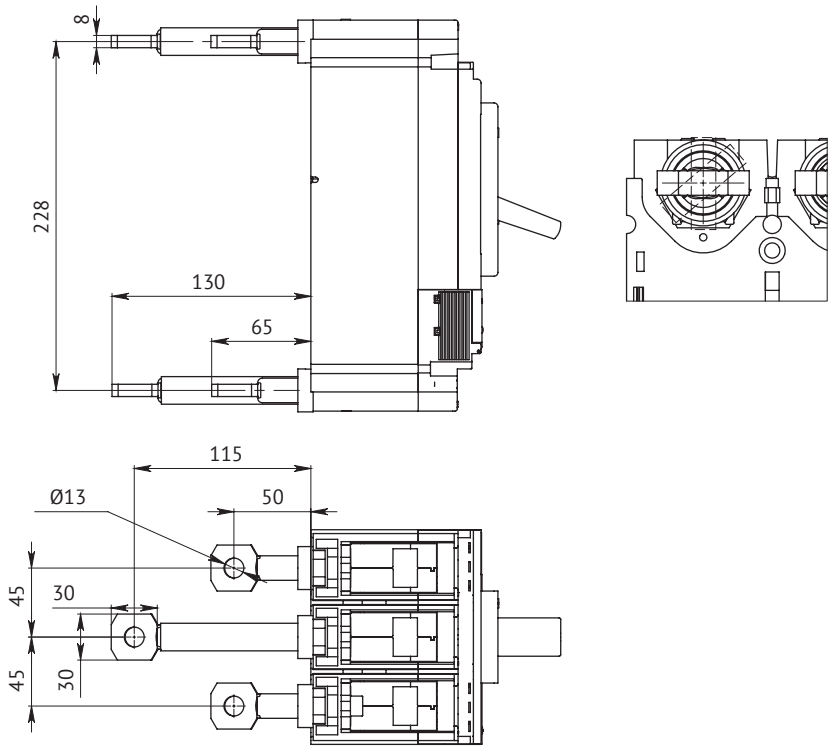

Pole expanders

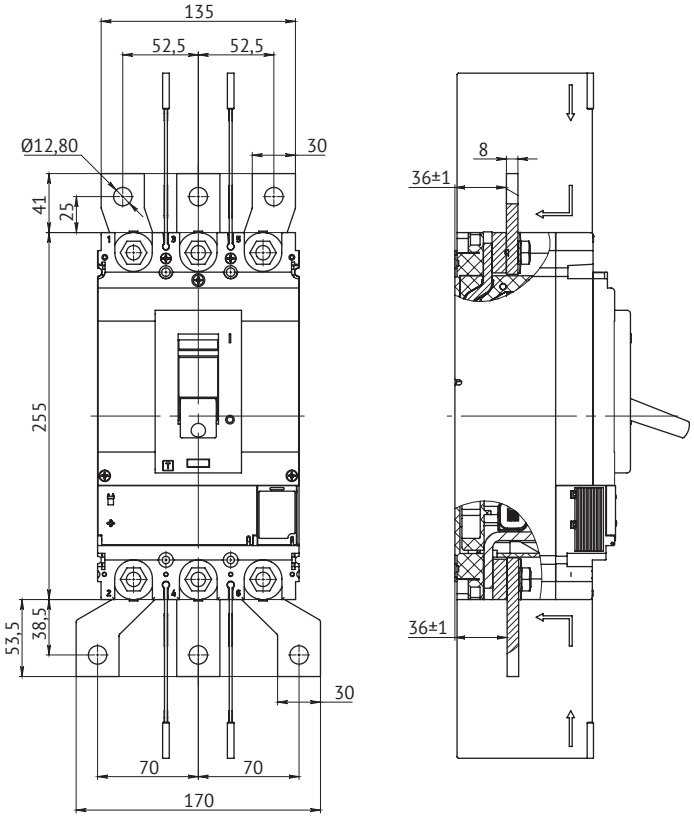

Clamps for connecting one and two cables, and long power terminal covers

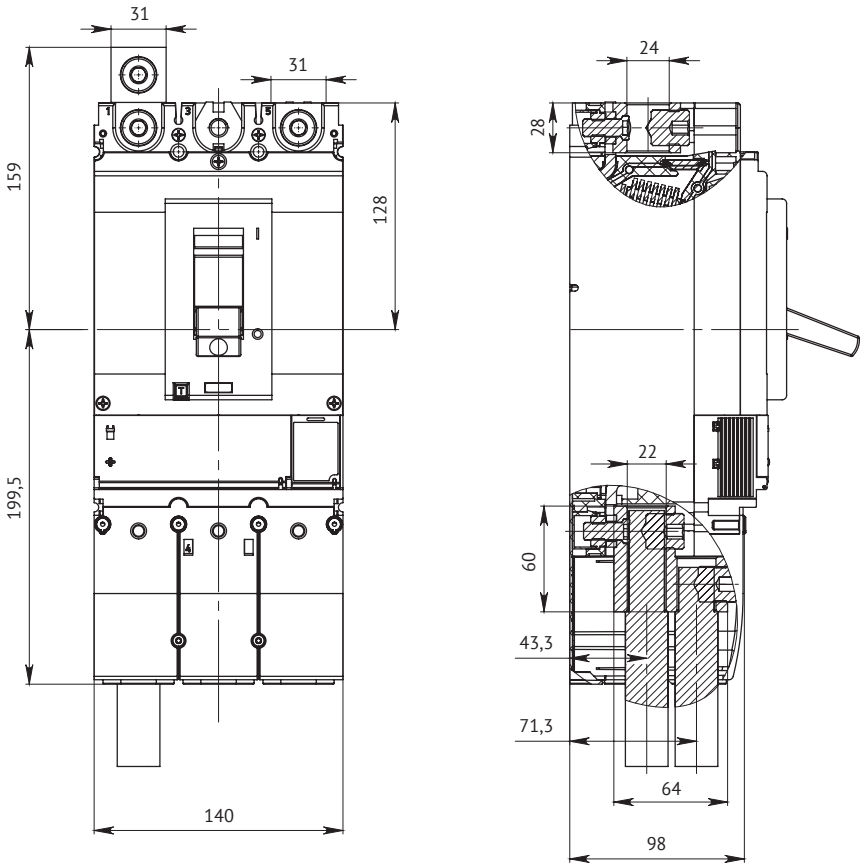

Remote manual drive

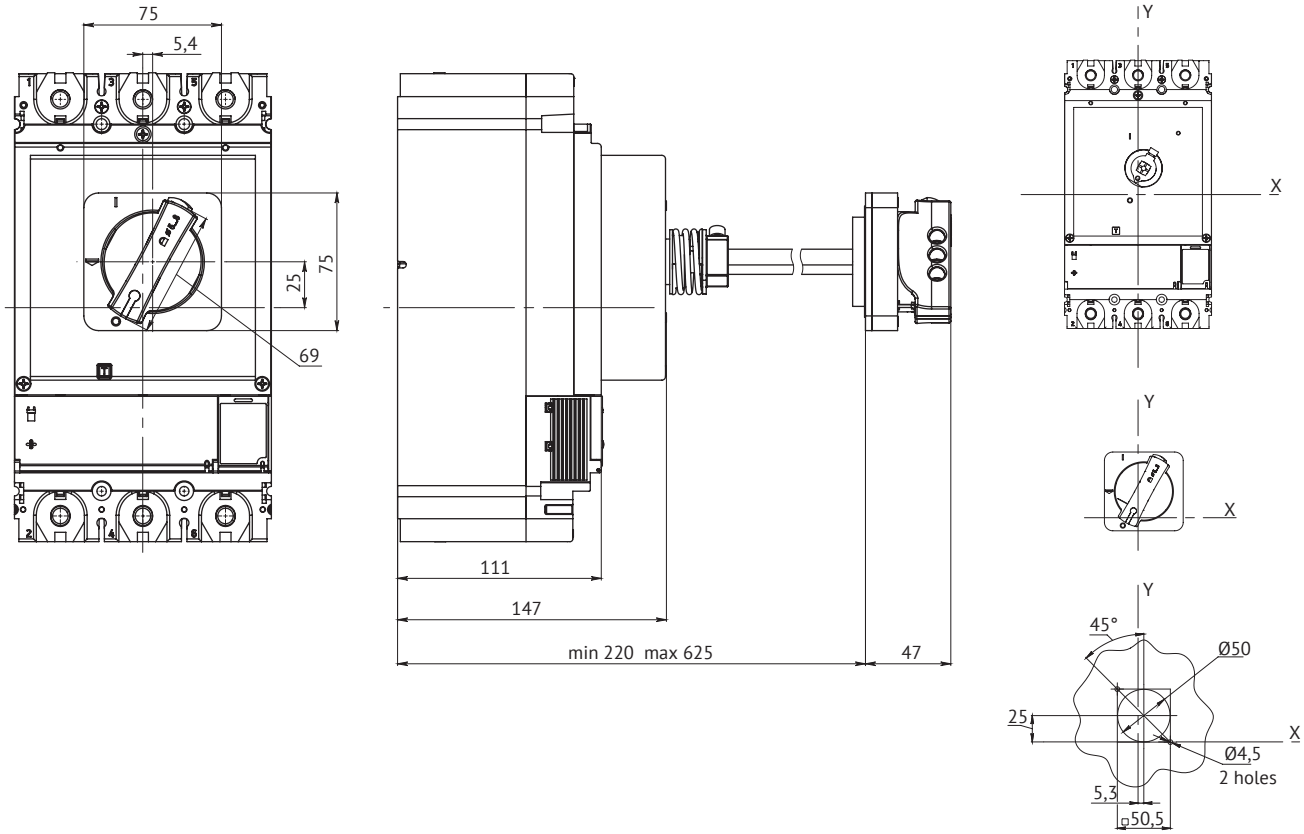

Motor drive

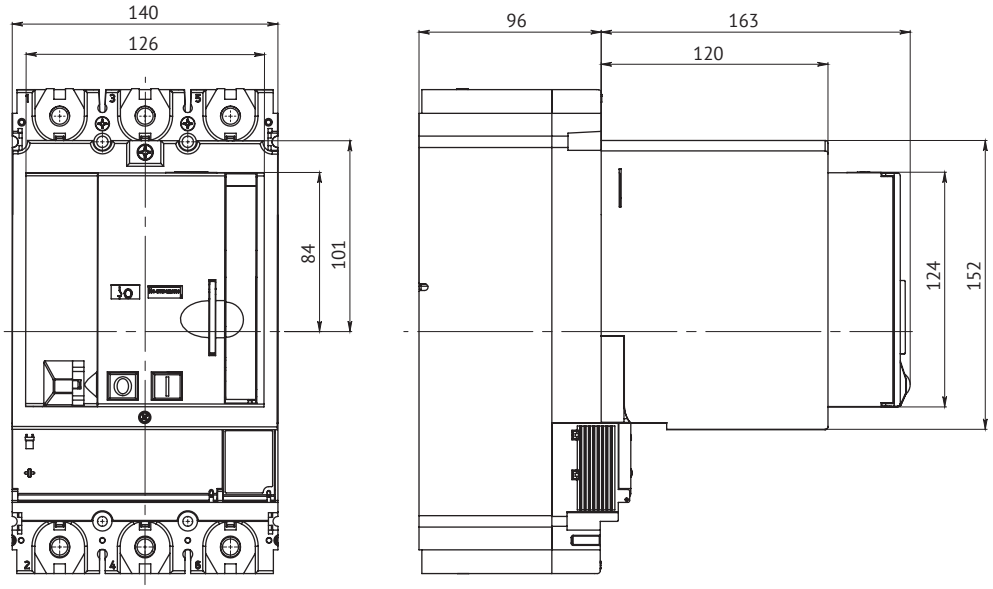

Plug-in OptiMat D400, D630

Front terminals

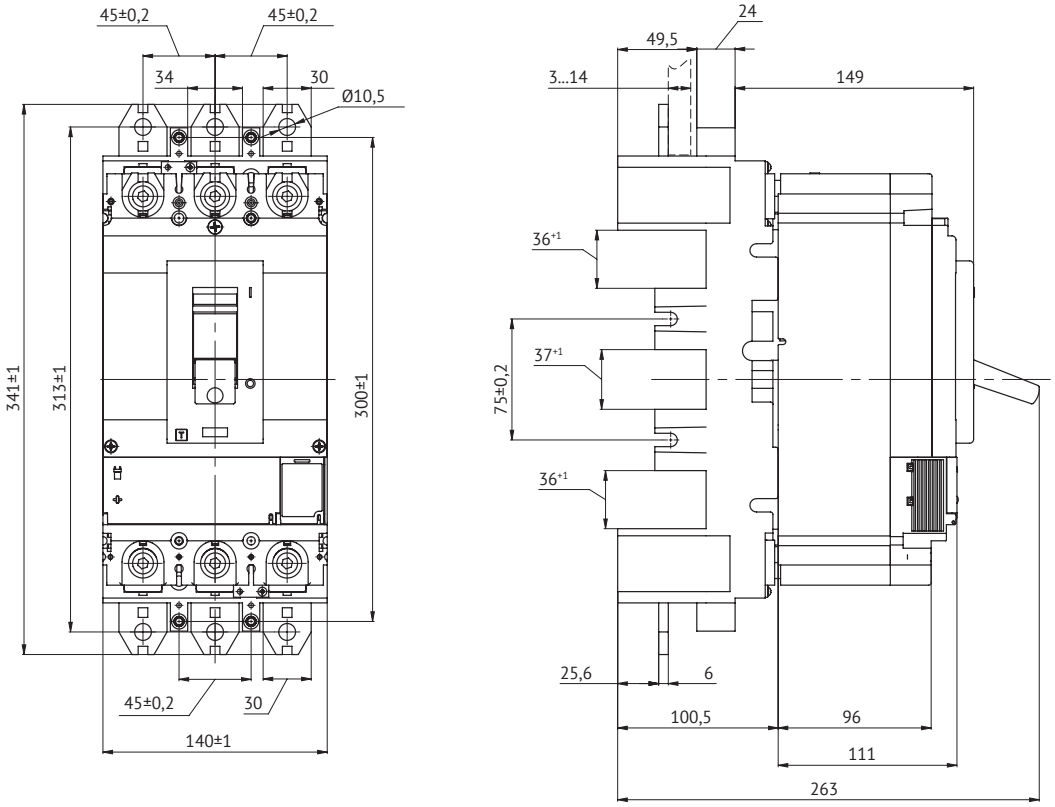

Rear orientable terminals

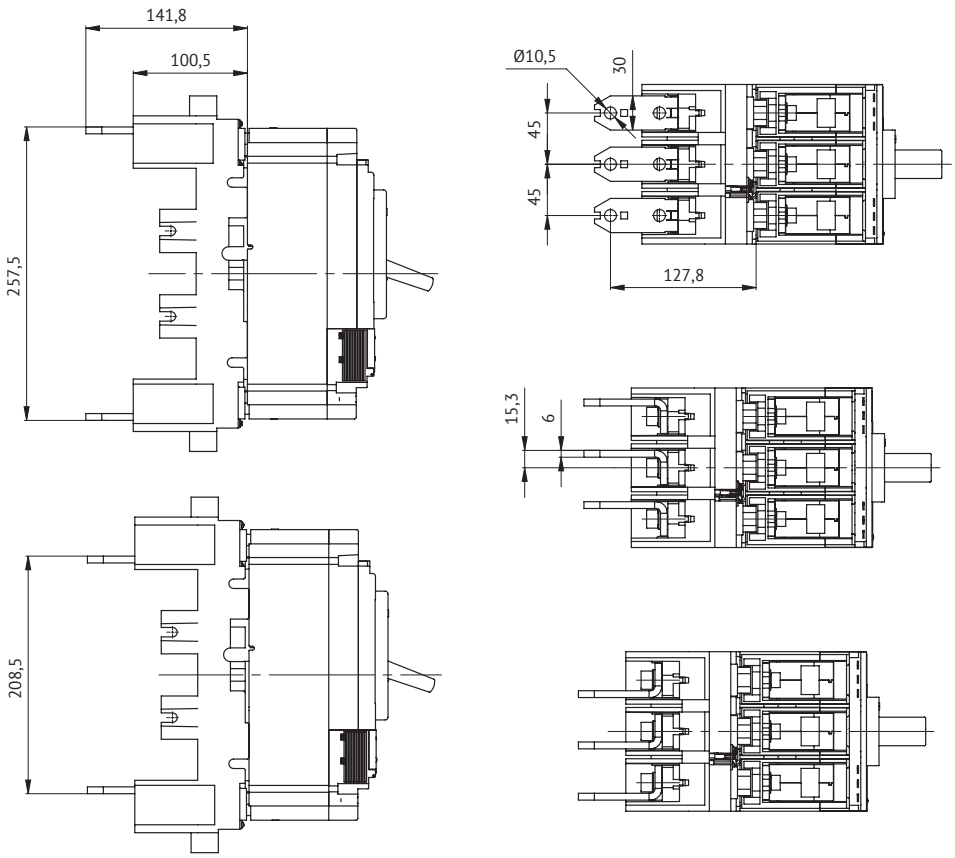

Withdrawable OptiMat D400, D630

Front terminals

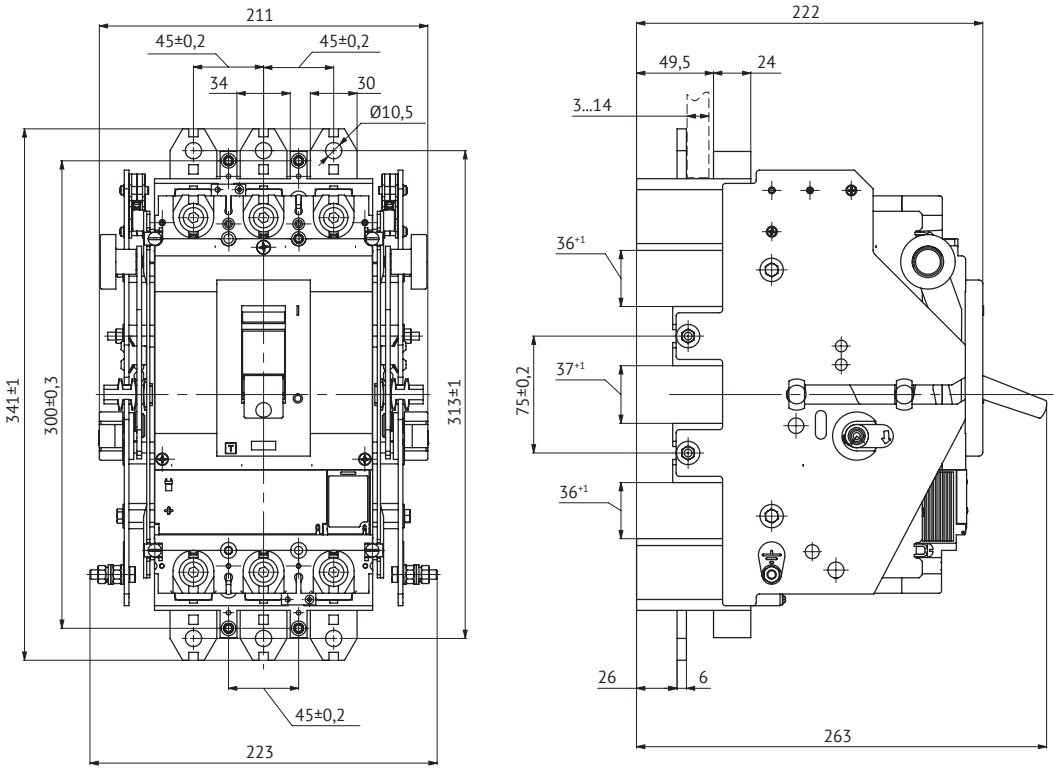

Stationary OptiMat D800, D1000, D1250 and D1600

Front terminals

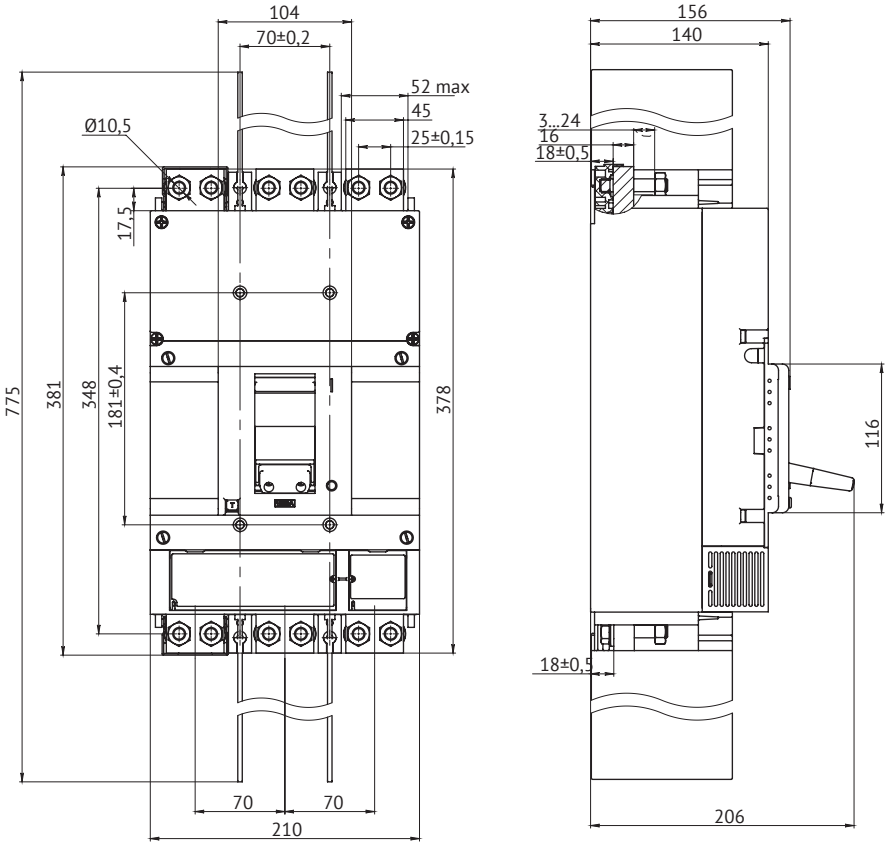

Pole expanders and extenders

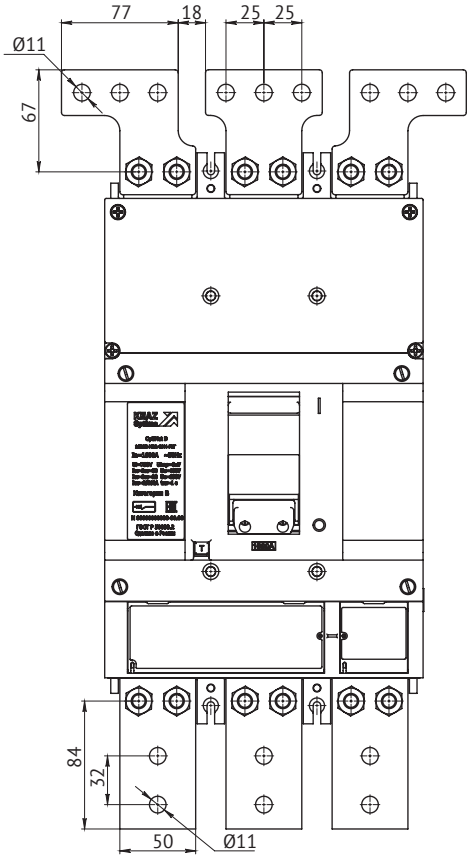

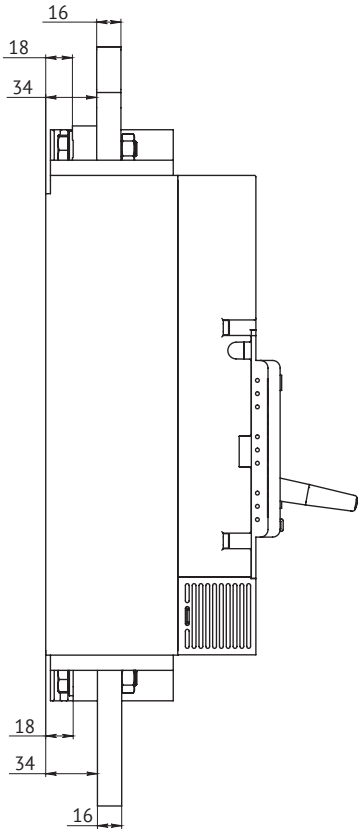

Rear vertical terminals and terminal covers

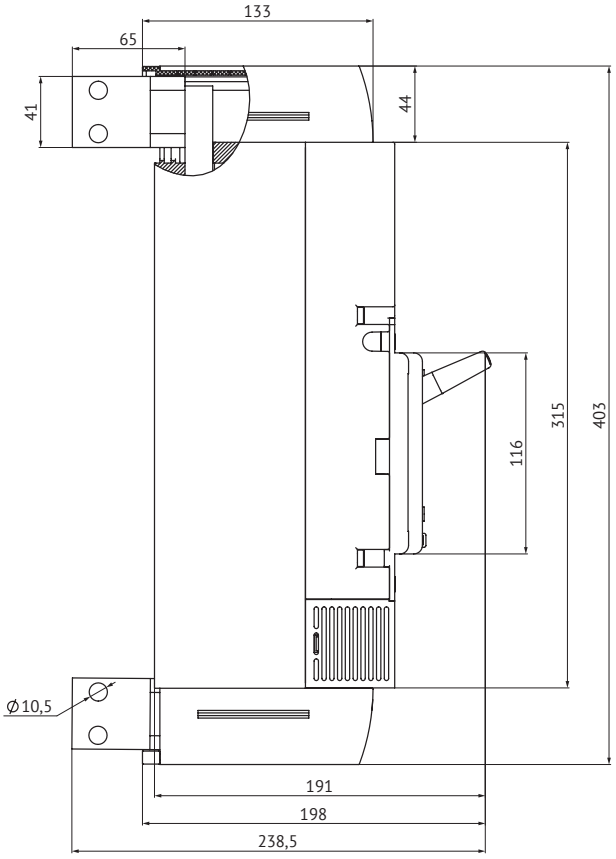

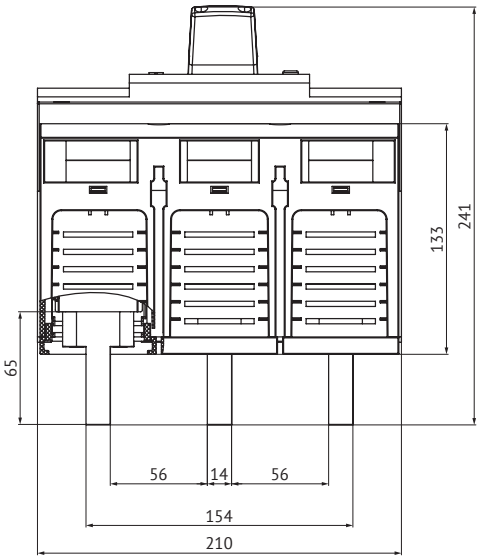

Rear horizontal terminals and terminal covers

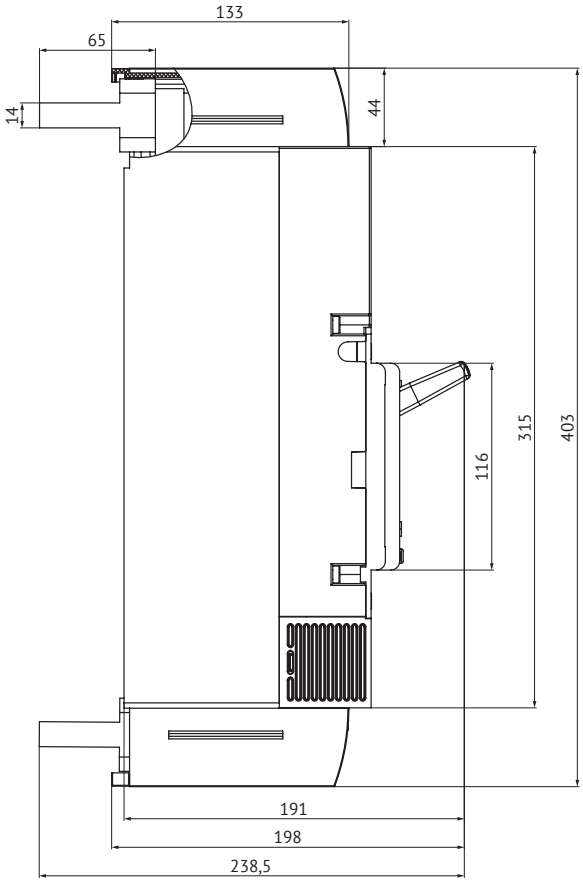

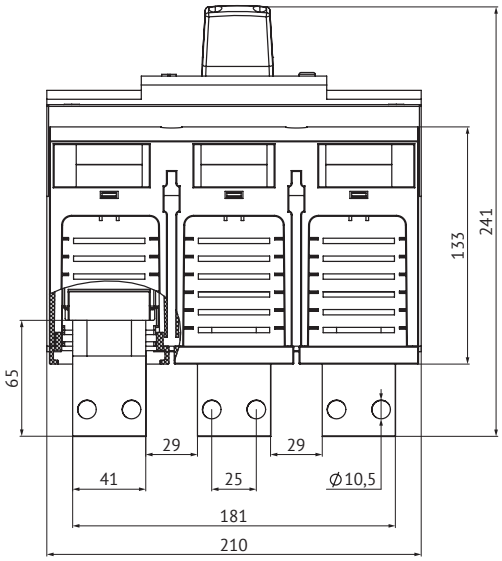

Motor drive

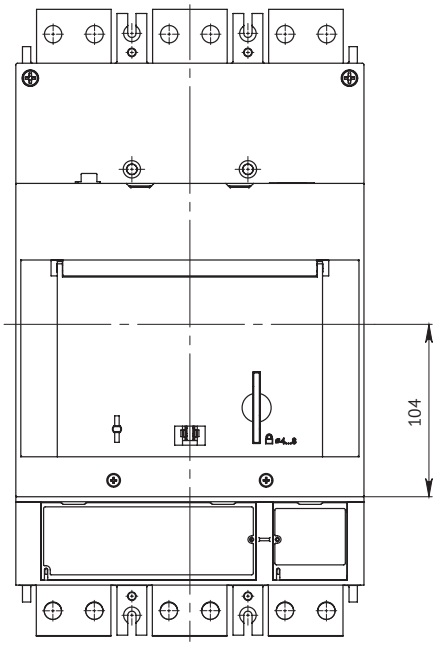

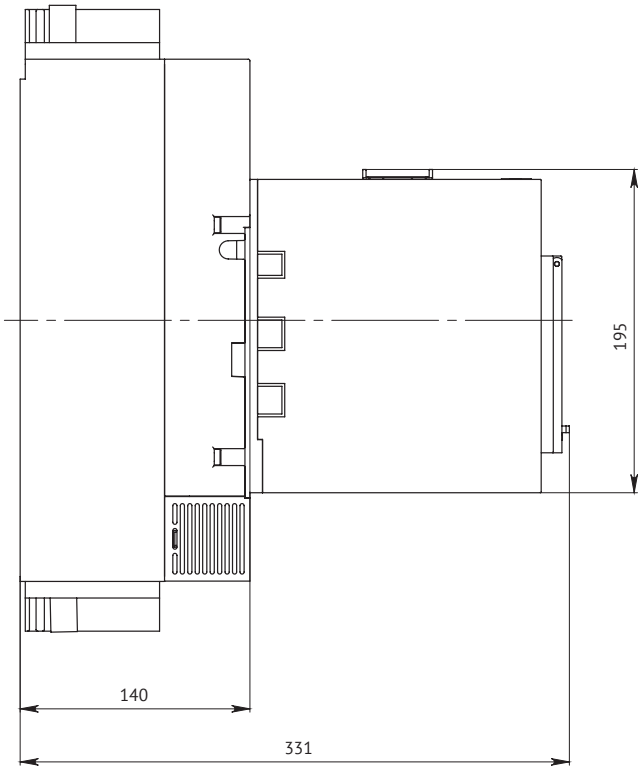

Withdrawable OptiMat D800, D1000, D1250 and D1600

Front terminals

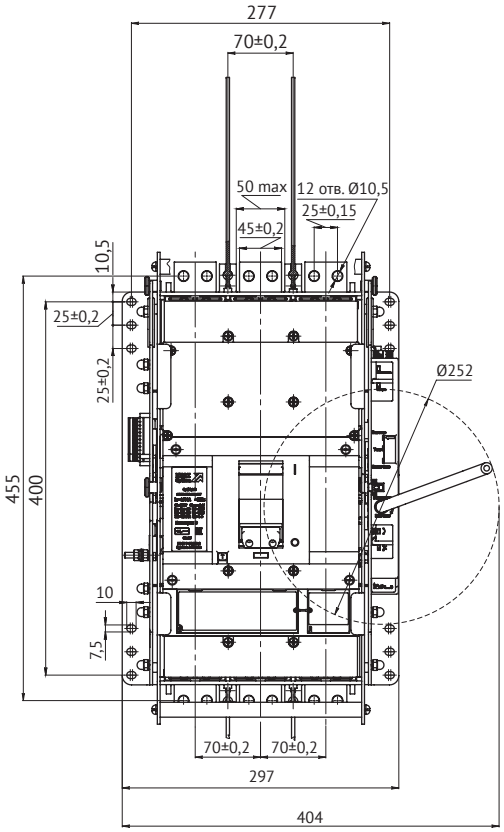

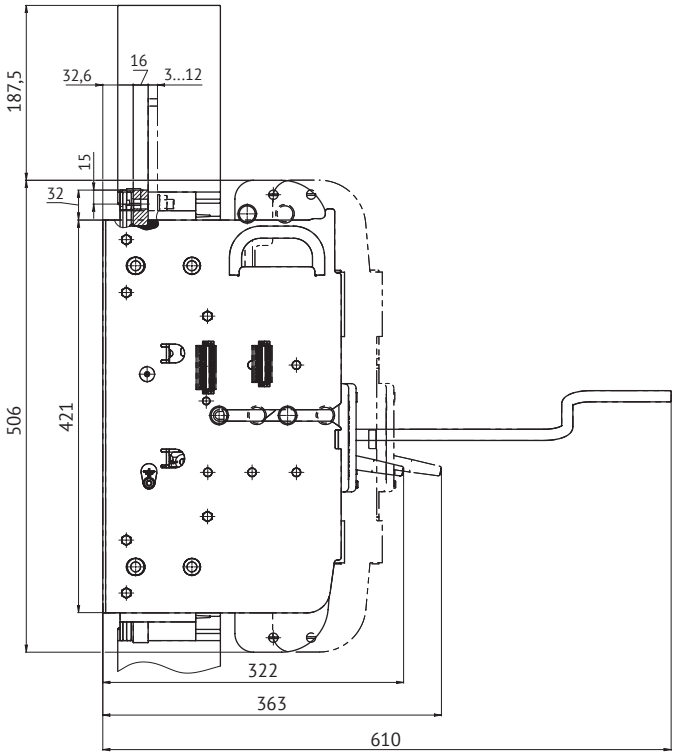

Terminal cover and terminals

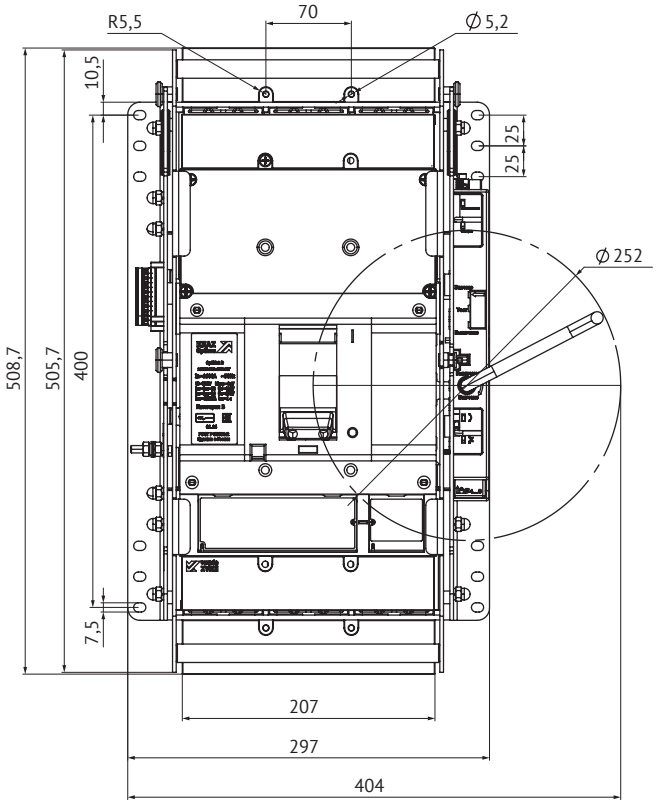

Rear vertical terminals and terminal covers

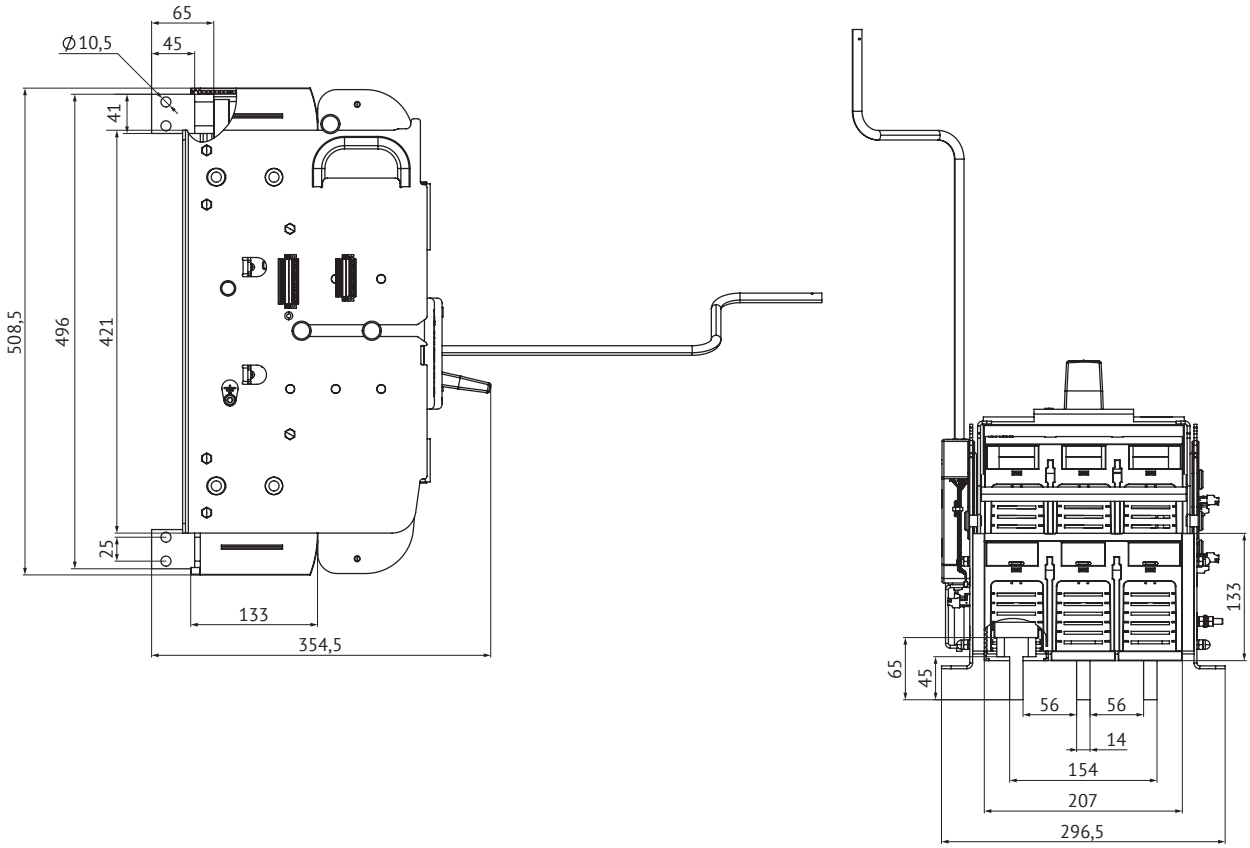

Rear horizontal terminals and terminal covers

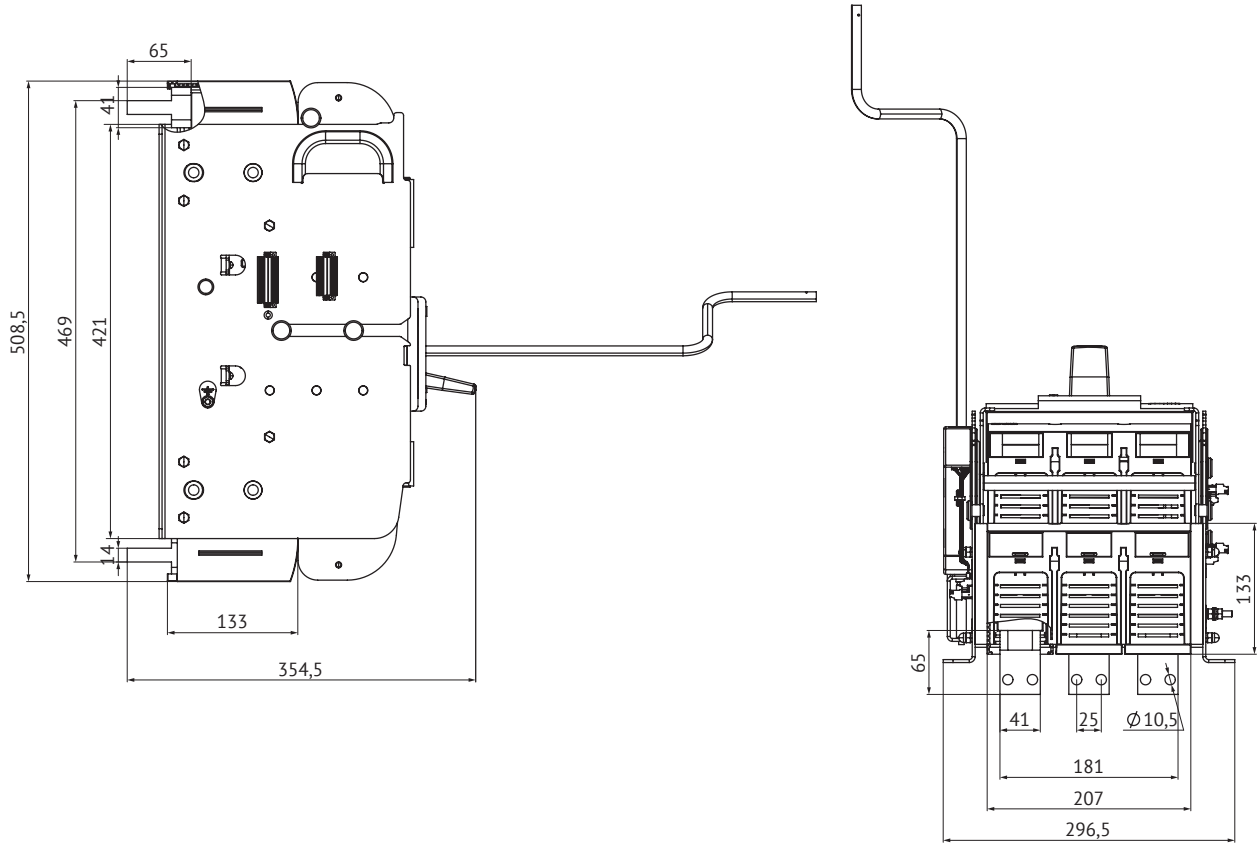

Pole expanders and extenders

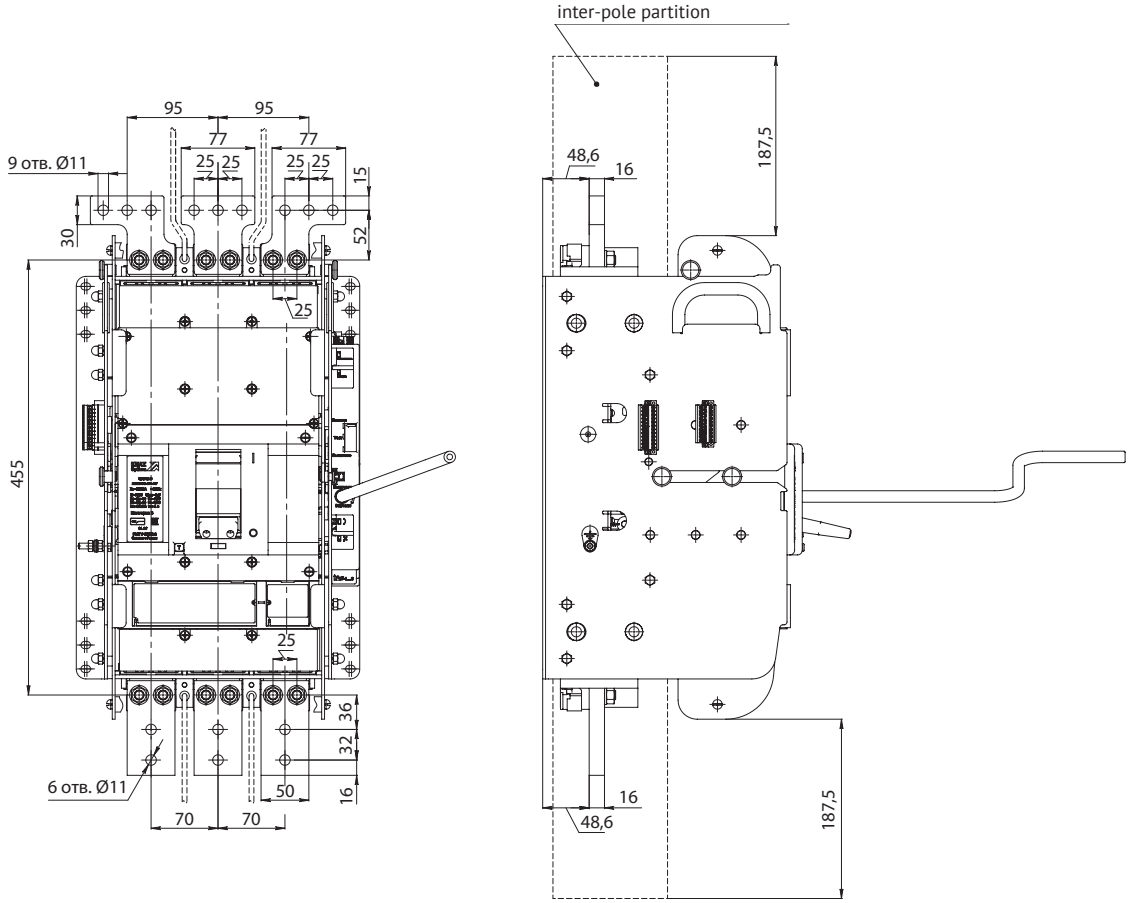

Motor drive

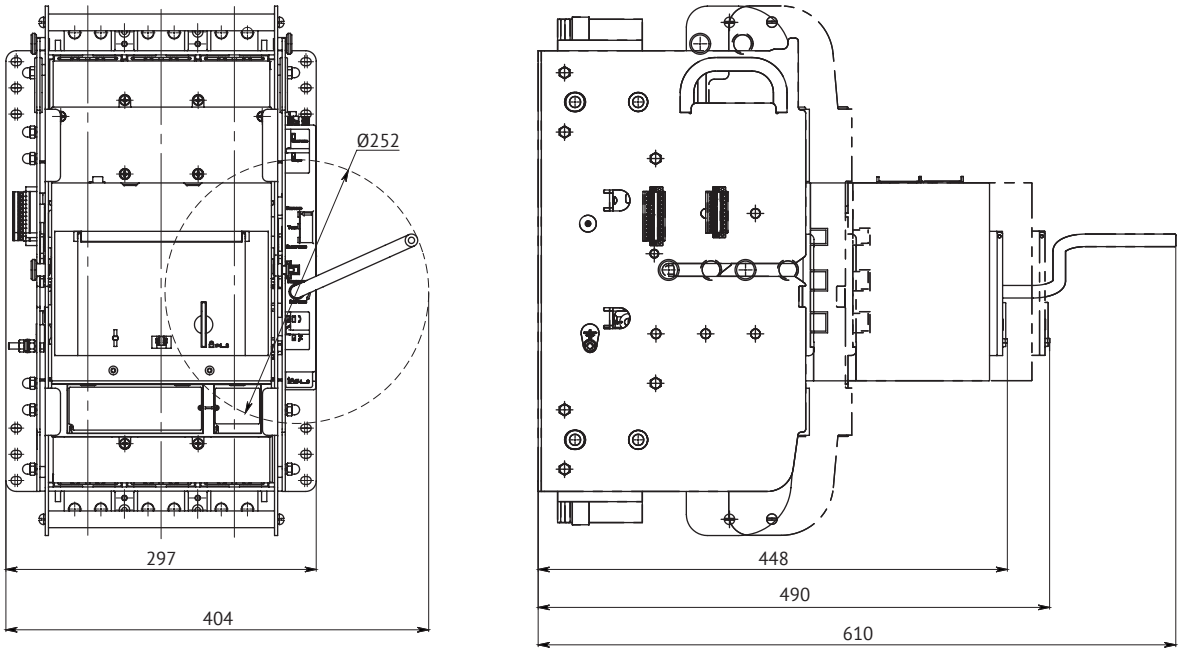

Templates for cabinet marking and drilling

OptiMat D100, D160 and D250

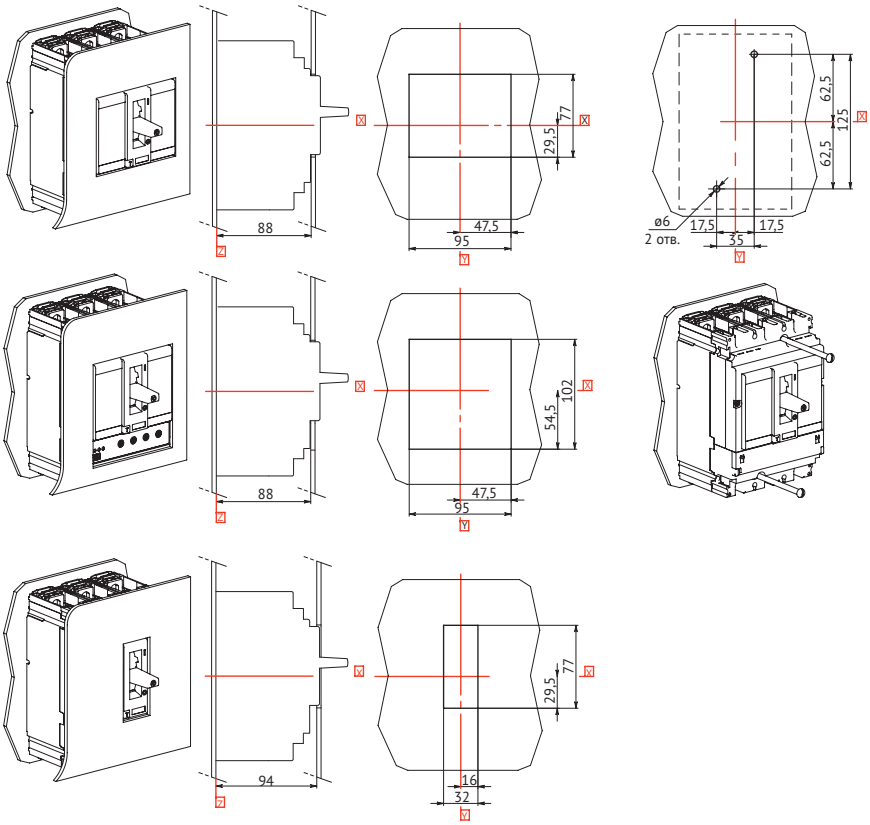

OptiMat D400 and D630

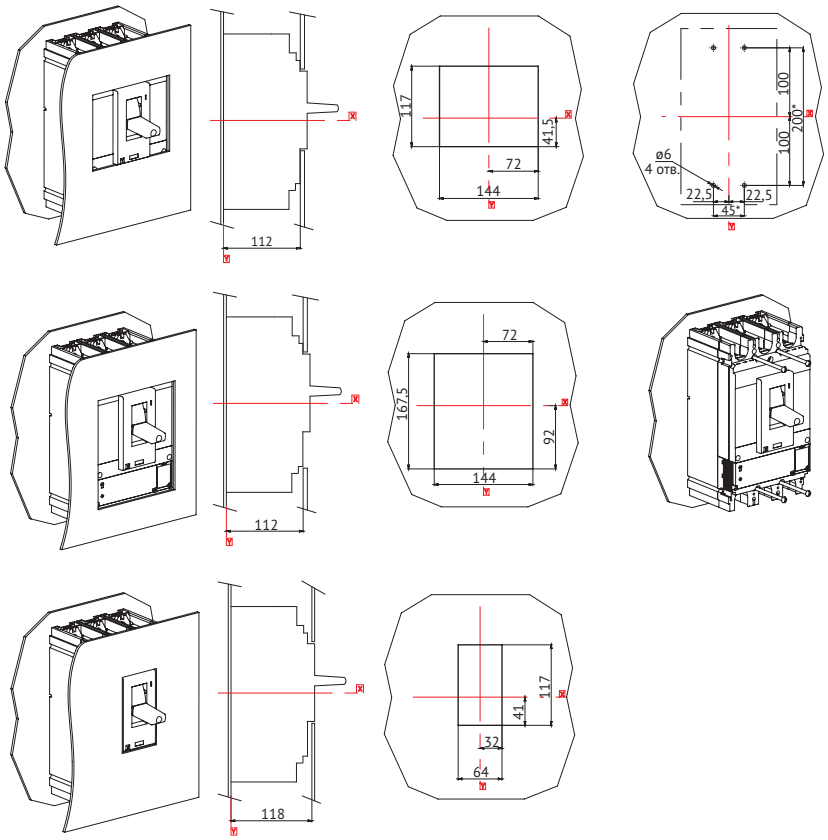

OptiMat D800, D1000, D1250 and D1600

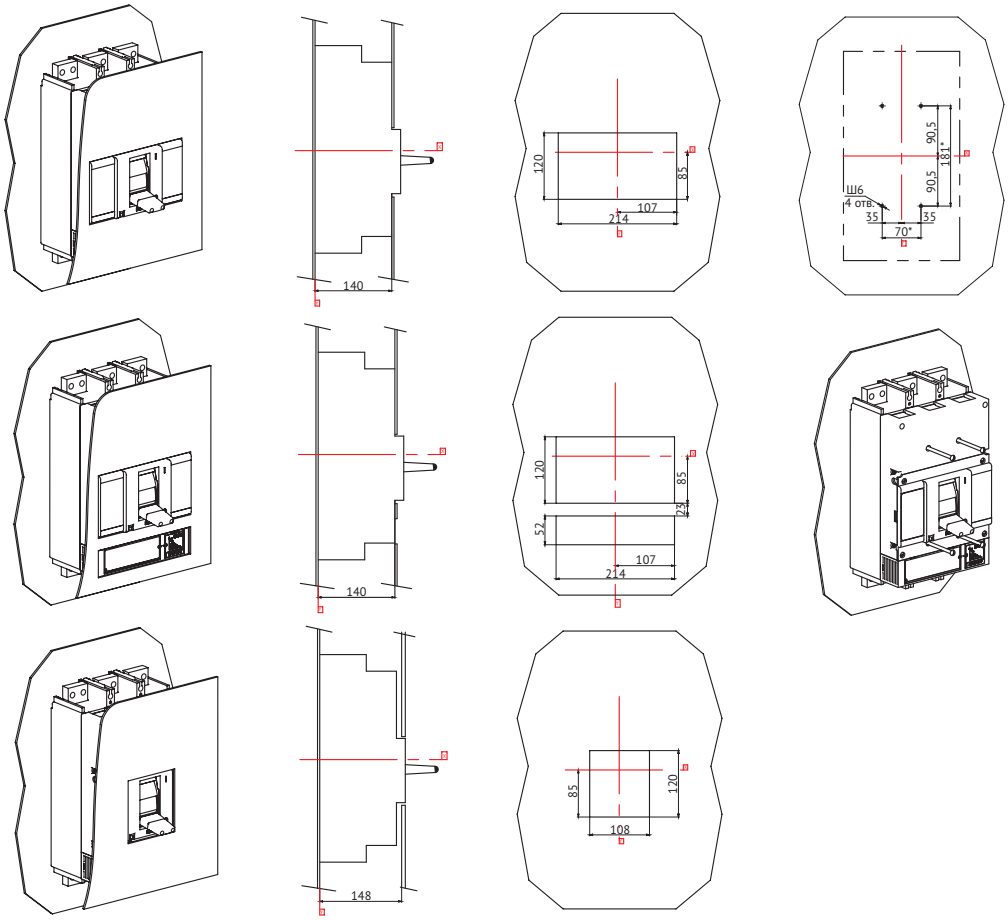

Plug-in connection and withdrawable design

OptiMat D100, D160 and D250

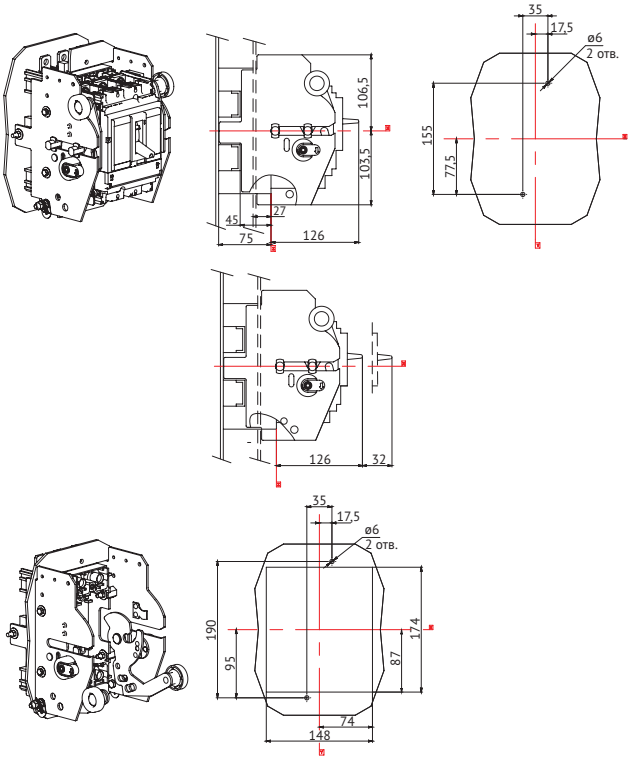

OptiMat D400 and D630

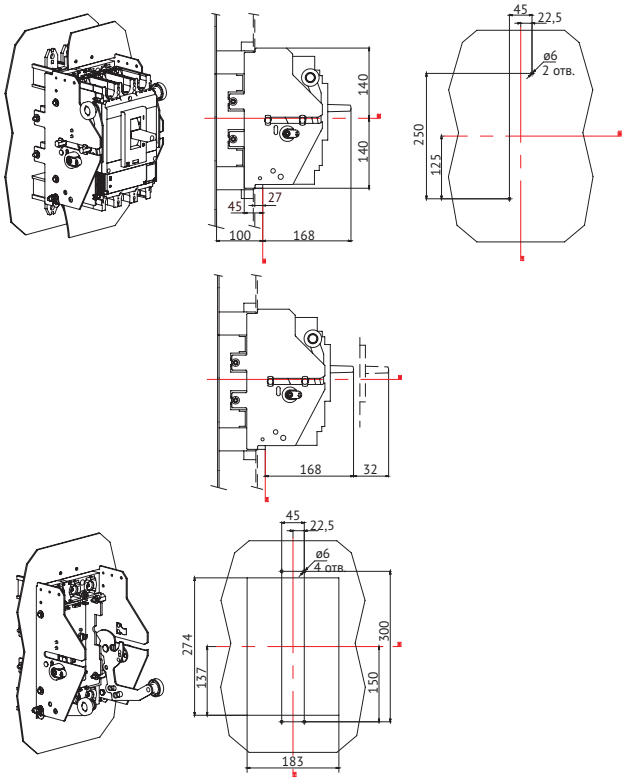

Location of holes in the panel for installing the base

OptiMat D100, D160 и D250

OptiMat D400 и D630

Location of holes on the panel for installing the base

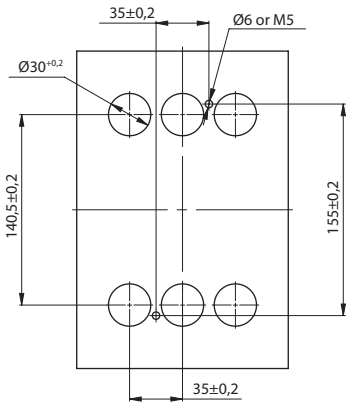

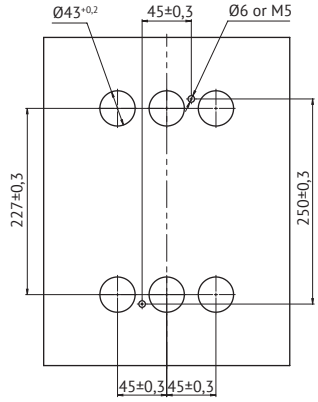

Location of holes for installing plug-in version behind the panel

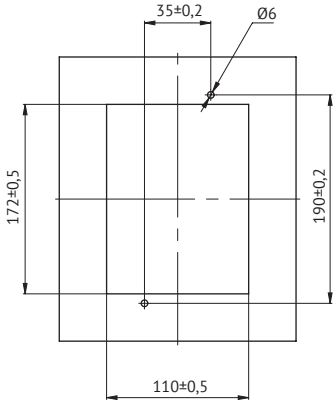

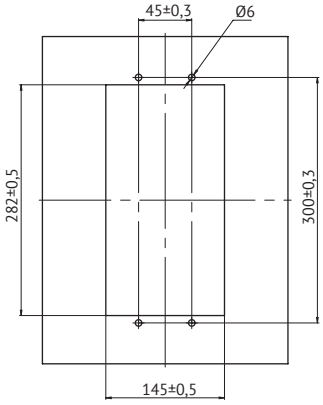

Location of holes for installing an withdrawable design behind the panel

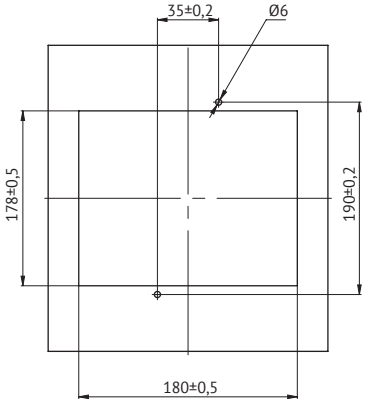

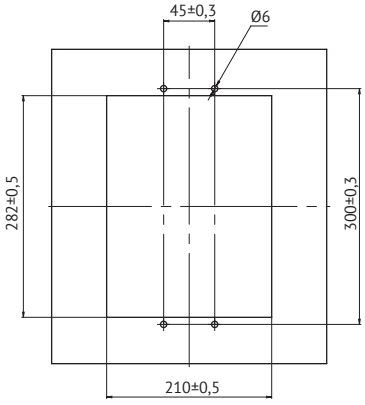

Location of holes on the rails for installing the base

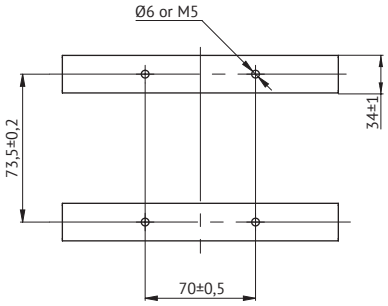

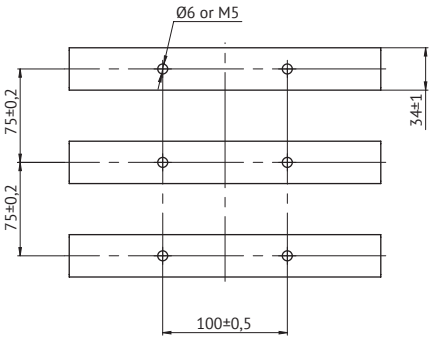

Circuit diagrams

OptiMat D with thermomagnetic release

The diagram shows the maximum possible number of auxiliary contacts and voltage releasers. The diagram is shown in the «Off» state of the circuit breaker, the device is «charged» and «Drawn in».

Designations adopted in the scheme:
TM - thermomagnetic current release;
HP - shunt trip;
MP - undervoltage release;
VK1, VK2, VK3, VK4 - signaling about the switching state of the main contacts (closed/open);
VK5, VK6 - early action contacts when switching on (rotary remote handle only);
VK7, VK8, VK9, VK10 - circuit breaker basket position alarming;
SK1 – contacts signaling the disconnection of the breaking mechanism both for operation mode and emergency shutdown;
SK2 - contact signaling the disconnection of the breaking mechanism (emergency shutdown only).

Dashed line indicates the connections made by the user.

Color coding of terminals

Numerical designation	Color coding	
	Designation	Wire color
101, 111	Bl	Blue
102, 112	W	White
121, 131, 141, 151	B	Black
122, 132, 142, 152	Y	Yellow
124, 134, 144, 154	R	Red

OptiMat D100, OptiMat D160 and OptiMat D250 with thermomagnetic release

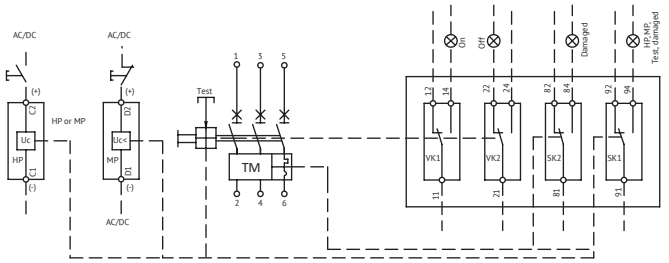

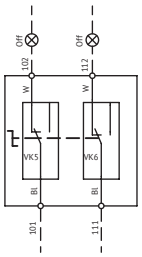

Early action contacts of the external locking lever

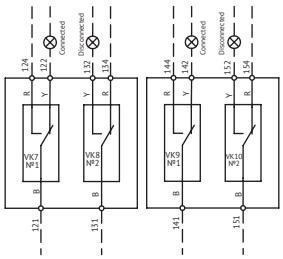

Circuit breaker basket position alarming

OptiMat D400, OptiMat D630 with thermomagnetic release

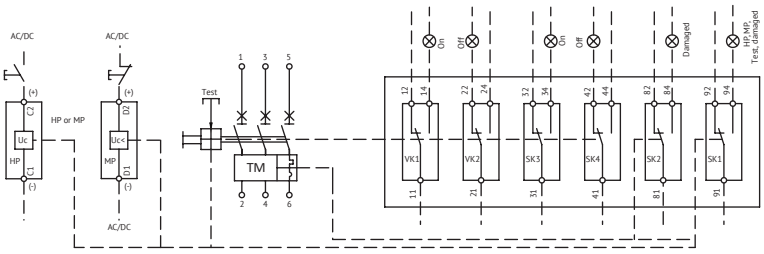

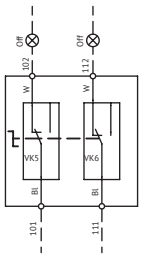

Early action contacts of the rotary remote handle

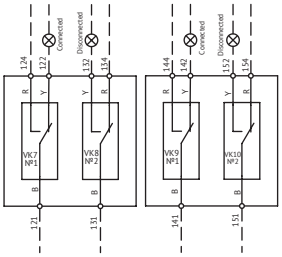

Circuit breaker basket position alarming

OptiMat D with electronic release

The diagram shows the maximum possible number of auxiliary contacts and voltage releasers. The diagram is shown in the «Off» state of the circuit breaker, the device is «Raised» and «Drawn in».

Обозначения, принятые в схеме:
MR — overcurrent release;
IR - actuating release;
MP — undervoltage release;
HP — shunt trip;
VK1, VK2, VK3, VK4 - signaling about the switching state of the main contacts (closed/open);
VK5, VK6 - early action contacts when switching on (rotary remote handle only);
VK7, VK8, VK9, VK10 - circuit breaker basket position alarming;
SK1 – contacts signaling the disconnection of the breaking mechanism both for operation mode and emergency shutdown;
SK2 - contact signaling the disconnection of the breaker (emergency shutdown only).

Цветовая маркировка выводов

Цифровое обозначение	Color coding	
	Designation	Wire color
101, 111	Bl	Blue
102, 112	W	White
121, 131, 141, 151	B	Black
122, 132, 142, 152	Y	Yellow
124, 134, 144, 154	R	Red

Dashed line indicates the connections made by the user.

OptiMat D100, OptiMat D160 and OptiMat D250 with electronic release

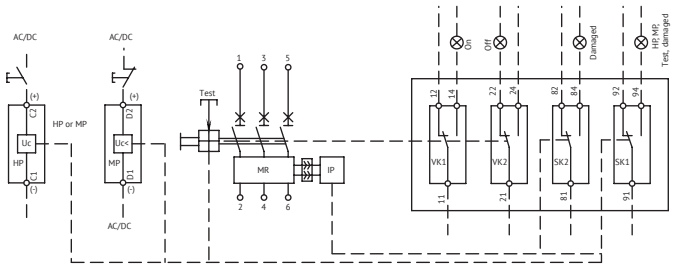

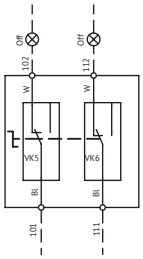

Early action contacts of the rotary remote handle

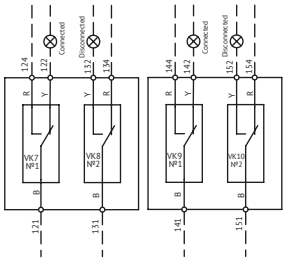

Circuit breaker basket position alarming

OptiMat D400, OptiMat D630 with electronic release

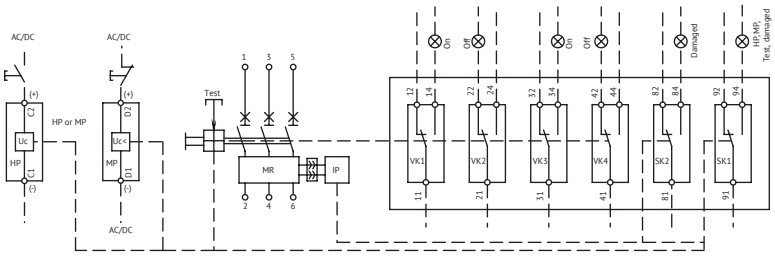

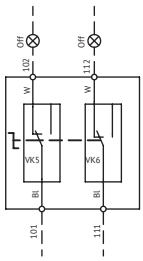

Early action contacts of the rotary remote handle

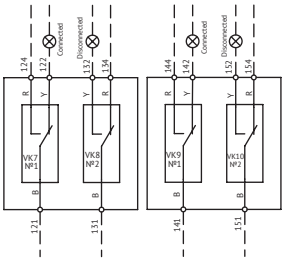

Circuit breaker basket position alarming

OptiMat D800, OptiMat D1000, OptiMat D1250 and OptiMat D1600 with electronic release

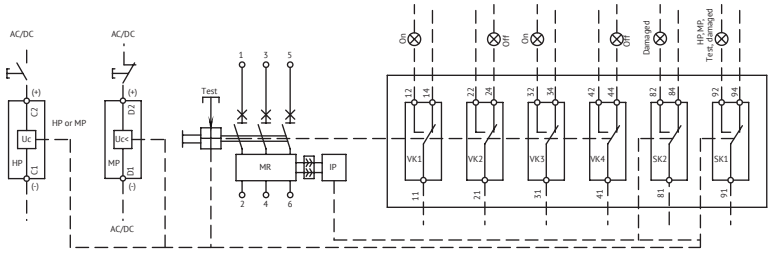

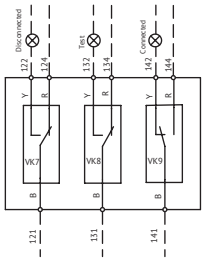

Circuit breaker basket position alarming

Motor drive connection diagrams

OptiMat D100, D250, D400 and D630

In the diagrams shown: the circuits are de-energized, the circuit breaker is switching off, drawn in and charged.

Connection diagram of the drive with automatic charge of activation spring

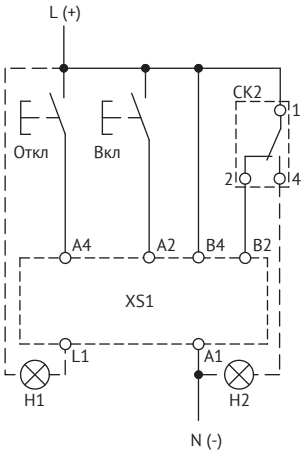

Connection diagram of the drive with remote charge of activation spring

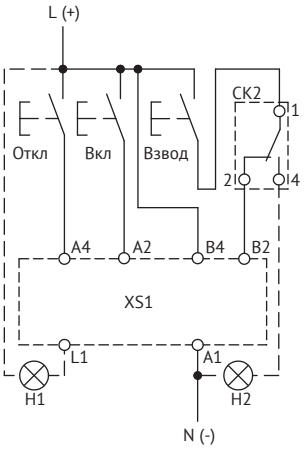

Drive connection diagram with remote charge of the actuating spring, including after emergency shutdown of the circuit breaker

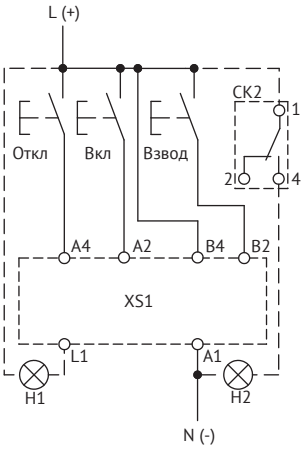

Connection diagram of the drive with remote charge of activation spring

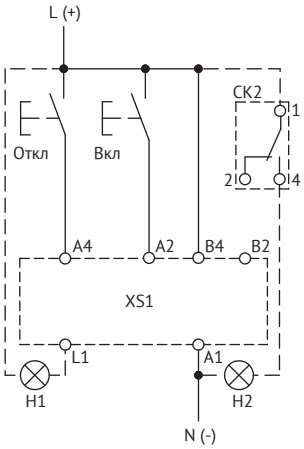

XS1 - connector for connecting conductors; A4 - shutdown command;
A2 - activation command;
B4, A1 - motor drive power supply;
B2 - command to charge the drive activation spring when the circuit breaker mechanism is disengaged (due to pressing the trip button, tripping of the undervoltage release or shunt trip, impact of the locking mechanism);
L1 - manual mode;

SK2—signal contact for emergency shutdown due to tripping of the overcurrent release (short circuit, overload);
H1 — signaling of manual control mode;
N2 - signaling of tripping of the signal contact of the circuit breaker after an emergency shutdown of SK2.

OptiMat D800, D1000, D1250 and 1600

In the diagrams shown: the circuits are de-energized, the circuit breaker is switching off, drawn in and charged.

Connection diagram of the drive with remote charge of activation spring

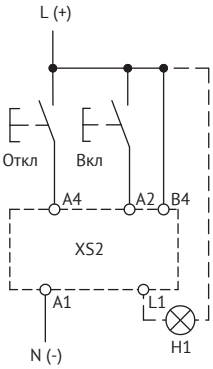

Connection diagram for a drive with manual charge of the actuating spring after an emergency shutdown

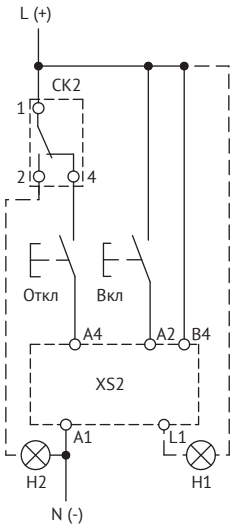

XS2 - connector for connecting conductors; A4 - shutdown command;
A2 - activation command;
B4, A1 - motor drive power supply;
L1 - automatic mode;
SK2 - alarm contact for emergency deactivation (short circuit, overload);
H1 - manual control mode alarm;
N2 - signaling of tripping of the signal contact of the circuit breaker after an emergency shutdown of SK2.

Minimum allowable distance from circuit breakers to metal parts of OptiMat D switchgear

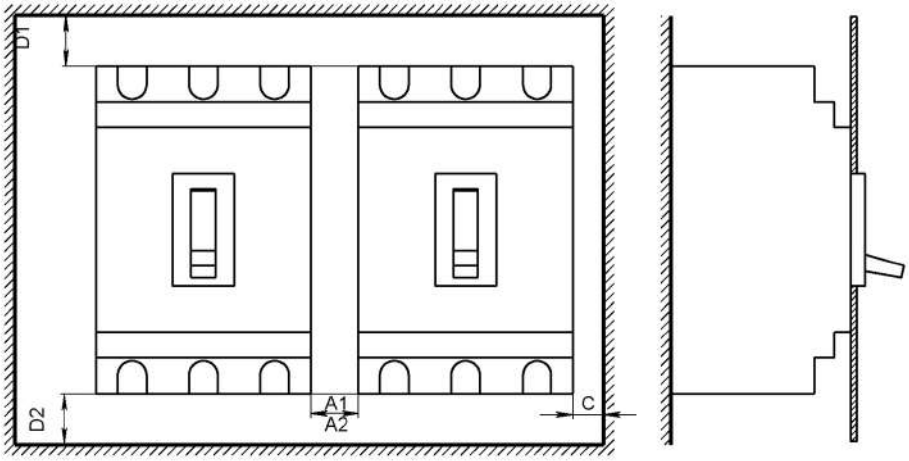

OptiMat D circuit breaker		Dimensions, mm				
		C	D1	D2	A1[1]	A2[2]
100, 160 and 250 A	400 V	5	35	35	0	10
	690 V	20	35	35	0	40
400, 630 A	400 V	5	60	60	0	10
	690 V	20	100	100	0	40
800, 1000, 1250, 1600 A	400–690 V	15	100	35	0	15

1 — if there are terminal covers;
2 — if there are no terminal covers.

OptiMat A Air circuit breakers for currents from 630 to 6300 A

Air circuit breakers of OptiMat A series are designed to conduct current in the normal mode, ensure protection and infrequent operation of electric circuits with rated current from 630 to 6300 A. Owing to their design they can easily withstand high capacities. The devices are equipped with multiple types of protection to meet the requirements of protection coordination and selectivity in the network to be protected.

Different lock-in equipment is designed to prevent unskilled actions and protect operational and attending personnel.

Selection guide

			OptiMat A-S1	OptiMat A-S5, S6	OptiMat A-S2, S4	OptiMat A-S6
Appearance						
Standards			ГОСТ 50030.2			
Number of poles			3		3,4	
Electric specifications						
Rated current In, A			630, 800, 1000, 1250, 1600	5000, 6300	630, 800, 1000, 1250, 1600, 2000, 2500, 3200, 4000	5000, 6300
Rated frequency, Hz			50		50 / 60	
Application category			B			
Current type			AC			
Rated operating voltage Ue, V			690 / 400	400	690/400	
Auxiliary (free) contacts			6c	6a+6b		
Manual	Control buttons		Yes			
Electrical	Motor drive		Yes		Yes/No	
Limiting switching capacity of alternating current Icu (kA)			50 (400 V) 25 (690 V)	120 (400 V)	65/85 (400 V) 50/65 (690 V)	100 (400 V) 85 (690 V)	150(400 V) 100 (690 V)
Release type			Electronic		Without releases/Electronic	
Release version			MR5.0		MR7.0 / MR8.0 / MR8.1	
Mounting characteristics						
Fixed design	Rear connection	vertical type of terminal	Yes	No	Yes	
Fixed design	Rear connection	horizontal type of terminal	Yes			No / Yes
Fixed design	Front connection		No		Yes	No
Fixed design	Combined		No		Yes	No
Withdrawable design	Rear connection	vertical type of terminal	Yes	No	Yes	
Withdrawable design	Rear connection	horizontal type of terminal	Yes		No / Yes	No / Yes
Withdrawable design	Front connection		No		Yes	No
Withdrawable design	Combined		No			
Operating characteristics						
IP rating (IP)			IP20			
Climatic and placement category			U3			
Utilization category in terms of selectivity			Selective		Nonselective / Selective	
Additional features						
Circuit breaker basket position indication			No		Yes / No	
Undervoltage release [1]			No		Yes / No	
Second shunt trip [1]			No		Yes / No	
Contact of the circuit breaker main contacts closure readiness signaling [2]			No		Yes / No	
Internal installation lock			No		Yes / No	
Locking the ON/OFF buttons with a padlock			No		Yes / No	
Protective shutters			Yes			
Inter-pole partitions			Yes			
Front panel frame			Yes			

[1] They are mutually exclusive in circuit breakers of sizes S2, S4 (installed into the same cubicle);
[2] It is mutually exclusive in circuit breakers of sizes S2, S4 with undervoltage release or the second shunt trip in the circuit breaker versions with MR8.0 and MR8.1 (to be connected to the terminal block into the same connectors U1 and U2).

Designation

Air circuit breaker

a b c d

OptiMat A-630-S2-3P-85-D-MR8.0-B-C2200-M2-P01-S1-03

1 2 3 4 5 6 7 8 9 10 11 12 13 14

1	Series	OptiMat				
2	Configuration	A — air circuit breakers				
3	Rated current In, A	630; 800; 1000; 1250; 1600; 2000; 2500; 3200; 4000; 5000; 6300				
4	Standard size	S1 — First overall dimension (width up to 280 mm, In from 630 to 1600 A)	S2 — Second overall dimension (width up to 370 mm, In from 630 to 2000 A)	S4 — Fourth overall dimension (width up to 430 mm, In from 2500 to 4000 A)	S5 — Fifth overall dimension (width up to 820 mm, In 5000 A)	S6 — Sixth overall dimension (width up to 950 mm, In 6300 A)
5	Number of circuit breaker poles	3P — Triple-pole		4P — Four-pole		
6	Limiting breaking capacity, kA at Ur = 400 V	50; 65; 85; 100; 120; 150				
7	Design according to installation method	F — Fixed version [1]		D — Withdrawable design. Fixed part included		
8	Type of microprocessor trip unit	MR0 — Microprocessor trip unit is not available	MR5.0 — LSIG protections, current measurement (for S1, S5, S6)	MR7.0 — LSIG protections (for S2, S4)	MR8.0 — LSIG protections. With communications function via Modbus and current measurement (for S2, S4)	MR8.1 — LSIG protection. Bl communications function via Modbus and current measurement. Menu in Russian (for S2, S4)
9	Connection options	B — Rear connection (horizontal or vertical) [2]	F — Front connection (for S2, S4 for currents from 630 to 2500 A)	C — Combined connection (upper — front, lower — rear), for S2, S4 for currents from 630 to 2500 A		
10	Type of control coils	Cabcd — control coils unit designation				
		a — Closing coil: 0 — not installed; 1 — installed 110 V AC/DC; 2 — installed 230 V AC/ 220 V DC 3 — installed 24 V DC	b — Shunt trip: 0 — not installed; 1 — installed 110 V AC/DC; 2 — installed 230 V AC/ 220 V DC; 3 — installed 24 V DC	c — Second shunt trip: 0 — not installed; 1 — installed 110 V AC/DC; 2 — installed 230 V AC/ 220 V DC; 3 — installed 24 V DC	d — Undervoltage release: 0 — not installed; 2 — installed 230 V AC/220 V DC	
11	Type of motor drive	M0 — Motor drive is not available	M1 — Motor drive 110 V AC/DC	M2 — Motor drive 230 V AC/220 V DC		
12	Type of protection systems	P00 — protection systems are not available P01 — isolating shutters are installed P02 — built-in power button lock is installed P03 — isolating shutters and built-in power button lock are installed P04 — locking the ON/OFF buttons with a padlock P05 — insulating shutters and blocking of the on/off buttons with a padlock are installed P06 — insulating shutters installed, on/off buttons locked with a padlock, built-in lock for power buttons				
13	Type of auxiliary signal contacts	S1 — Signal contacts 6a+6b		S2 — Signal contacts 6c		
14	Type of additional signal systems	03 — Mechanical cycle counter is installed; 06 — Contact of the circuit breaker main contacts closure readiness signaling and mechanical cycle counter are installed.				

[1] Fixed version available in all sizes except S5 (120 kA), S6 (120 kA).
[2] For 2000 A withdrawable circuit breakers, only rear vertical, front and combined connections are available. For 4000 A fixed and withdrawable circuit breakers, only rear vertical, front and combined connections are available. For 5000 and 6300 A circuit breakers (120 kA) , only rear horizontal busbar connection is available.

Moving part

OptiMat A-630-S2-3P-65-MP-MR8.1-C2200-M2-P04-S1-06

1 2 3 4 5 6 7 8 9 10 11 12 13

1	Series	OptiMat				
2	Configuration	A — air circuit breakers				
3	Rated current In, A	630; 800; 1000; 1250; 1600; 2000; 2500; 3200; 4000				
4	Standard size	S2 — Second overall dimension (width up to 370 mm, In from 630 to 2000 A)	S4 — Fourth overall dimension (width up to 430 mm, In from 2500 to 4000 A)			
5	Number of circuit breaker poles	3P — Triple-pole	4P — Four-pole			
6	Limiting breaking capacity, kA at Ur = 400 V	50; 65; 85; 100				
7	Design according to installation method	MP — Moving part. The fixed part must be ordered separately. MPH — Moving part with an increased distance between the terminals of one pole by 25mm. The fixed part must be ordered separately.				
8	Type of microprocessor trip unit	MR0 — Microprocessor trip unit is not available	MR5.0 — LSIG protections, current measurement (for S1, S5, S6)	MR7.0 — LSIG protections (for S2, S4)	MR8.0 — LSIG protections. With communications function via Modbus and current measurement (for S2, S4)	MR8.1 — LSIG protection. Bl communications function via Modbus and current measurement. Menu in Russian (for S2, S4)
9	Type of control coils	**Cabcd — обозначение блока катушек управления**				
		a — Closing coil: 0 — not installed; 1 — installed 110 V AC/DC; 2 — installed 230 V AC/ 220 V DC; 3 — installed 24 V DC	**b — Shunt trip:** 0 — not installed; 1 — installed 110 V AC/DC; 2 — installed 230 V AC/ 220 V DC; 3 — installed 24 V DC	**c — Second shunt trip:** 0 — not installed; 1 — installed 110 V AC/DC; 2 — installed 230 V AC/ 220 V DC; 3 — installed 24 V DC	**d — Undervoltage release:** 0 — not installed; 2 — installed 230 V AC/220 V DC	
10	Type of motor drive	M0 — Motor drive is not available	M1 — Motor drive 110 V AC/DC	M2 — Motor drive 230 V AC/220 V DC		
11	Type of protection systems	P00 — protection systems are not available	P02 — built-in power button lock is installed	P04 — blocking of the on/off buttons with a padlock is installed		
12	Type of auxiliary signal contacts	S1 — Signal contacts 6a+6b				
13	Type of additional signal systems	03 — Mechanical cycle counter is installed; 06 — Contact of the circuit breaker main contacts closure readiness signaling and mechanical cycle counter are installed.				

Fixed part

OptiMat A FP - S2 - 630-1600 - 3P - B - P01

1 2 3 4 5 6 7

1	Series	OptiMat	
2	Configuration	A FP — Fixed part of the circuit breaker	
3	Standard size	S2 — Second overall dimension (width up to 370 mm, In from 630 to 2000 A)	S4 — Fourth overall dimension (width up to 430 mm, In from 2500 to 4000 A)
4	Rated current In, A	630; 800; 1000; 1250; 1600; 2000; 2500; 3200; 4000	
5	Number of poles	3P — Triple-pole	4P — Four-pole
6	Connection options	B — Rear connection (horizontal or vertical) BH — Rear connection (horizontal or vertical) with an increased distance between the terminals of one pole by 25 mm F — Front connection FH — Front connection with an increased distance between the terminals of one pole by 25 mm C — Combined connection (upper - front, lower - rear) CH — Combined connection with an increased distance between the terminals of one pole by 25 mm (upper - front, lower - rear)	
7	Type of protection systems	P01 — isolating shutters are installed	

Series advantages

Twelve NO/NC (6a+6b) for sizes S2, S4, S5, S6, and six switching (6c) galvanically isolated contacts for size S1 allow for the implementation of a large number of signaling circuits.

Elements are made of pure electrical copper, which allow to reach high efficiency, as well as long-life operation.

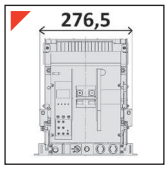

The compact dimensions of the circuit breakers of size S1 make it possible to complete standard circuit switchboards with a large number of equipment, or to use smaller circuit switchboards.

Using special silver-based alloys to create the contact group made it possible to achieve high wear resistance and provide over ten thousand electrical switching cycles.

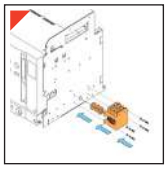

Modular design provides easy and quick installation.

Tester for microprocessor trip units of circuit breakers of the OptiMat A series is designed for testing microprocessor trip units of the MR7.0, MR8.0, MR8.1 series.

The terminal block with screw terminals in sizes S1, S5, S6 allows for quick installation of control circuits, without the use of additional crimps and solder joints.

Availability of different locks (lock of circuit breaker position in basket, lock of closure, isolating shutter etc.) allows to provide attending personnel safety.

The possibility of changing the position of the terminals from horizontal to vertical in the sizes S1, S2, S4, S6 allows the circuit breakers to be used in circuits with both vertical and horizontal current-carrying busbars.

Support of data transmission via Modbus RTU in MR8.0 and MR8.1 releases allows to use dispatch system.

5 years warranty. Each unit undergoes multistage quality control from assembling to the finished goods warehouse.

The OptiMat A air circuit breaker can be purchased either assembled or supplied separately (fixed and moving parts of OptiMat A must be ordered as separate items).

Technical specification

Circuit breaker series			OptiMat A-S1					OptiMat A-S5, S6	OptiMat A-S6	OptiMat A-S2						OptiMat A-S4			OptiMat A-S6	
Main characteristics																				
Rated operating voltage Ue, V			690																	
Rated insulation voltage Ui, V			690					400		1000										
Rated impulse withstand voltage Uimp, kV			8					12												
Application category			B																	
Suitability for disconnection			yes																	
Number of poles			3							3,4										
Control																				
Manual	Control buttons		+																	
Electrical	Motor drive		+																	
			+																	
Design option			630	800	1000	1250	1600	5000	6300	630	800	1000	1250	1600	2000	2500	3200	4000	5000	6300
Fixed	Rear mounting	vertical	+	+	+	+	+	-	-	+	+	+	+	+	+	+	+	+	+	+
		horizontal	+	+	+	+	+	-	-	+	+	+	+	+	-	+	+	-	+	+
	Front mounting		-	-	-	-	-	-	-	+	+	+	+	+	+	+	+	-	-	-
	Combined		-	-	-	-	-	-	-	+	+	+	+	+	+	+	-	-	-	-
Withdrawable	Rear mounting	vertical	+	+	+	+	+	-	-	+	+	+	+	+	+	+	+	+	+	+
		horizontal	+	+	+	+	+	+	+	+	+	+	+	+	-	+	+	-	+	+
	Front mounting		-	-	-	-	-	-	-	+	+	+	+	+	+	+	-	-	-	-
	Combined		-	-	-	-	-	-	-	+	+	+	+	+	+	+	-	-	-	-
Rated and limiting parameters of the main circuit of circuit breakers																				
Rated current In, A			630	800	1000	1250	1600	5000	6300	630	800	1000	1250	1600	2000	2500	3200	4000	5000	6300
Rated frequency, Hz			50							50 / 60										
Rated limiting breaking capacity (Icu), кA		Ue 400 V	50					120		65/85					85	100			150	
		Ue 690 V	25					-		50/65					65	85			100	
Rated service capacity (Ics), kA		Ue 400 V	40					100		65/85					85	100				
		Ue 690 V	20					-		50/65					65	85			-	
Short-time withstand current (Icw) for 1 sec, kA		Ue 400 V	40					100		65						85				
		Ue 690 V	20					-		50						85				
Rated short-circuit making capacity		Ue 400 V	-					-		143/187					187	220			330	
		Ue 690 V	-					-		105/143					143	220				
General wear resistance, cycles	with maintenance		-					-		50000										
	without maintenance		15000					5000		30000										
Electrical wear resistance, cycles	with maintenance		-					-		20000										
	without maintenance		5000					500		10000										
Trip time	Break time, ms		50±10							15										
	Make time, ms		50±10							40										
Protection, indication and measurement devices																				
Microprocessor trip unit			MR5.0					MR5.0		MR7.0 / MR8.0 / MR8.1										
Overload protection			+					+		+/+/+										
Short-circuit protection	with time delay		+					+		+/+/+										
	instantaneous		+					+		+/+/+										
Ground fault protection			+					+		+/+/+										
Indication of modified current			+					+		-/+/+										
Indication of unit condition			-					-		+/+/+										
Supplementary devices (control and signaling) [1]																				
Auxiliary contacts			6c					6a+6b		6a+6b										
Voltage releases	shunt trip		230 V AC / 220 V DC							230 V AC/220 V DC ; 110 V AC/DC ; 24 V DC										
	closing coil		230 V AC / 220 V DC							230 V AC/220 V DC ; 110 V AC/DC ; 24 V DC										
	second shunt trip [2]		-							230 V AC/220 V DC ; 110 V AC/DC ; 24 V DC										
	undervoltage release [2]		-							230 V AC/220 V DC										
Circuit breaker basket position indication			-							To be delivered as a separate item										
Contact of the circuit breaker main contacts closure readiness signaling			-							-/+										
Auxiliary devices [1] **(locking, protection, indication)**																				
Protective shutters			+																	
Inter-pole partitions			+																	
Mechanical cycle counter			+																	
Mechanical interlock [3]			-							-/+										
Internal installation lock			-							-/+										
Overall dimensions and weight																				
Overall dimensions W×H×D, mm	fixed with rear connection	3P	254x319x258					-		361x310x335						421x311x335		421x333x391	792x372x363	
	extended with rear connection	3P	277x351x273					815x429x501	930x429x501	353x432x435						413x434x435		413x432x492	784x4473x463	
Weight, kg	fixed with rear connection	3P	33					-	-	41	41	41	43	43	45	48	59	65	116	
	extended with rear connection	3P	53					240	260	65	65	65	68	68	70	75	90	98	210	235

[1] for detailed description of accessories, see p. 213
[2] are mutually exclusive positions in size versions S2, S4, S6 (150 kA)
[3] mechanical interlock is installed only on withdrawable circuit breakers

Different options of the main terminals delivery and installation

Rear horizontal connection of S1 busbars

Front attachment of S2 busbars

Back vertical attachment of S1 busbars

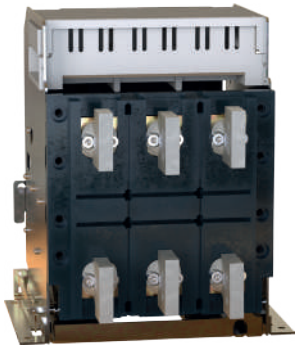

Back vertical attachment of S4 busbars

Back horizontal attachment of S4 busbars

Rear horizontal connection of S5 buses (120 kA)

Rear combined connection of S4 busbars [1)]

Rear horizontal connection of S6 buses (120 kA)

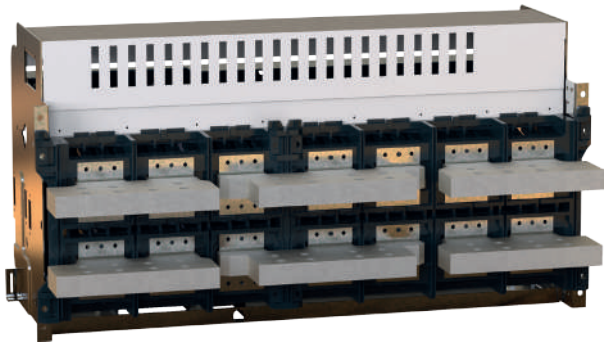

Note: See technical data sheet for detailed options of connection types delivery.
[1)] For circuit breakers S1, S2, S4, the rear terminals are oriented, i.e. can be installed horizontally or vertically by the customer (for those ratings where possible).

Microprocessor trip unit

Types of microprocessor trip units				
	MR5.0	MR7.0	MR8.0	MR8.1
Appearance	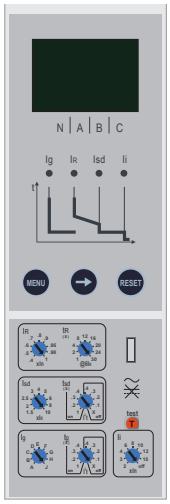			
Current protection	1) From overcurrent 2) From short circuit with time delay 3) From short circuit, instantaneous 4) From earth fault	1) From overcurrent 2) From short circuit with time delay 3) From short circuit, instantaneous 4) From earth fault		
Measurement	current	not available	current	
Power supply	Power supply from current transducers* installed in protected network (at least 30% of the rated current) External power supply: - 230 V AC	Power supply from current transducers* installed in protected network (at least 30% of the rated current) External power supply: - AC/DC 110/220 V - DC 48 V	Power supply from current transducers* installed in protected network (at least MR8.0 — 30%, MR8.1 — 50% of the rated current) An external power supply is required for data exchange: - AC/DC 110/220 V - DC 48 V	
LED triggering indicators	Alarm indication of the function of earth short circuit protection/ alarm indication of the function of overload protection/ alarm indication of the function of short circuit protection with short-time delay tripping/ alarm indication of the function of short circuit protection.	Warning of overcurrent	Indication of overcurrent/Indication of overcurrent and short circuit tripping/indication by tripping without time delay/indication of currents in phases	
Control buttons	Reset, menu, right	Reset	Reset, menu, right, enter, self-testing	Enter, reset, left, right, return, self-testing
Record of protection tripping	1 last tripping (current, time)	Not available	10 latest entries (cause, current, phase, time)	300 latest entries (cause, current, phase, time)
Data transfer protocol	Not available	Not available	Modbus / RS-485	

* Power supply from current transducers is backup power supply system. With an unstable current load below the level of the autonomous power supply current of the microprocessor trip unit or when switching on to a short circuit, the response time of the circuit breaker may be delayed, therefore it is recommended to power the microprocessor trip unit from an external source (terminals 1 and 2).

An external power supply is required to use the Modbus communication function.

For the microprocessor trip unit MR8.1, power supply to terminals 1 and 2 is required.

Type MR5.0

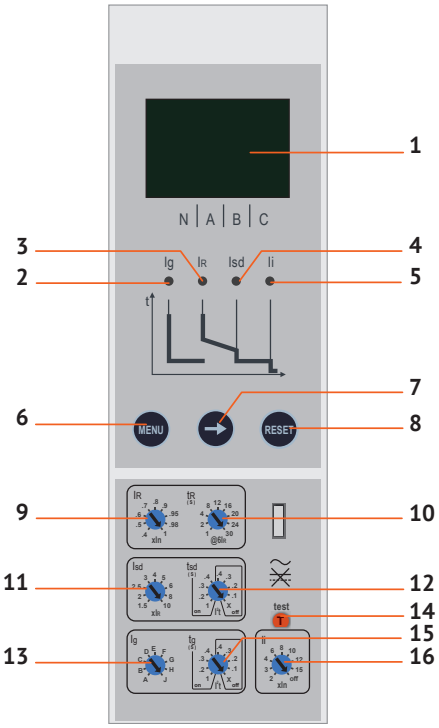

All necessary protection types

OVERCURRENT PROTECTION:
• with long-time delay.

SHORT-CIRCUIT PROTECTION:
• with independent time delay, instantaneous;
• type of protection function curve I^2t on/off (for short-time protection).

GROUND FAULT PROTECTION:
• type of protection function curve I^2t on/off.

1 LCD display;
2 Ig alarm indicator of ground fault protection functions;
3 IR alarm indicator of overcurrent protection functions;
4 Isd alarm indicator for short-circuit protection functions with a short-time delay;
5 Ii alarm indicator of short-circuit protection functions;
6 «MENU» button for accessing various submenus;
7 «→» button for menu navigation;
8 «RESET» button for parameter setting;
9 «IR» setting of current setpoint value for overcurrent protection;
10 «tR» setting of overcurrent protection delay;
11 «Isd» setting of current setpoint value for short circuit protection;
12 «tsd» setting of short-time delay;
13 «Ig» setting of ground fault current setpoint value;
14 «test» testing of instantaneous short-circuit protection;
15 «tg» setting of ground fault protection tripping delay;
16 «Ii» setting of current setpoint value for instantaneous short circuit protection.

MR5.0 LCD display

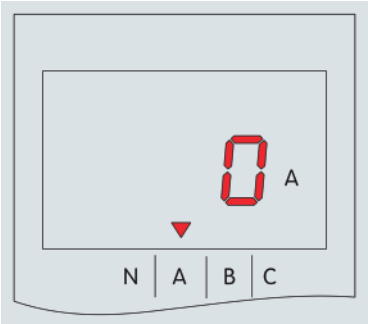

To go to the query state with parameters, press the «menu» button once, being on the main screen of the release.

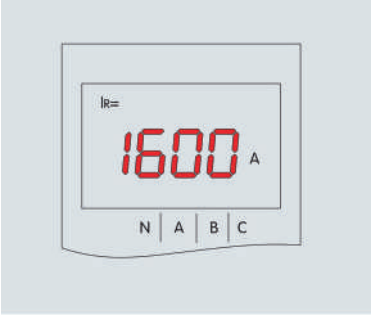

To go to the query of what parameter is set for overcurrent protection, press the «→» button.

а) ток срабатывания

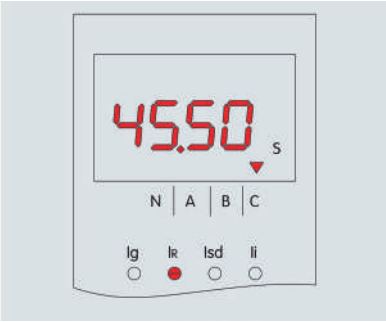

б) время срабатывания

Press the «menu» button twice to enter the triggering request state (display details of the last actuation).

To go to the 6IR simulated triggering state, press the «test» button. The following data can be viewed after actuating.

To return to default interface from any condition, press «RESET» button.

MR5.0 microprocessor trip unit protection setpoints

Parameter	Value	Accuracy
Overload protection current setpoint (I_R) as a multiple of the circuit breaker rated current	0,4; 0,5; 0,6; 0,7; 0,8; 0,9; 0,95; 0,98; 1	tripping at (1,05...1,2) Ir
Setpoints for response time of overload protection at current $6I_R$, s	1; 2; 4; 8; 12; 16; 20; 24; 30	15 %
Current setpoints for short-circuit protection with time delay I_{sd} as a multiple of the operating current (I_{sd}/I_u)	1,5; 2; 2,5; 3; 4; 5; 6; 8; 10	15 %
Trip time setpoints in the short circuit zone, s	0,1; 0,2; 0,3; 0,4; X (I²t off) 0,1; 0,2; 0,3; 0,4 (I²t on)	15 %
Current setpoints for short-circuit protection with instantaneous operation as a multiple of the rated current (I_i), A	2; 3; 4; 6; 8; 10; 12; 15; off	15 %
Current setpoints for ground fault protection current as a multiple of the rated current (I_g), A	A; B; C; D; E; F; G; H; J*	10 %
Trip time setpoints for single-phase ground fault (T_g), s	0,1; 0,2; 0,3; 0,4; X (I²t off) 0,1; 0,2; 0,3; 0,4 (I²t on)	15 %

Accuracy is specified subject to the following conditions:
- power supply of the release from current transducers at full power;
- two-phase or three-phase power supply;
- time setpoint is set ≥ 100 ms;
- availability of additional power supply.

Under other conditions, the response time may be 5 % longer.

Rated current range (Ig), A	Current (I), A	Trip time (tg), c			
(A ~ J) x In +OFF (power off)	<0,9Ig	Does not trip			
	1,1Ig	Trips with delay			
	I²T OFF	0,1	0,2	0,3	0,4
	I²T ON	0,1	0,2	0,3	0,4
	I > J				
	I²T ON	Independent time delay: I²Tg = (J)²tg			
	I				
	≤ J				

Type MR7.0

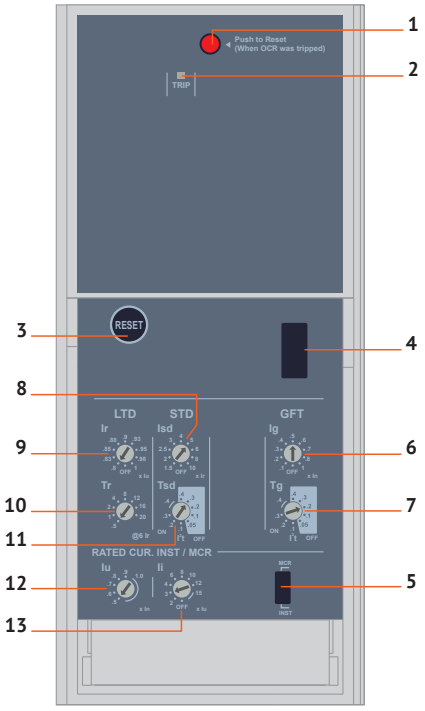

All necessary protection types

OVERCURRENT PROTECTION:
• with long-time delay.

SHORT-CIRCUIT PROTECTION:
• with independent time delay, instantaneous;
• type of protection function curve I^2t on/off (for short-time protection).

GROUND FAULT PROTECTION:
• type of protection function curve I^2t on/off.

1 Button for reset after emergency actuation
2 Tripping indication:
PTI — overcurrent. The LED flashes when the current reaches 1.13 IR
3 Reset button
4 Test device connection socket
5 Selection of I^2t protective characteristic(set by manufacturer)
6 The Ig switch sets the trip current for a single-phase ground fault as a multiple of the rated current (from 0.1 to 1.0 In)
7 The Tg switch sets an independent or inverse time delay for a single-phase ground fault (from 0.05 to 0.4 sec)
8 The Isd switch sets the trip current in the short circuit zone as a multiple of the operating current (from 1.5 to 10 Iu)
9, 12 The Ir and Iu switches set the operating current of the circuit breaker as a multiple of the rated current from 0.4 to 1.0 In (IR = Ir x Iu)
10 The Tr switch sets the time delay in the overcurrent zone (from 0.5 to 20 s with a load current of 6 IR)
11 The Tsd switch sets a short-time delay in the short circuit zone (from 0.05 to 0.4 sec)
13 The Ii switch sets the instantaneous trip current in the short circuit zone as a multiple of Iu (from 2 to 15 In).

Type MR8.0

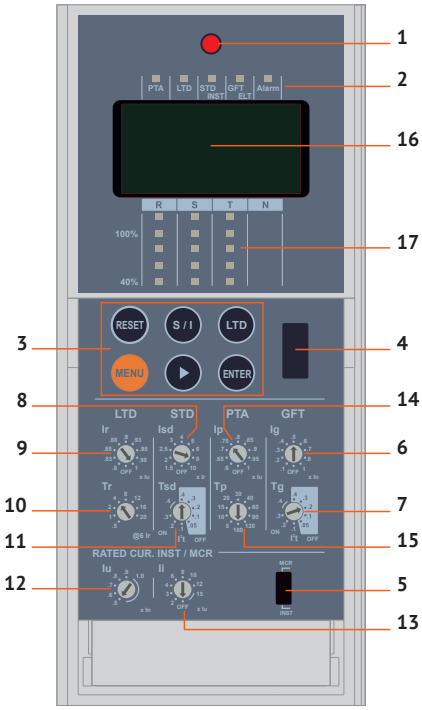

All necessary protection types

OVERCURRENT PROTECTION:
• with long-time delay.

SHORT-CIRCUIT PROTECTION:
• with independent time delay, instantaneous;
• type of protection function curve I^2t on/off (for short-time protection).

GROUND FAULT PROTECTION:
• type of protection function curve I^2t on/off.

OVERCURRENT SIGNALING.

RECORD OF PROTECTION TRIPS:
• recording of the 10 latest events (trip cause, trip current value, trip phase and time).

DATA EXCHANGE INTERFACE:
Modbus/RS485.

1 Button for reset after emergency actuation
2 Tripping indication:
PTA — overload alarm indication
LTD — overload trip
STD/INST — short circuit tripping
GFT/ELT — ground fault tripping
Alarm — microprocessor trip unit actuation
3 Menu navigation and self-test button
4 Test device connection socket
5 Selection of I^2t protective characteristic(set by manufacturer)
6 The Ig switch sets the trip current for a single-phase ground fault as a multiple of the rated current (from 0.1 to 1.0 In)
7 The Tg switch sets an independent or inverse time delay for a single-phase ground fault (from 0.05 to 0.4 sec)
8 The Isd switch sets the trip current in the short circuit zone as a multiple of the operating current (from 1,5 to 10 IR)
9, 12 The Ir and Iu switches set the operating current of the circuit breaker as a multiple of Iu from 0,4 to 1,0 In (IR = Ir x Iu)
10 The Tr switch sets the time delay in the overcurrent zone (from 0.5 to 20 s with a load current of 6 IR)
11 The Tsd switch sets a short-time delay in the short circuit zone (from 0,05 to 0,4 s)
13 The Ii switch sets the instantaneous trip current in the short circuit zone as a multiple of the rated current (from 2 to 15 In)
14 The Ip switch sets the current for circuit switching on the overcurrent alarm as a multiple of the current Iu
15 The Tp switch sets the time for circuit switching on the alarm about overcurrent from the moment it occurs
16 LCD display
17 LED scales for indicating currents of three phases

MR8.0 LCD display

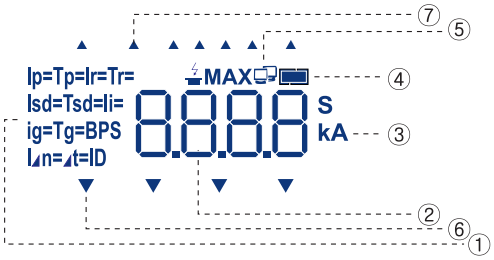

1. Shows current and time setpoints. Displays setpoint values and events.
2. Display of numeric characters and symbols. Displays current, time and simple symbols.
3. Displays units, values of time and current.
4. Battery charge control. A 3.6 V battery is installed in the microprocessor trip unit (lithium). Battery status indication. Blinking at a frequency of 0.5 sec means that the battery is low and needs to be replaced.
5. Connection indication. Displays connection speed, address and screen settings.
6. Displays measured current, phase and load level.
7. Displays information about emergencies and commutations. It is displayed within 1 sec after the microprocessor trip unit has been energized, and then returns to screen of measurements.

Picture	Button	Description
2000 A		1. The current in R / S / T / N phases is displayed on the screen at 3-second intervals. 2. The current of each phase is displayed. (▶) The form moves from left → to right. 3. The LED bar graph shows the load level of each phase at 40 ~ 110 %.
▶	▶	1. Pressing the (▶) button is used to go to the next step. • Measurement screen: go to next phase current reading. • Setpoint setting: view a description of the next setting. • Time view: year, month → day, hour → minutes, seconds. 2. By pressing for about 3 ~ 4 seconds on the measurement screen, the current of the displayed phase can be measured. (Hold down for a short time, then release).
MENU	MENU	Used to check parameter values, view emergency/event log, time and communication parameters.
S / I	S/I	1. Used for short-time delay/instantaneous protection, SELF-TESTING. 2. Priority of tripping without time delay. 3. Instantaneous trip when no time delay is set for the short-time delay protection/instantaneous protection.
LTD	LTD	1. Used for long tripping delay protection, SELF-TESTING. 2. Not available unless a long tripping delay has been set.
ENTER	ENTER	1. Used to view event/fault description and change date/time. 2. After going to the description, check or change the use of the MENU button, press the ENTER button to go to the next step.
RESET	RESET	1. Return to the initial state after trip, reset of messages about events and emergencies. 2. The combination of LCD display elements and tripping information shown by LEDs will be on for about 0.5 second. 3. When the tripping information is displayed using backup battery power, the LED indication will be turned off.

		Screen readings	Button	Description
LTD	curren	Ir= 2000 A	M ▶	1. Press the Menu (M) button once, while in the Measurements menu, to access the Settings menu. 2. The first screen displays the current setpoint for the long-time delay protection, press the tab key to view values of other settings. 3. Screen top: «I_r =» is displayed.
	time	Tr= 4.00 S	M ▶x1 times	1. Press the tab key once in the settings view menu to check the time setpoint for long-time delay protection. 2. Screen top: «T_r =» is displayed.
STD	curren	Isd= 16.00 kA	M ▶x2 times	1. Press the tab key 2 times in the settings view menu to check the current setpoint for short-time delay protection. 2. Screen top: «I_{sd} =» is displayed.
	time	Tsd= 0.400 S	M ▶x3 times	1. Press the tab key 3 times in the settings view menu to check the time setpoint for short-time delay protection. If an inverse time delay I^2t has been selected, the displayed value will be greater than the set value by 1 in the last digit. Example: At I^2t specified delay 0.400 s. is ON: displayed as 0.401 s. 2. Screen top: «T_{sd} =» is displayed.
INST	curren	Ii= 24.00 kA	M ▶x4 times	1. Press the tab key 4 times in the settings view menu to check the instantaneous protection current setpoint. 2. Screen top: «I_i =» is displayed.
PTA	curren	Ip= 1.800 A	M ▶x5 times	1. Press the tab key 5 times in the settings view menu to check the current setpoint for overcurrent warning (PTA). 2. Screen top: «I_p =» is displayed.
	time	Tp= 20 S	M ▶x6 times	1. Press the tab key 6 times in the settings view menu to check the time setpoint for overcurrent warning (PTA). 2. Screen top: «T_p =» is displayed.
GFT	ток	Ig= 800 A	M ▶x7 times	1. Press the tab key 7 times in the settings view menu to check the current setpoint for ground fault protection. 2. Screen top: «I_g =» is displayed.
	время	Tg= 0.400 S	M ▶x8 times	1. Press the tab key 8 times in the settings view menu to check the time setpoint for ground fault protection. If an inverse time delay I^2t has been selected, the displayed value will be greater than the set value by 1 in the last digit. Example: With I^2t on, set delay 0.400 s.: is displayed as 0.401 s. 2. Screen top: «T_g =» is displayed.

Type MR8.1

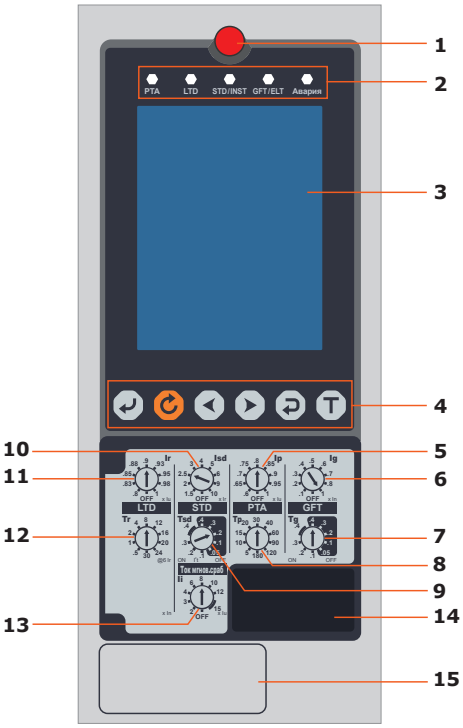

All necessary protection types

OVERCURRENT PROTECTION:
• with long-time delay.

SHORT-CIRCUIT PROTECTION:
• with independent time delay, instantaneous;
• type of protection function curve I^2t on/off (for short-time protection).

GROUND FAULT PROTECTION:
• type of protection function curve I^2t on/off.

OVERCURRENT SIGNALING.

RECORD OF PROTECTION TRIPS:
• recording of the 300 latest events (trip cause, trip current value, trip phase and time).

CONTACT PROGRAMMING FUNCTION.

MENU IN RUSSIAN

DATA EXCHANGE INTERFACE:
Modbus RTU/RS485.

1 Reset button
2 Emergency indication
3 LCD display
4 Control and setting button box
5. «Ip» setting the value of the overload alarm circuit switching current as a multiple of the current Ir.
6. «Ig» setting of ground fault current setpoint value.
7. «Tg» setting of ground fault protection operation delay.
8. «Tp» setting the time for enabling the overload alarm from the moment it occurs.
9. «Tsd» setting of short-time delay.
10. «Isd» setting of current setpoint value for short circuit protection.
11. «Ir» setting of current setpoint value for overcurrent protection.
12. «Tr» setting of overcurrent protection delay.
13. «Ii» setting of current setpoint value for instantaneous short circuit protection.
14. Multifunctional connectors.
15. Battery cubicle.

LCD display MR8.1

Button	Purpose	Description
	Enter, menu selection (ENTER)	• Used for menu selection; • Used to save changed settings.
	Error reset (RESET)	• Used for screen update; • Used for error indication update; • When the tripping information is displayed using backup battery, pressing the RESET button may turn off the main screen.
	Move left (LEFT)	• Used to navigate menu or change parameters and select values.
	Move right (RIGHT)	• Used to navigate menu or change parameters and select values.
	Return (RETURN)	• Used to navigate the main menu; • Navigates to the «Save» screen if there are changes in the settings screen.
	Testing (TEST)	• Run a test using the given test condition.

The MR8.1 microprocessor trip unit includes the following main menus:
«Measurements» — to view the actual values of current and current readings in each phase.
«System» — to change the rated current, rated frequency, system settings, system time, password, language, assignment of digital outputs and self-test settings.
«Setpoints» — to change the setpoints.
«Data log» — to view information about trips and emergencies.

The main screen displays the following information:

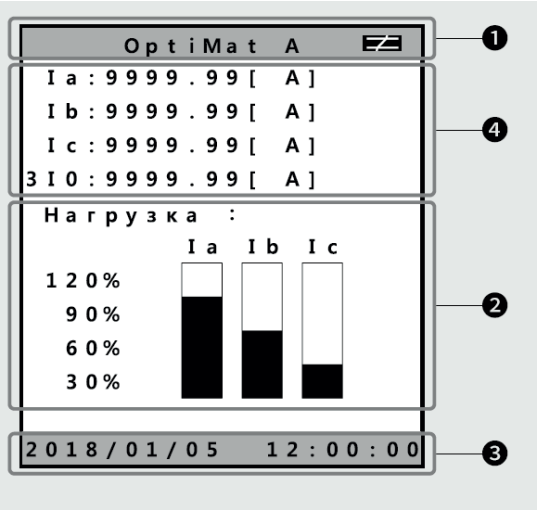

1 Display internal battery status and menu name.
2 Display load indication of each phase.
3 Display date and time.
4 Display exact value of current in each phase.

Protection setpoints for microprocessor trip units MR7.0, MR8.0, MR8.1

Parameter	Value	Accuracy
Overload protection setpoint (IR) as a multiple of the circuit breaker operating current IR= I_r x I_u	I_r = 0,8; 0,83; 0,85; 0,88; 0,9; 0,93; 0,95; 0,98; 1,0 I_u = 0,5; 0,6; 0,7; 0,8; 0,9; 1	tripping at (1,05..1,2) Ir
Trip time setpoints at current of 6 IR, s (T_r)	0,5; 1; 2; 4; 8; 12; 16; 20	+15 %
Current settings for short-circuit protection with short-time delay Isd as a multiple of the operating current (I_{sd}/IR)	1,5; 2; 2,5; 3; 4; 5; 6; 8; 10	+15 %
Trip time setpoints in the short circuit zone, s (T_{sd})	0,05; 0,1; 0,2; 0,3; 0,4 (I^2t OFF) 0,1; 0,2; 0,3; 0,4 (I^2t ON)	+0,03 s
Setpoints for instantaneous operation current (I_i) as a multiple of current Iu, A (T_i no more than 0,05 s)	2; 4; 6; 8; 10; 12; 15	+15 %
Overcurrent alarm current setpoints (I_p/I_u)	0,6; 0,65; 0,7; 0.75; 0,8; 0,85; 0,9; 0,95; 1,0	+15 %
Setpoints for the activation time of the overcurrent alarm (T_p), s	5; 10; 15; 20; 30; 40; 60; 90; 120; 180	+15 %
Current settings for ground fault protection as a multiple of the rated current (I_g/I_n)	0,1; 0,2; 0,3; 0,4; 0,5; 0,6; 0,7; 0,8; 1	+20 %
Setpoints for response time of earth fault protection (T_g), s	0,05; 0,1; 0,2; 0,3; 0,4 (I^2t OFF) 0,1; 0,2; 0,3; 0,4 (I^2t ON)	+0,03 s

Information transmitted by microprocessor trip unit MR8.0, MR8.1

Supported protocol	Modbus RTU
Physical layer	RS485
Maximum data transfer rate	38400 bit/sec
Maximum number of devices in parallel operation	100
Settings information	
Ir	Overload protection setting (set by circuit breakers Ir and Iu as a multiple of the rated current from 0.4In to 1.0In (IR = Ir*Iu))
Tr	Overload protection response time setpoint (from 0.5 to 30 s at 6IR current load)
Isd	Trip current in the short circuit zone (from 1.5 to 10 IR)
Tsd	Short-time delay in the short circuit zone (from 0.05 to 0.4 sec)
Ii	Instantaneous trip current in the short circuit zone as a multiple of the operating current (from 2 to 15 In)
Ip	Overcurrent alarm current as a multiple of current Iu
Tp	Activation time for overcurrent alarm from the moment of its occurrence
Ig	Ground fault protection trip current as a multiple of the rated current (from 0.1 to 1.0 In)
Tg	Short-time delay of earth fault protection (from 0.05 to 0.4 s)
Circuit breaker tripping information	
Current in phases during the circuit breaker trip	
Trip current at ground fault	
Year, month, date, time (minutes and seconds) of circuit breaker trip	
Cause for the circuit breaker trip and the phase with the maximum current value when the circuit breaker is tripped	
Maximum current in one of the phases during the circuit breaker trip	
Measured parameters	
Measured value of the current in phases	

Time-current characteristics of switches with a microprocessor trip unit MR5.0

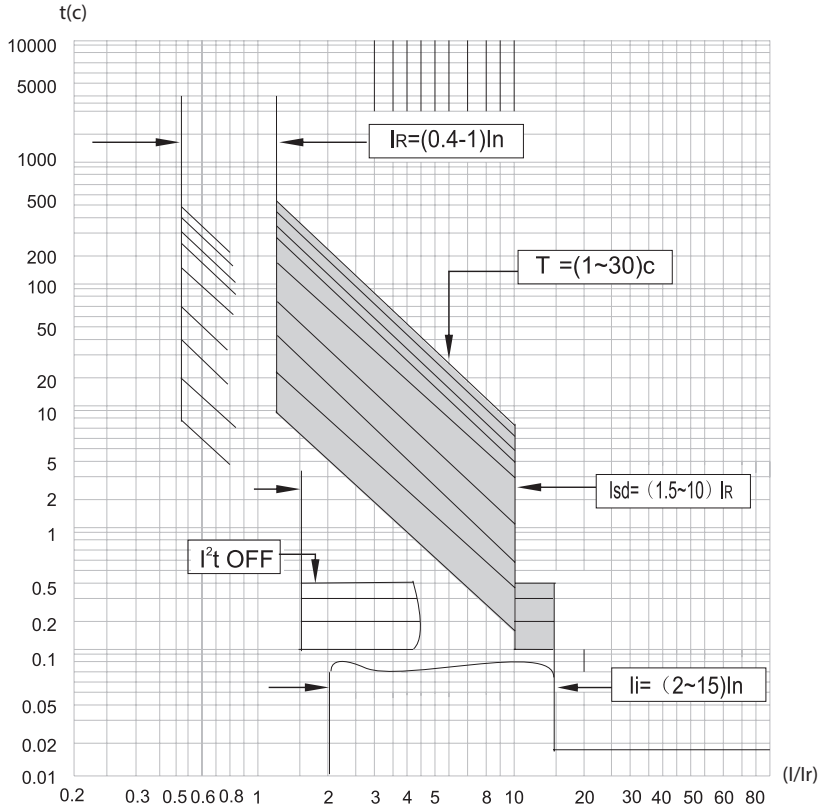

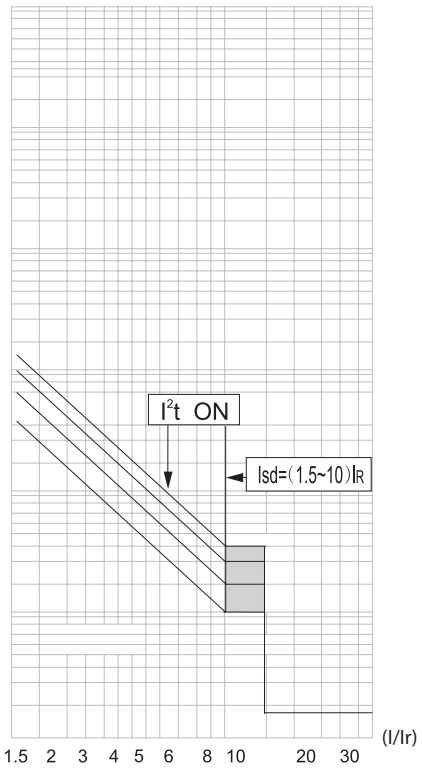

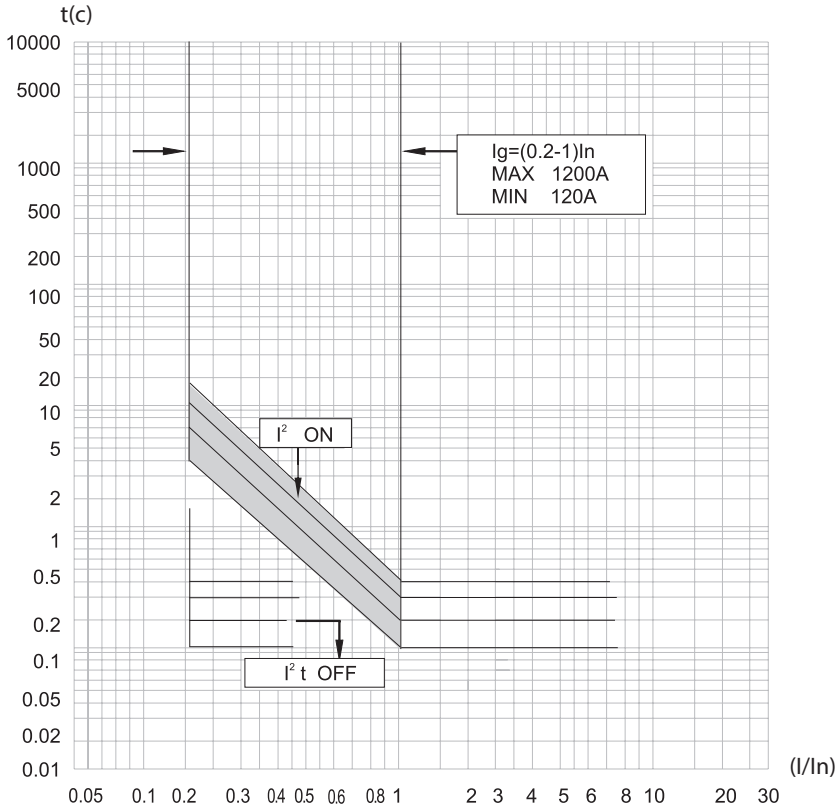

Time-current characteristics of switches with a microprocessor trip unit MR7.0, MR8.0, MR8.1

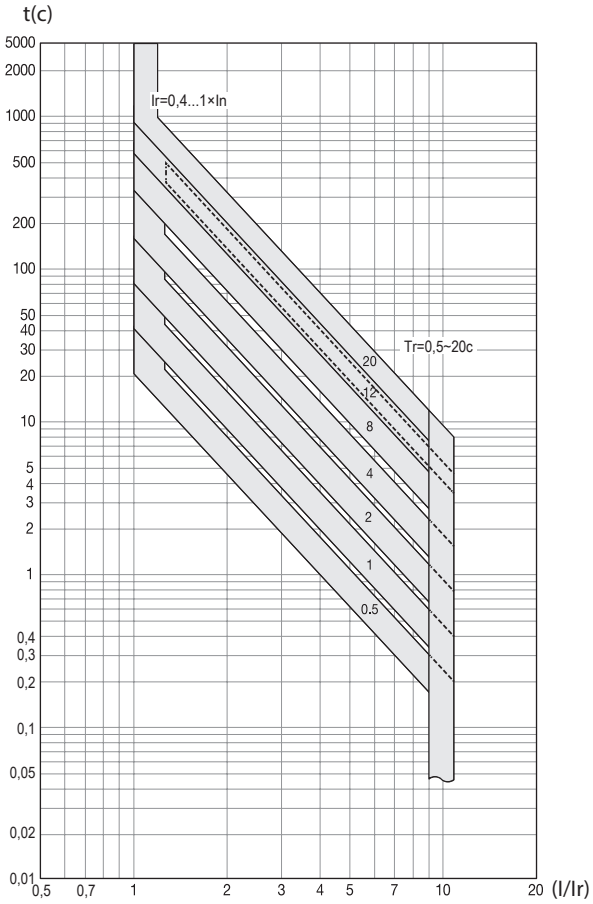

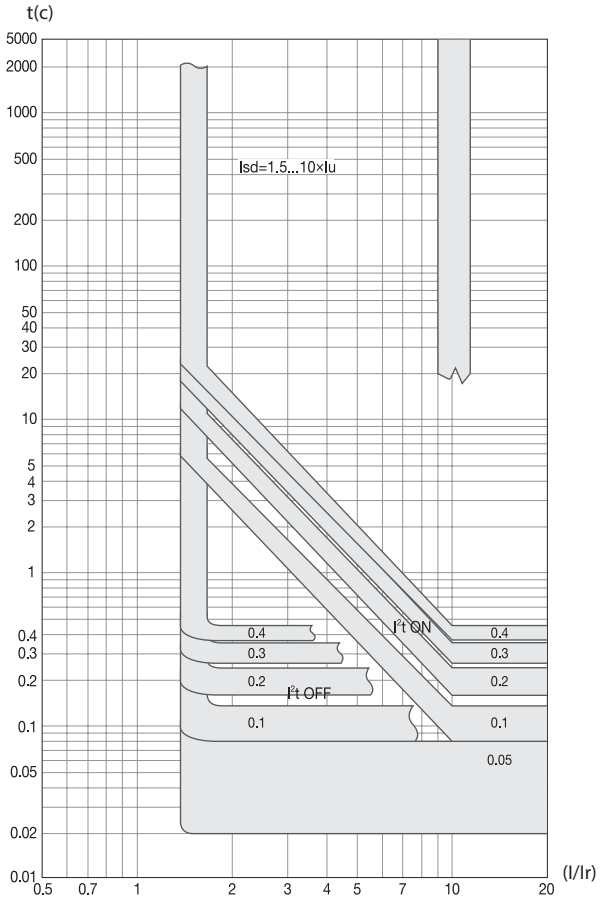

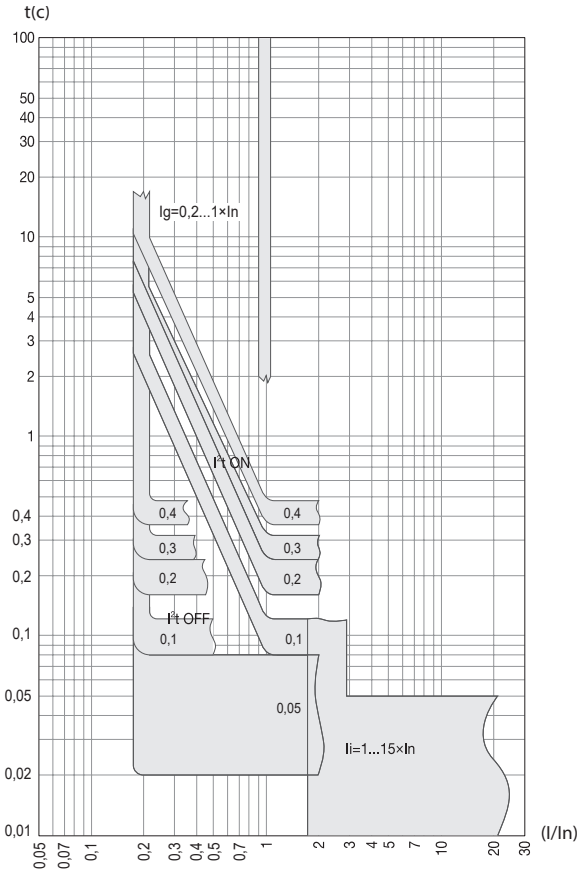

Accessories OptiMat A for sizes S2, S4, S6 (150 kA)

Shunt trip

Shunt trip is designed for circuit breaker remote opening. The shunt trip causes the circuit breaker to trip under any operating conditions when the supply voltage remains between 0.75 and 1.1 Ue. Unified for OptiMat A circuit breakers of sizes S2, S4, S6 (150 kA). Installed under the front panel of the circuit breaker in its own cubicle.

Second shunt trip

Second shunt trip is designed for circuit breaker remote opening and it is a backup system of the shunt trip. The technical specifications correspond to those of the shunt trip. It is installed if there are additional requirements for the reliability of systems that include an air circuit breaker. It mutually exclusive item with undervoltage release.

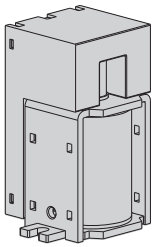

Product name	Shunt trip OptiMat A-230AC/DC-UHL3	Shunt trip OptiMat A-110AC/DC-UHL3	Shunt trip OptiMat A-24DC-UHL3
Code	217987	217986	272026
Operating voltage, V	230AC / 220DC	110 AC/DC	24 DC
Operating voltage range	(0,75–1,1) Ue		
Power consumption, VA, W	200		
Operating mode	Short-time (pulse)		
Break time, ms	max. 50		

Closing coil

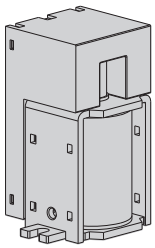

Actuating coil is designed for circuit breaker remote closure. Unified for OptiMat A circuit breakers of sizes S2, S4, S6 (150 kA). Installed under the front panel of the circuit breaker in its own cubicle.

Product name	Closing coil OptiMat A-230AC/DC-UHL3	Closing coil OptiMat A-110AC/DC-UHL3	Closing coil OptiMat A-24DC-UHL3
Code	217989	217988	272020
Operating voltage, V	230AC / 220DC	110 AC/DC	24 DC
Operating voltage range	(0,75–1,1) Ue		
Power consumption, VA, W	200		
Operating mode	Short-time (pulse)		
Break time, ms	max. 50		

Undervoltage release

The undervoltage release is designed to open the circuit breaker when the voltage drops below the established standards. If there is no supply voltage at the undervoltage release, automatic or manual closing is not possible. The undervoltage release causes the circuit breaker to open under any operating conditions when the supply voltage varies between 0.75 and 1.1 Ue. Closing of the circuit breaker becomes possible when the undervoltage release is supplied with voltage from 0.75 to 1.1 Ue. It is unified for OptiMat A circuit breakers of sizes S2, S4, S6 (150 kA). Installed under the front panel of the circuit breaker in its own cubicle. It is mutually exclusive with the second shunt trip.

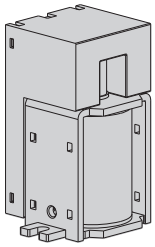

Product name	Undervoltage release OptiMat A-230AC/DC-UHL3
Code	217994
Operating voltage, V	230AC / 220DC
Circuit breaker-on voltage range	(0,85–1,1) Ue
Circuit breaker-off voltage range	(0,35-0,7) Ue
Power consumption, VA	200
Operating mode	Short-time (pulse)
Break time, ms	max. 50

Signaling contact of the circuit breaker main contacts closure readiness

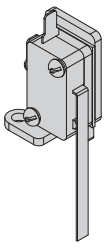

Contact of the circuit breaker main contacts closure readiness signaling is designed to inform of the spring condition (charged/not charged), which closes the circuit breaker. Unified for OptiMat A circuit breakers of sizes S2, S4, S6 (150 kA). Installed under the front panel of the circuit breaker in its own cubicle.

Product name	Contact of the circuit breaker main contacts closure readiness signaling OptiMat A630-4000-UHL3	
	Voltage, V	Active load, A
Alternating current, VA	250	8
	125	16
Direct current, W	250	0,3
	125	0,6

Auxiliary contacts

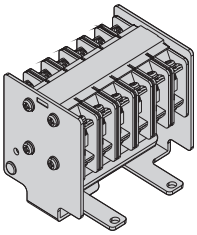

Auxiliary contacts are designed for signaling of the circuit breaker state. The devices are unified for OptiMat A circuit breakers of sizes S2, S4, S6 (150 kA). Installed under the front panel of the circuit breaker in its own cubicle.

Product name	Auxiliary contacts	
	Voltage, V	Inductive load, A
Alternating current	250	5
Direct current, W	30	3
Configuration of contacts	6a+6b	

Control circuit connector set

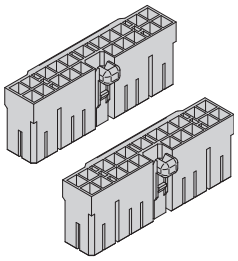

The control circuit connector set is used to connect external secondary circuits of the user for signaling and control. It is mounted to the external wiring and connected to the circuit breaker. It is included in the basic package of oversized circuit breakers S2, S4, S6 (150 kA).

Product name		Control circuit connector kit OptiMat A-UHL3
Code		234555
Quantity of delivery	Plastic terminal block	2
	Female pin contact	15

Motor drive for charging the actuating springs

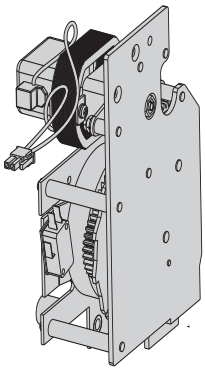

Motor drive is designed to charge circuit breaker's actuating spring. If the motor drive is not powered, the actuating spring is charged manually. The device is unified for OptiMat A circuit breakers of sizes S2, S4, S6 (150 kA). Installed under the front panel of the circuit breaker in its own cubicle.

Product name	Motor drive OptiMat A630-4000-230AC/DC-UHL3	Motor drive OptiMat A630-4000-110AC/DC-UHL3
Code	235993	217990
Operating voltage, V	230AC / 220DC	110AC/DC
Maximum current consumption, A	0,5	
Motor speed, rpm	16000–19000	
Maximum start current	5In	
Charge time, sec	max. 5	
Insulation strength	2 kV for 1 min	
Operating temperature range, °C	-25...+60	
Operating frequency max. 2 times/min	max. 2 times/min	
Mechanical wear resistance, cycles	20000	

Lock 3

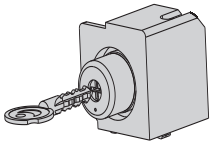

The built-in closure lock is designed to prevent closing (locks the circuit breaker in the open state). The circuit breaker lock cannot be released without the appropriate key. The device is unified for OptiMat A circuit breakers of sizes S2, S4, S6 (150 kA). Installed under the front panel of the circuit breaker in its own cubicle.

Product name	built-in connection lock OptiMat A
Code	217999
Number of keys in the set, pcs	1

Isolating shutters

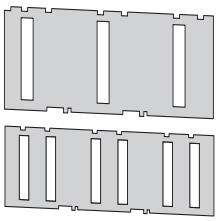

Isolating shutters are designed to prevent access to the current-carrying contacts of the fixed part when the circuit breaker is in the «drawn out» or «test» position (IP20 rating). They are installed in the circuit breaker basket.

Insulating shutters are included in all versions of withdrawable circuit breakers and fixed parts.

Indicator of switch position in basket

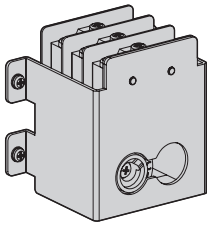

Position indication shows the circuit breaker state: DRAWN IN/TEST/DRAWN OUT. It is installed to the left or right of the circuit breaker on the basket. Unified for sizes S2, S4, S6 (150 kA).

Product name	Indicator of switch position in OptiMat A-UHL3 basket		
Code	267249		
Voltage, V		Active load	Inductive load
Alternating current, VA	250	5	2,5
	125	10	10
Direct current, W	250	3	1,5
	125	10	10

Undervoltage release tripping delay controller

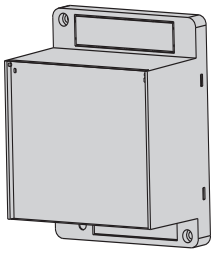

Controller is designed to prevent undervoltage release tripping in case of short-time outages or voltage slumps of supply equipment. An undervoltage release is required for connection as part of the circuit breaker. It is installed on a din-rail or the side wall of the circuit breaker.

Product name	Undervoltage release tripping delay controller OptiMat A-UHL3
Code	236607
Time delay, sec	0,5; 1,0; 1,5; 3

Inter-pole partitions

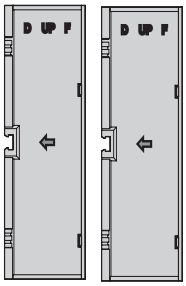

Inter-pole partitions are designed to prevent interphase short circuit formation. The devices are unified for OptiMat A circuit breakers of sizes S2, S4, S6 (150 kA). They are installed in the corresponding slots between the main terminals of the circuit breaker. They are the part of basic configuration.

Product name	Inter-pole partitions OptiMat A630-4000-UHL3-2 pcs
Code	269618
Number of partitions in the set	2

Mechanical cycle counter

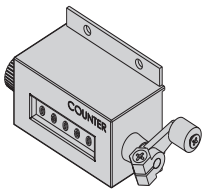

The mechanical cycle counter is designed to indicate the number of on/off cycles. Unified for OptiMat A circuit breakers of sizes S2, S4, S6 (150 kA). Installed under the front panel of the circuit breaker in its own cubicle.

Lifting lugs

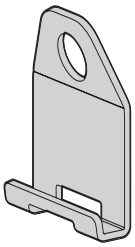

The lifting lugs are designed to facilitate lifting and movement of the circuit breaker.

Product name	Lifting lugs OptiMat A-UHL3-2 pcs
Code	240745

Microprocessor trip unit reset mechanism

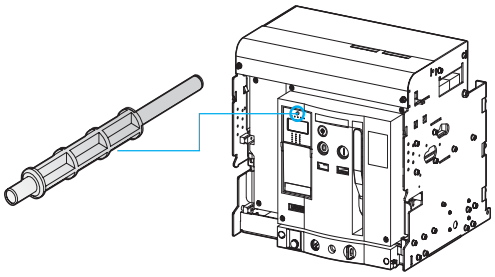

The module at the base of the microprocessor trip unit is equipped with a button for manual reset after tripping from the microprocessor trip unit. When the circuit breaker is triggered, the button slides forward.
To close the circuit breaker, press the button. Unified for OptiMat A circuit breakers of sizes S2, S4, S6 (150 kA). Installed under the front panel of the circuit breaker in its own cubicle. It is part of the basic configuration.

Mechanical interlock

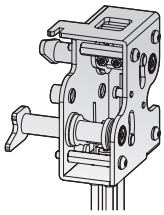

The mechanical interlock is designed for mutual interlocking of closing/opening operations of two or three circuit breakers. Unified for sizes S2, S4, S6 (150 kA). They are installed only on withdrawable circuit breakers.

Product name	Code
Mechanical interlock kit for 2 OptiMat A630-4000-UHL3	242120
Mechanical interlock kit for 3 OptiMat A630-4000-UHL3	248580

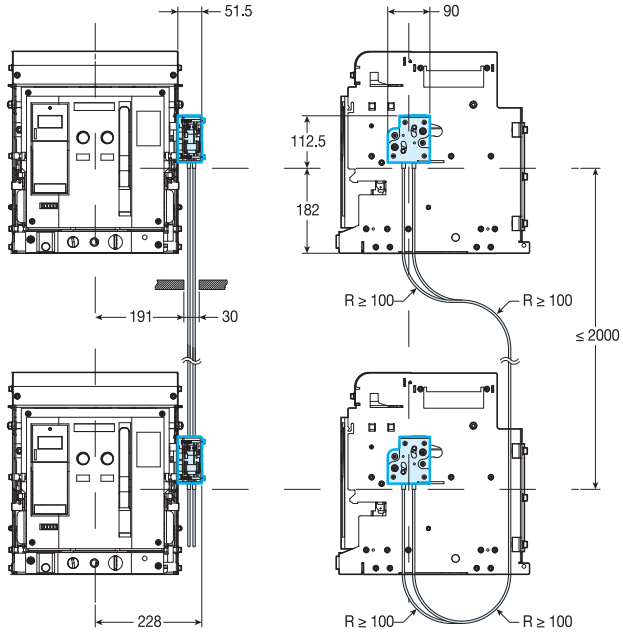

Type A. Two devices
One regular power supply and one redundant power supply.

A	B
0	0
0	1
1	0

This type of interlock prevents two circuit breakers from being switched on at the same time.

Three devices
Connection via one source, sectional circuit breaker is closed. Each one is powered by its own transformer, the sectional circuit breaker is open.

A	B	C
0	0	0
1	0	0
0	1	0
0	0	1
1	1	0
0	1	1
1	0	1

This type of interlock allows the simultaneous closing of two of the three circuit breakers.

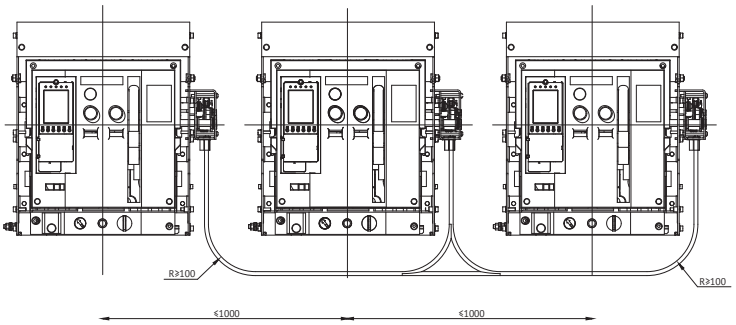

Front panel frame

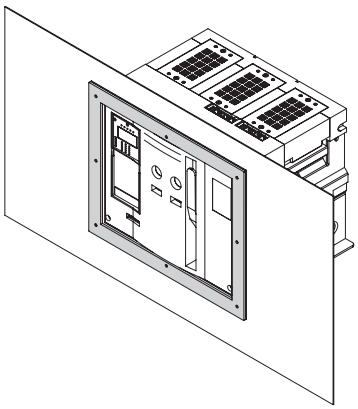

The front panel frame is designed to increase protection against touching the sharp edge of the cutout. In addition, it protects the protruding front part of the circuit breaker. It is installed on the switchgear front panel. Front panel frames are included as standard.

Microprocessor trip unit tester

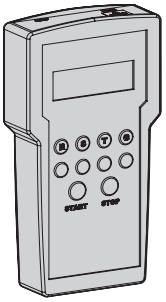

Tester for microprocessor trip units of circuit breakers of the OptiMat A series is designed for testing microprocessor trip units of the MR7.0, MR8.0, MR8.1 series. Testing is done by connecting to the trip unit connectors and allows you to check the operation of the device in emergency modes and the integrity of the internal electrical circuit.

Parameter		Value
Rated frequency, Hz		50/60
AC supply voltage, V		100-240
Battery	Standard size	LR6 (AA)
	Rated voltage, V	1,5
	Quantity, pcs.	6
Power consumption, max, W:		
- in settings mode;		10
- in testing mode.		20

Product name	Code
OptiMat A microprocessor trip unit tester	236610

Mounting accessories OptiMat A of sizes S1, S5, S6 (120 кА)

Closing coil and shunt trip

The closing coil is designed for remote closing of the circuit breaker, and the shunt trip is designed for remote opening of the circuit breaker. They are designed for operation in AC and DC circuits.

Operating voltage Ue, V	230AC/220DC
Trip voltage range, V	(0,7 ~ 1,1) Ue
Power consumption, VA or W	200
Break time	50±10 ms

Motor drive

The motor drive is designed for remote charging of the circuit breaker mechanism, pre-compression of the actuating spring, i.e. preparing the circuit breaker for closing. The rated duty of the motor drive is short-term. The motor drive is designed for operation in an AC or DC circuit.

Operating voltage Ue, V	230AC/220DC
Trip voltage range, V	(0,85 ~ 1,1)Ue
Power consumption, VA or W	150
Charge time, sec	<8
Charging frequency	up to three cycles per minute

Circuit diagrams OptiMat A

Electric circuit diagram of circuit breaker with semiconductor release MR5.0 type of S1 dimension version

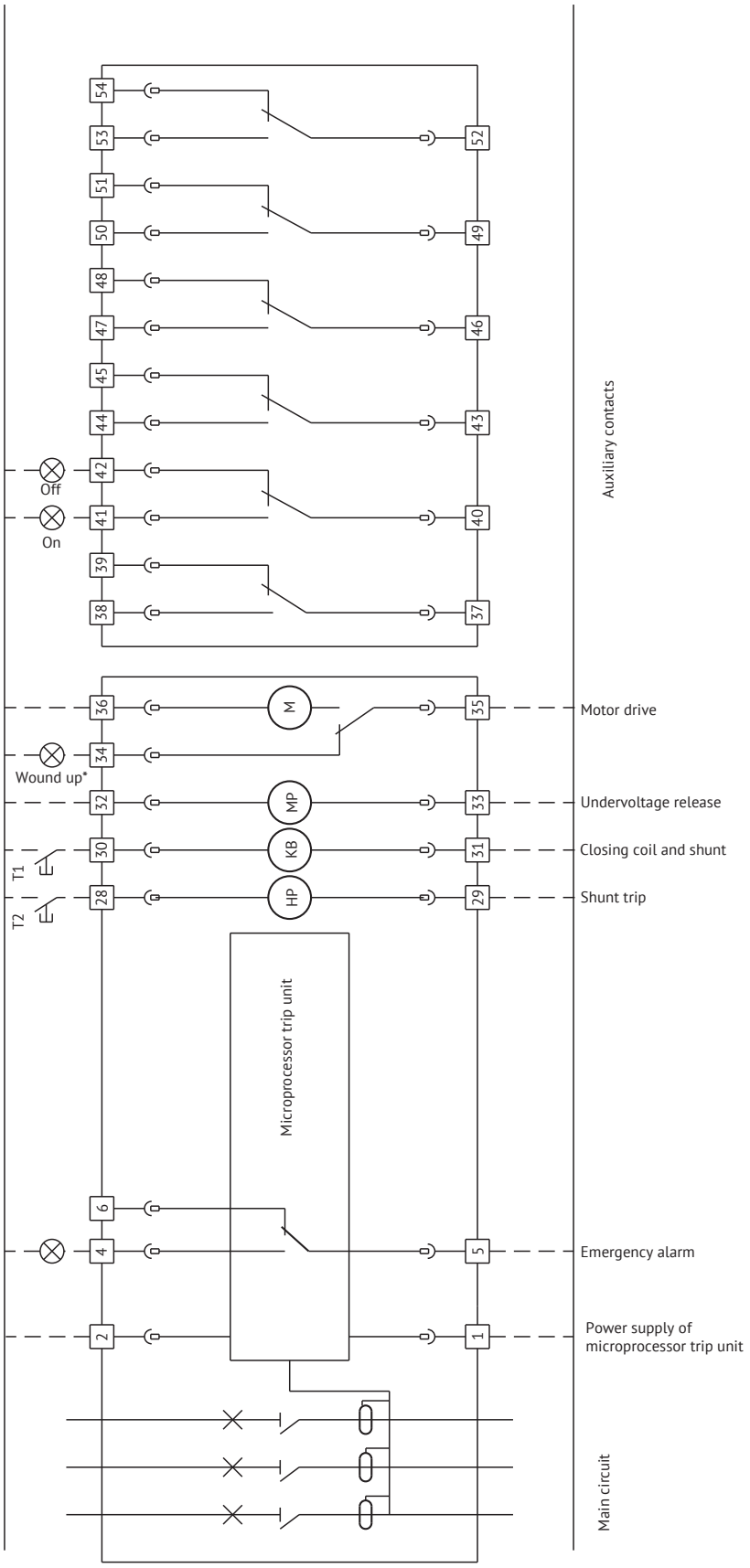

* Terminal 34 (charged) is not galvanically separated from terminal 36

The dotted line indicates the connections made by the consumer.

Electrical schematic diagram of circuit breaker with semiconductor release MR5.0 type of S5, S6 dimension version

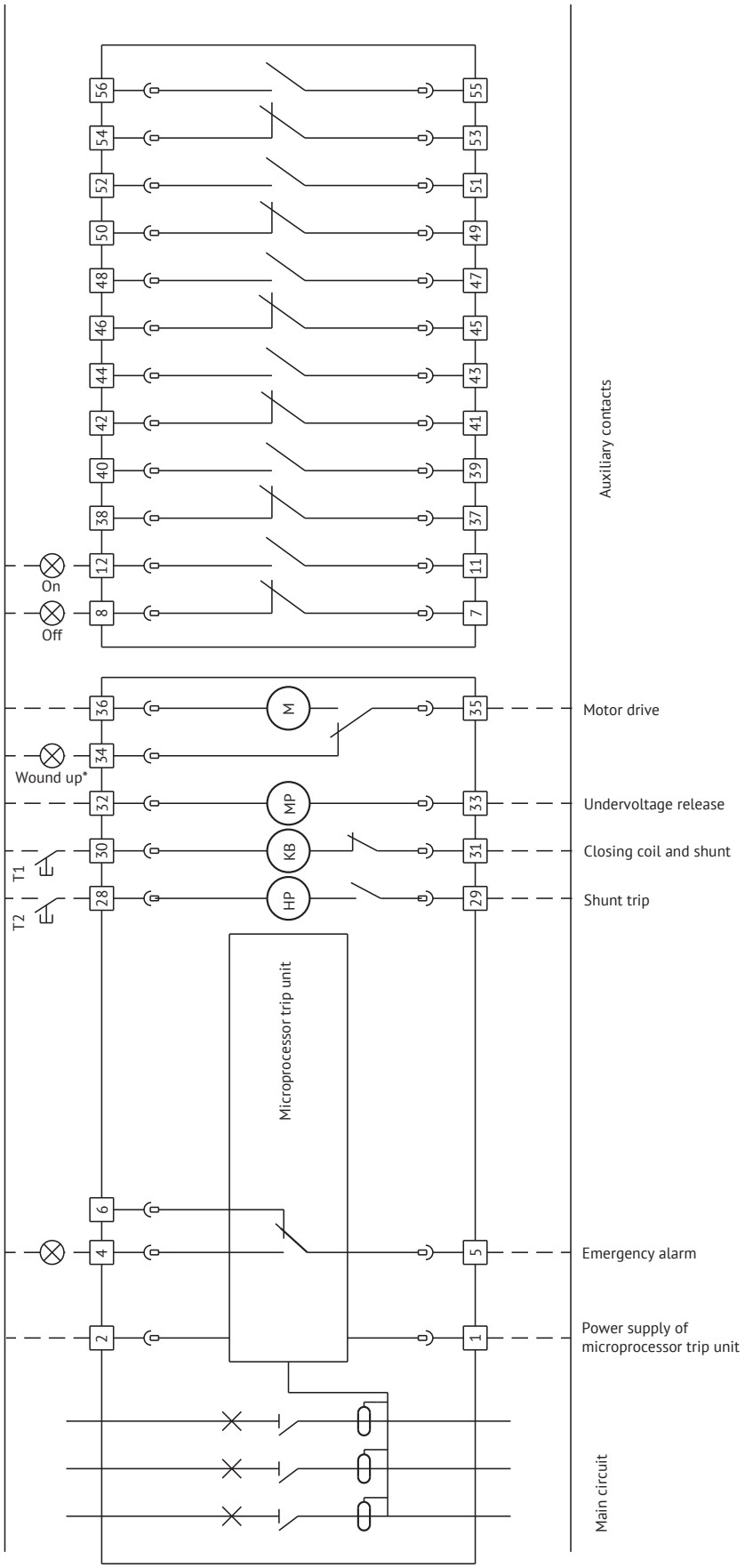

* Terminal 34 (charged) is not galvanically separated from terminal 36

The dotted line indicates the connections made by the consumer.

Electric circuit diagram of circuit breaker without semiconductor release of S2, S4 dimension version

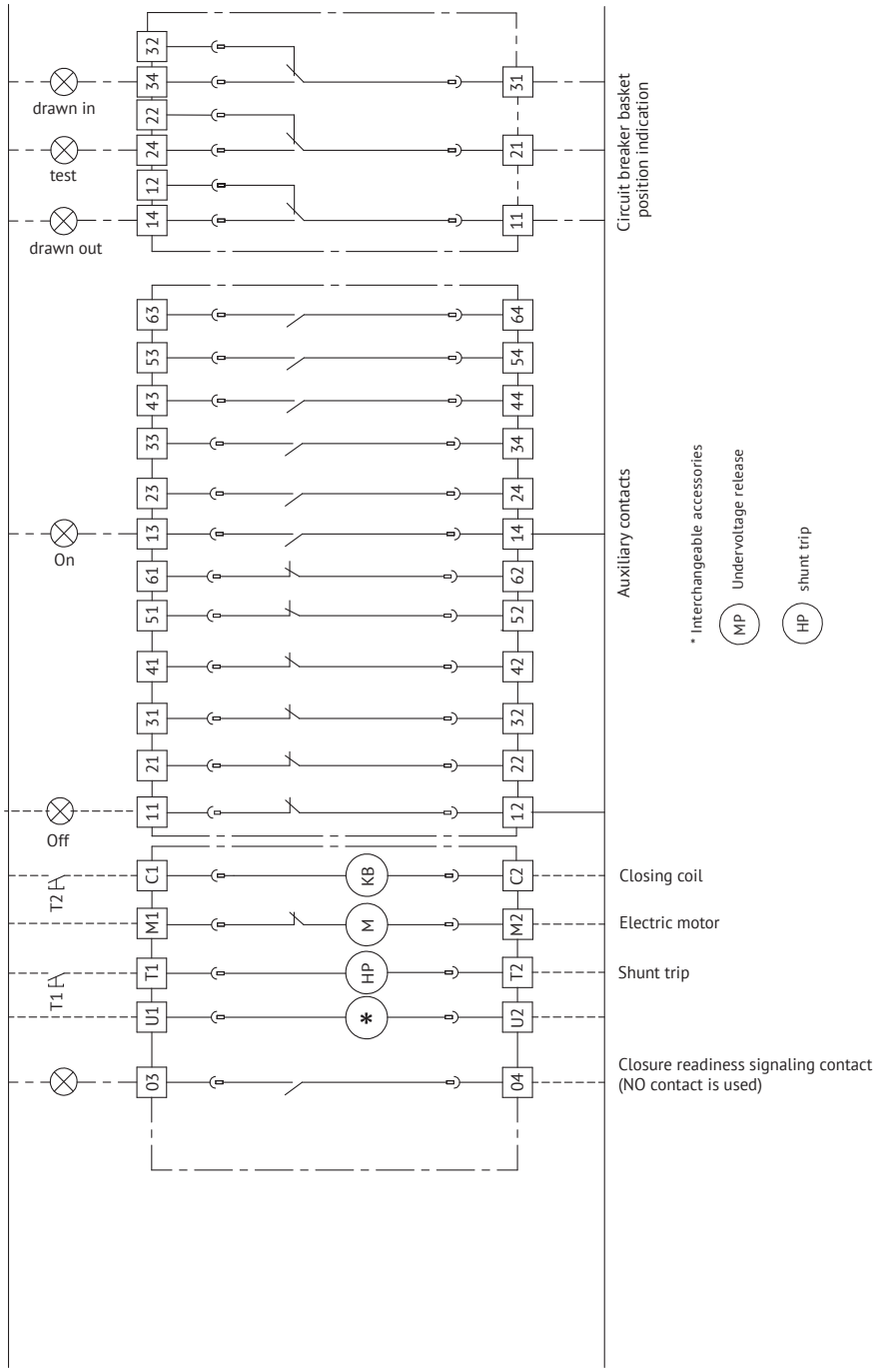

The dotted line indicates the connections made by the consumer.

Electrical schematic diagram of circuit breaker with semiconductor release MR7.0 type of S2, S4, S6 dimension version

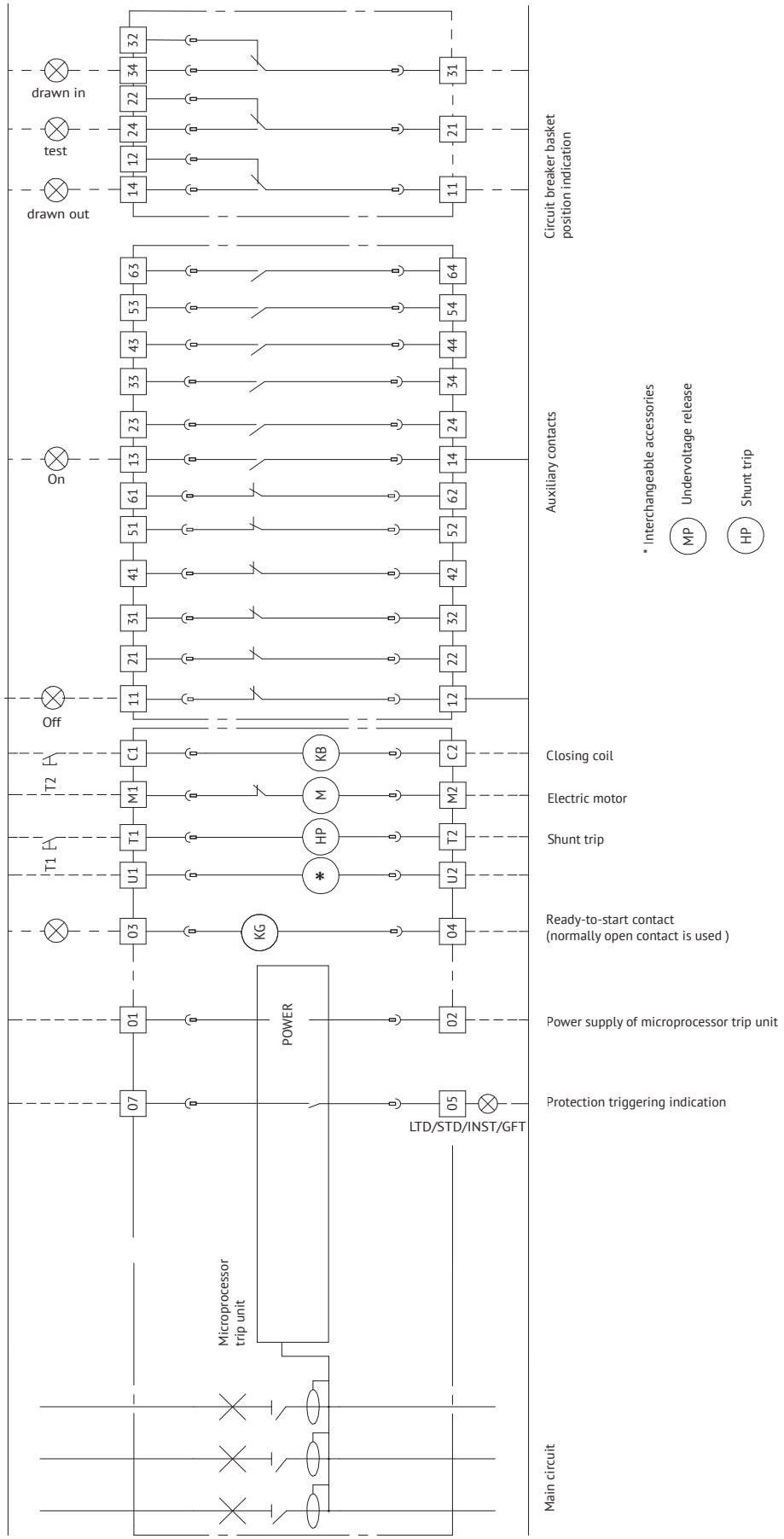

The dotted line indicates the connections made by the consumer.

Electrical schematic diagram of circuit breaker with semiconductor release MR8.0 type of S2, S4, S6 dimension version

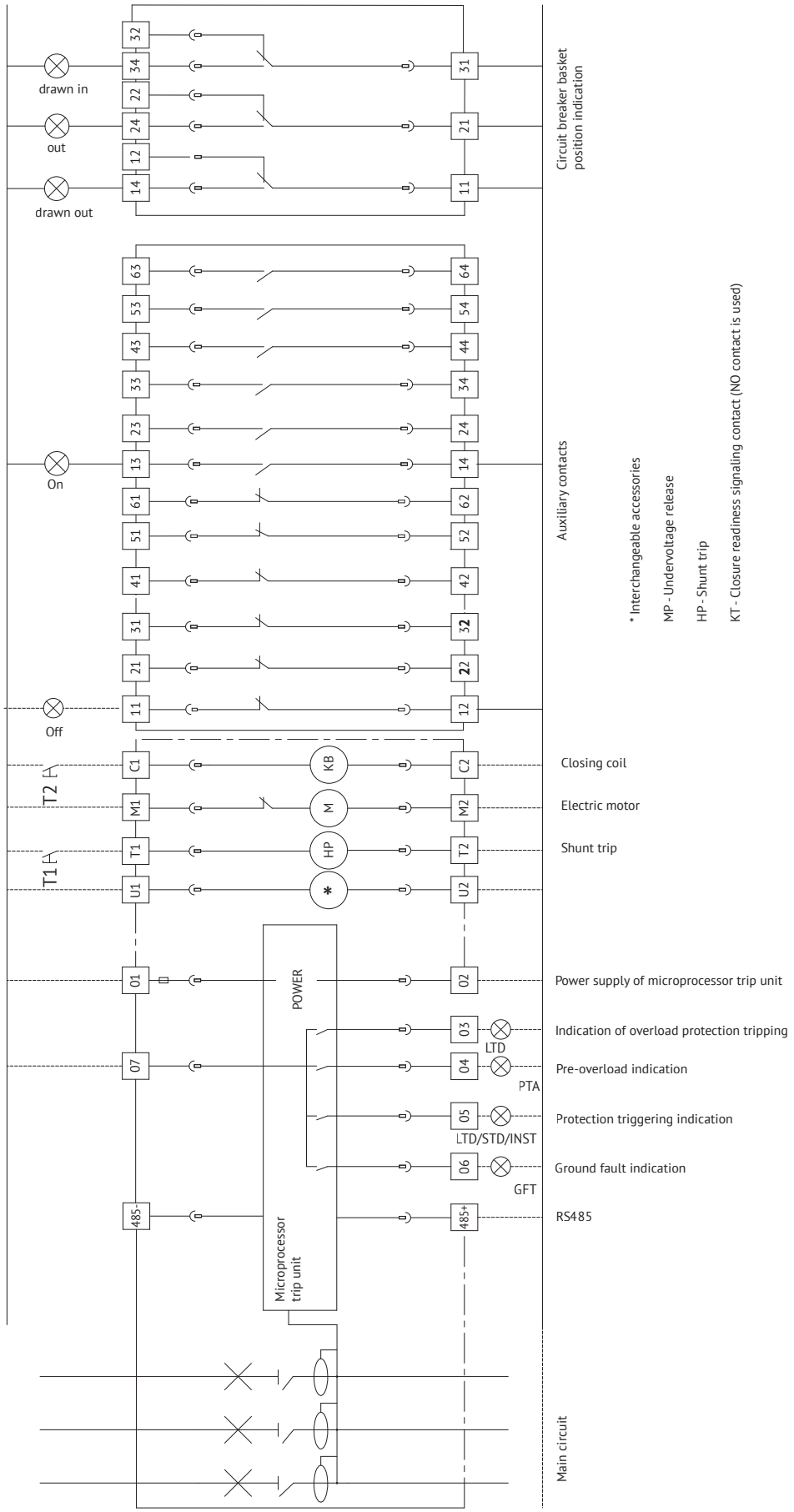

The dotted line indicates the connections made by the consumer.

Electrical schematic diagram of circuit breaker with semiconductor release MR8.1 type of S2, S4, S6 dimension version

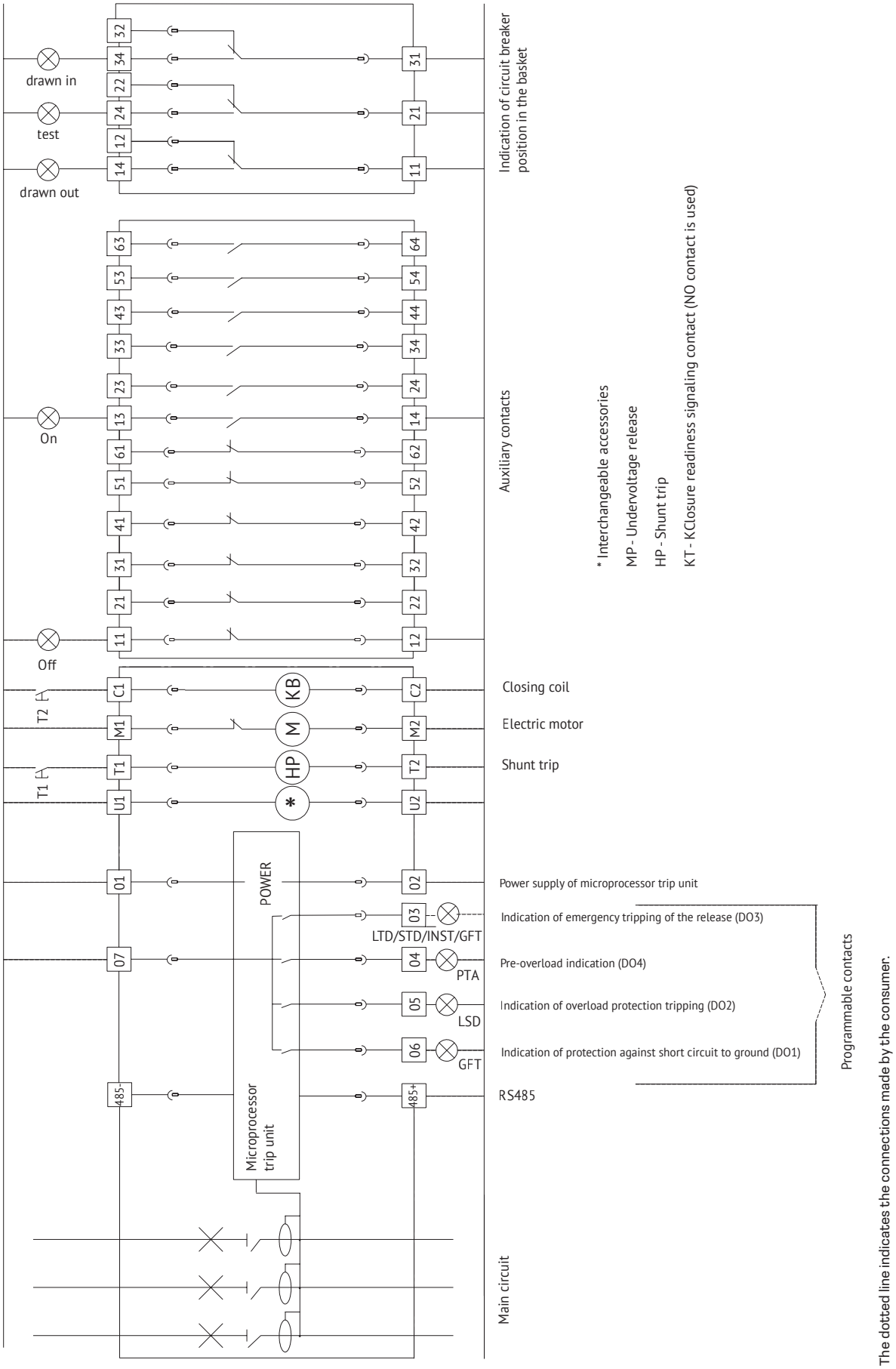

Overall, mounting and connection dimensions (mm)

Fixed OptiMat A-630-1600-S1-3P circuit breaker for rated currents of 630 – 1600 A with rear horizontal terminal location

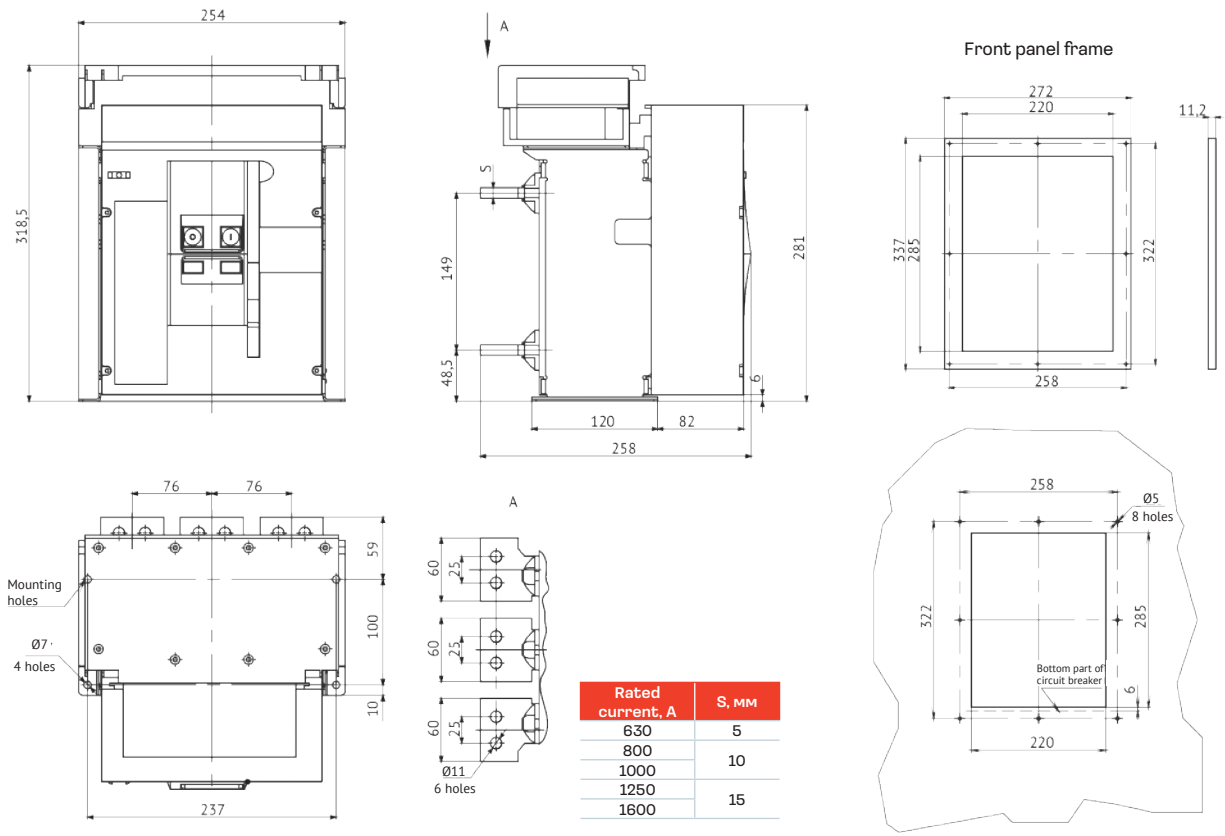

Rated current, A	S, мм
630	5
800	10
1000	
1250	15
1600	

Fixed OptiMat A-1600-S1-3P circuit breaker for rated current of 1600 A with rear horizontal terminal location with pole expanders installed

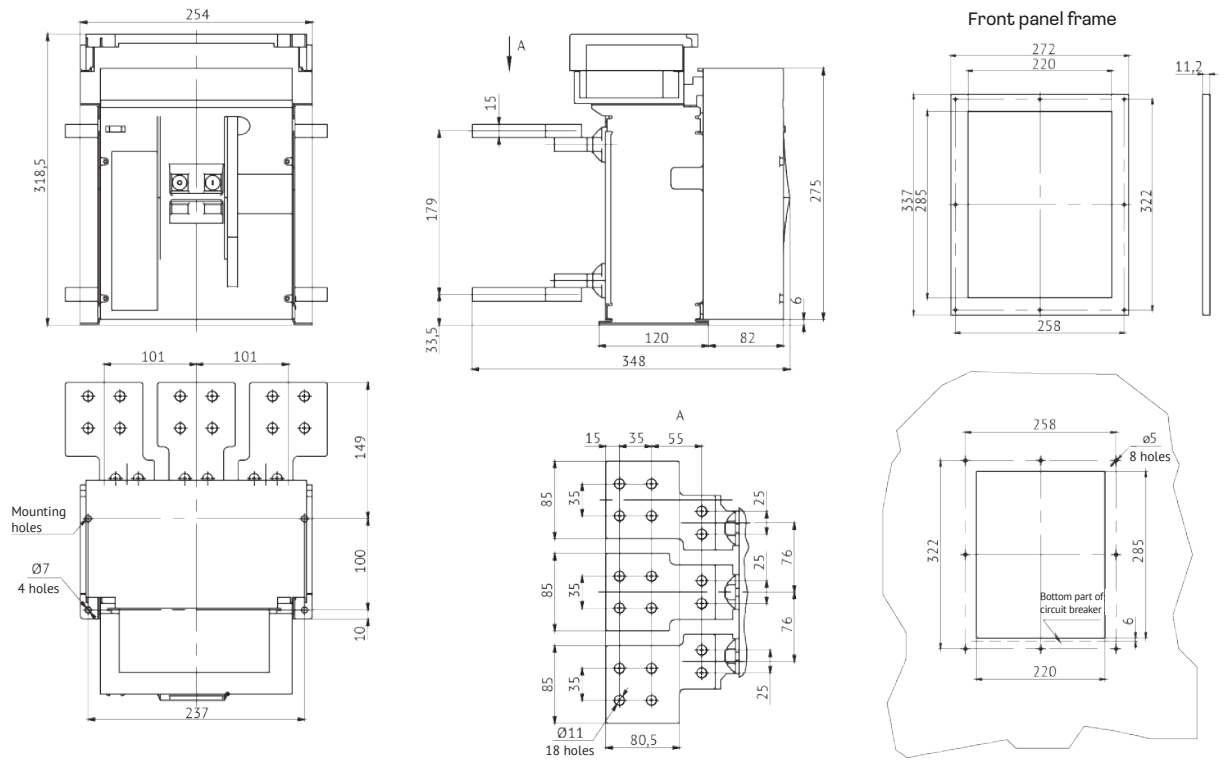

Fixed OptiMat A-630-1600-S1-3P circuit breaker for rated currents of 630 – 1600 A with rear vertical terminal location

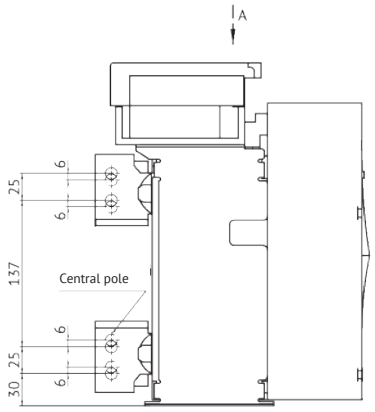

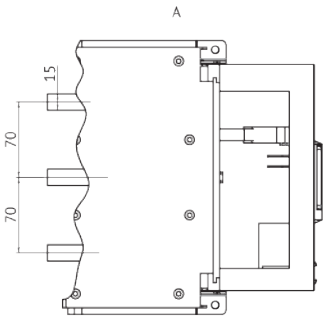

Front panel frame

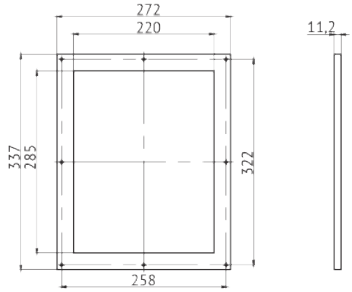

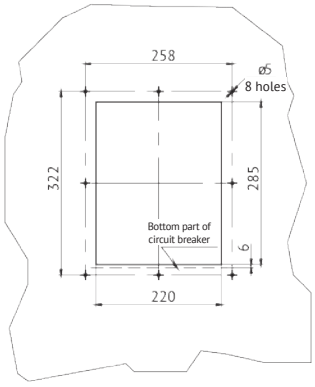

Rated current, A	S, мм
630	5
800	10
1000	
1250	15
1600	

Fixed OptiMat A-630-1600-S2-3P circuit breaker for rated currents of 630–1600 A with rear vertical and horizontal terminal location

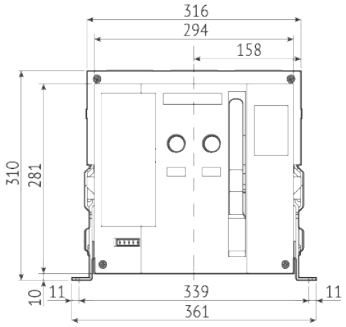

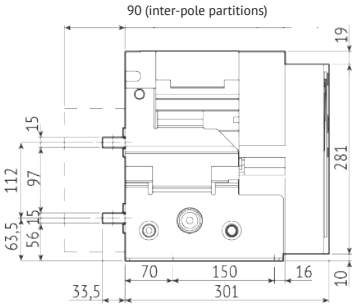

Front panel frame

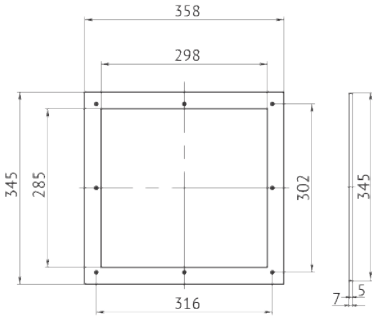

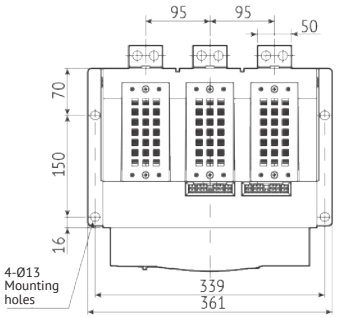

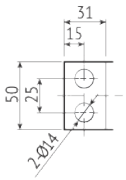

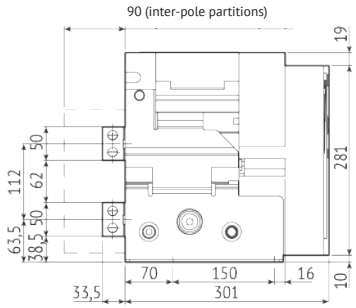

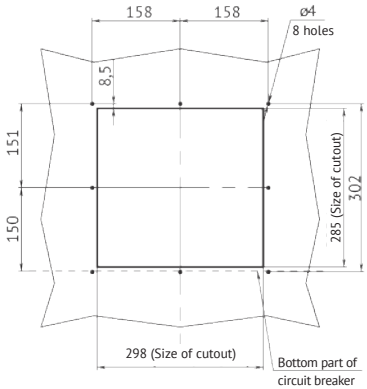

OptiMat A-630-1600-S2-4P circuit breaker of fixed version for rated currents of 630-1600 A with rear vertical and horizontal terminal location

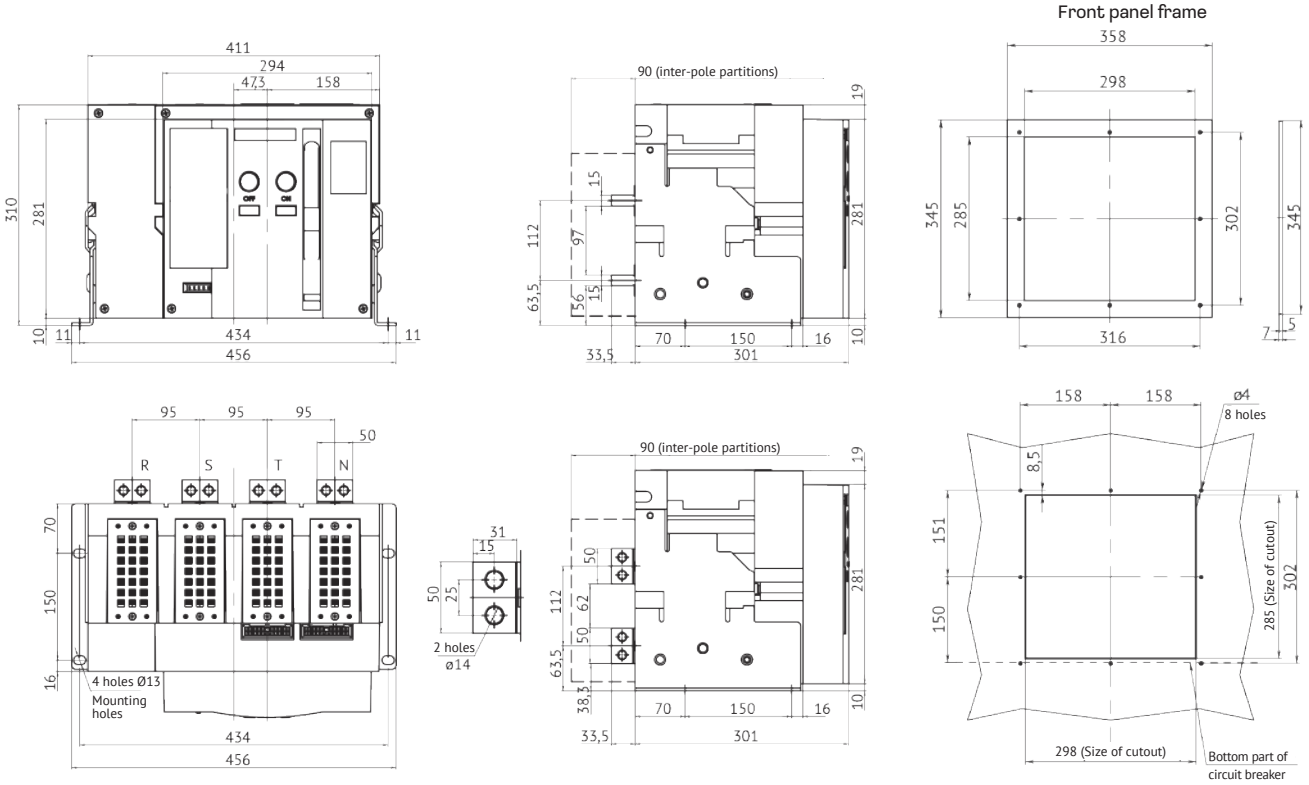

Fixed OptiMat A-2000-S2-3P circuit breaker for rated current of 2000 A with rear vertical terminal location

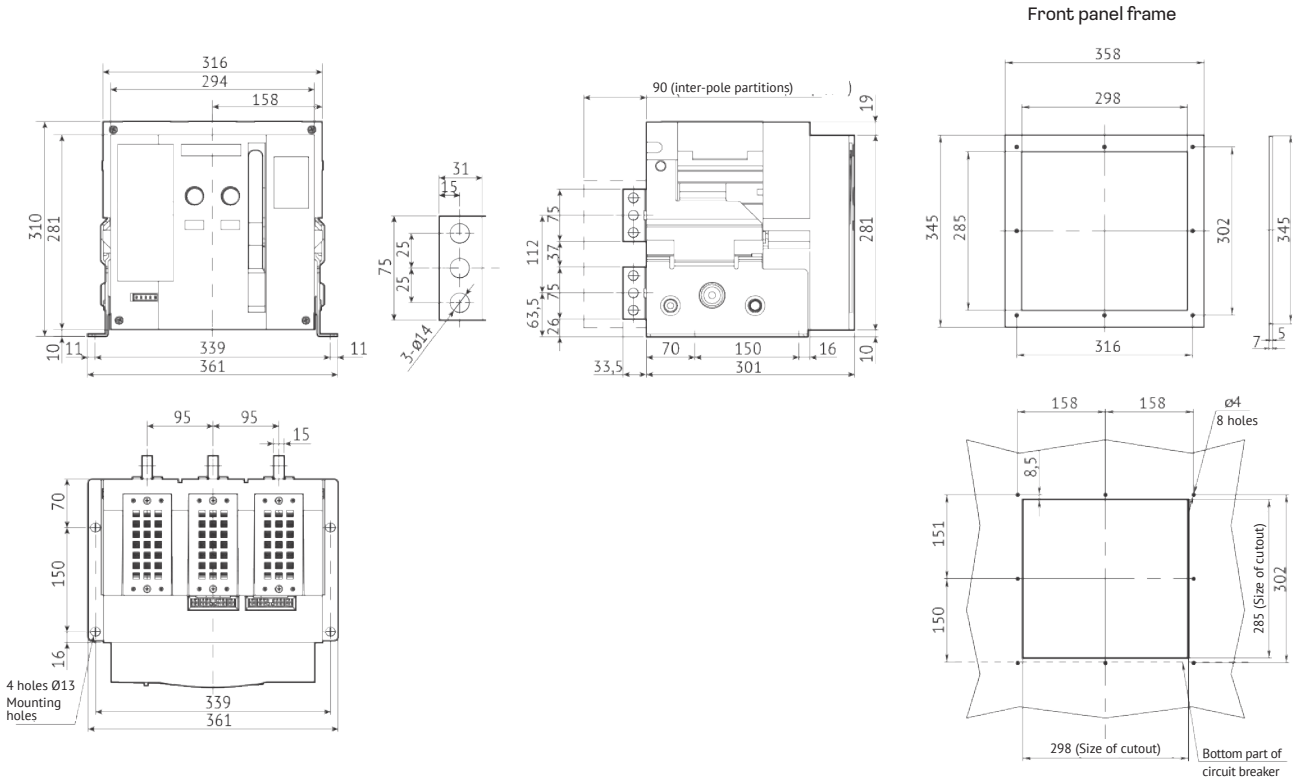

OptiMat A-2000-S2-4P circuit breaker of fixed version for rated current of 2000 A with rear vertical and horizontal terminal location

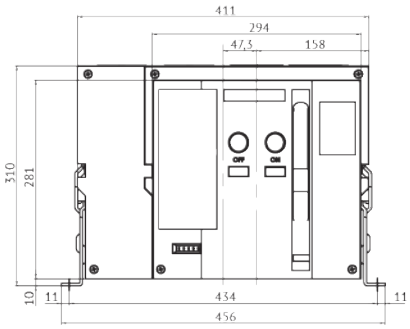

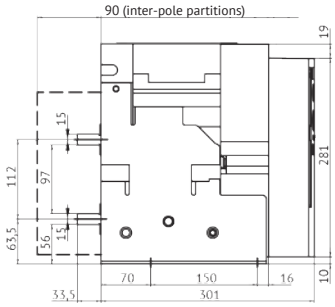

Front panel frame

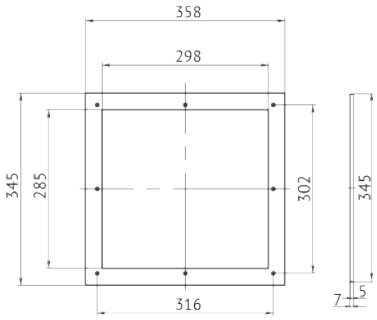

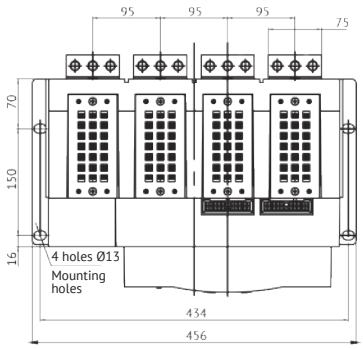

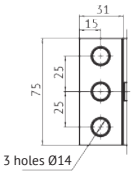

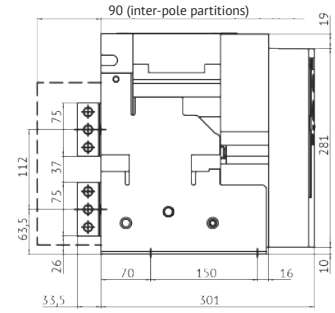

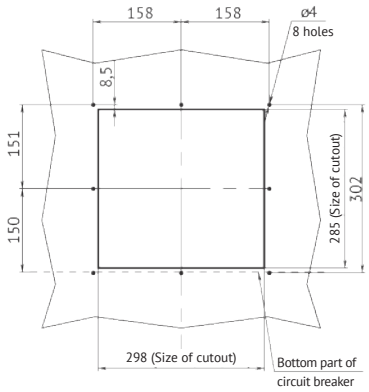

Fixed OptiMat A-630-2000-S2-3P circuit breaker for rated currents of 630–2000 A with front terminal location

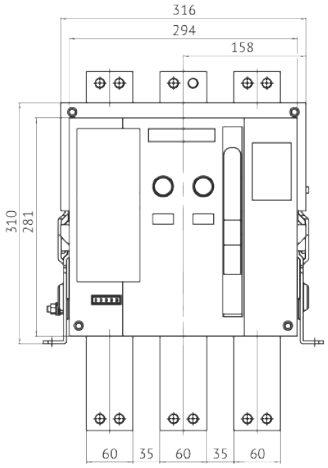

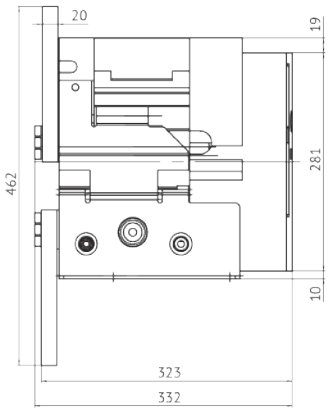

Front panel frame

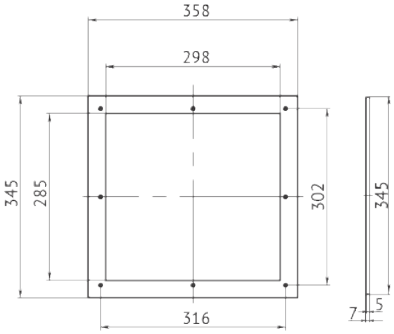

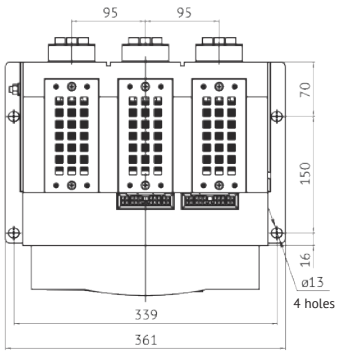

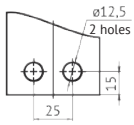

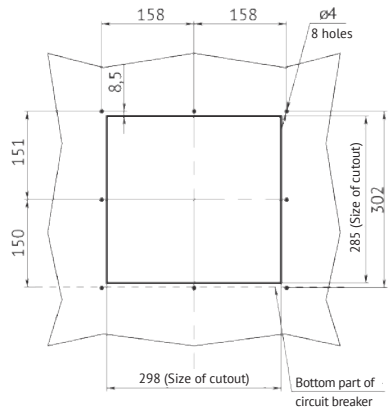

Fixed OptiMat A-2500-3200-S4-3P circuit breaker for rated currents of 2500-3200 A with rear horizontal and vertical terminal location

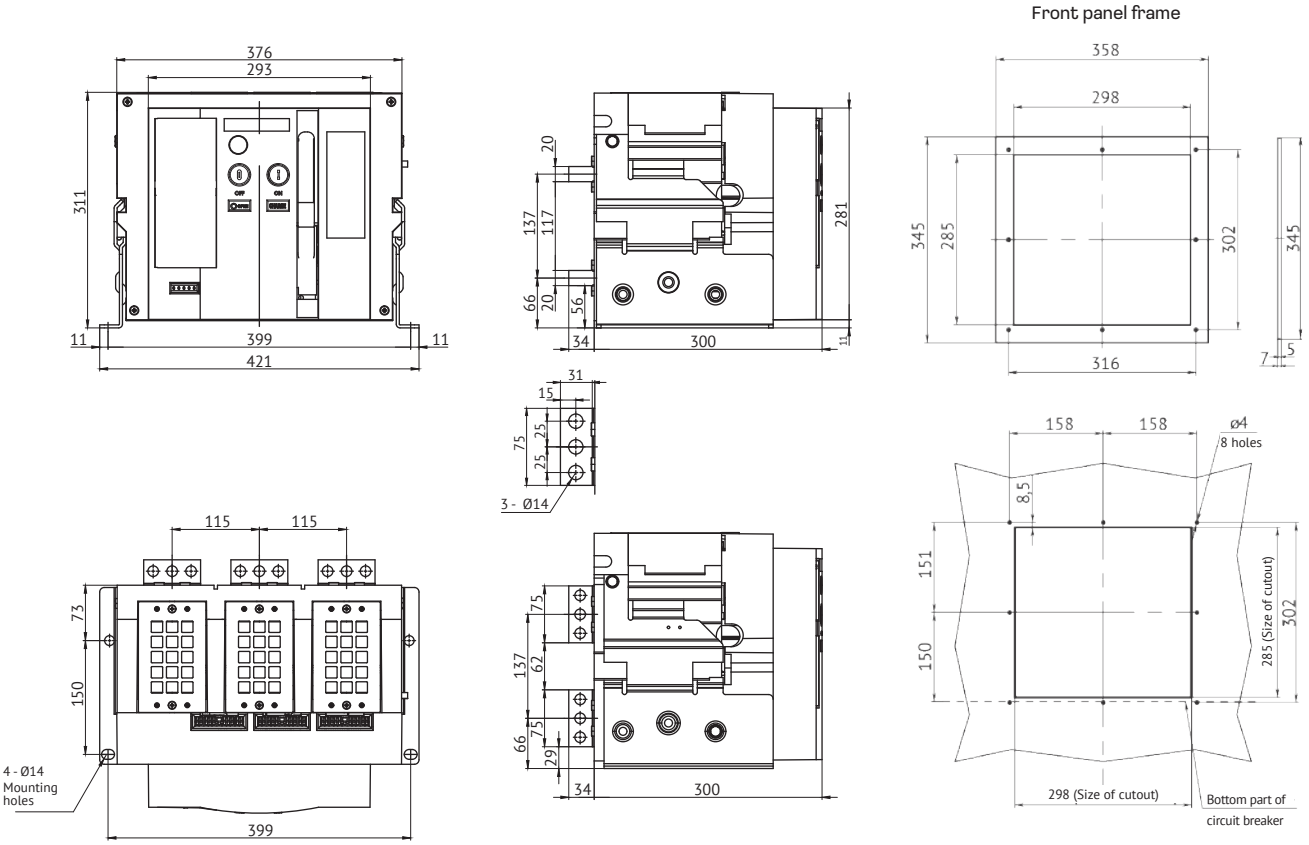

Fixed OptiMat A-2500-3200-S4-4P circuit breaker for rated currents of 2500-3200 A with rear horizontal and vertical terminal location

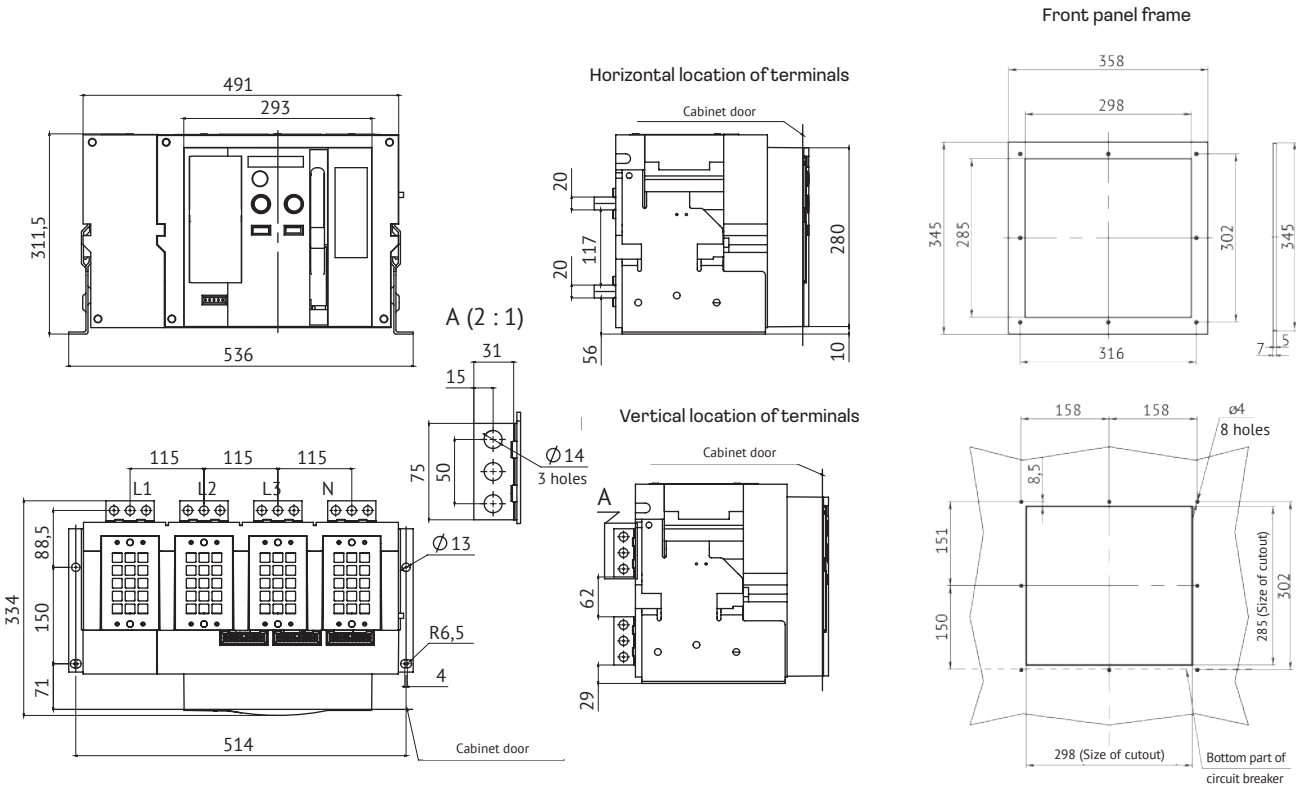

Fixed OptiMat A-2500-S4-3P circuit breaker for rated current of 2500 A with front terminal location

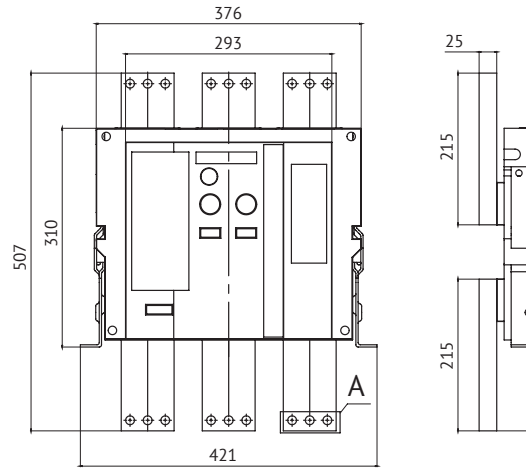

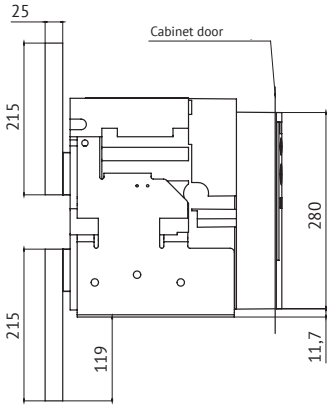

Front panel frame

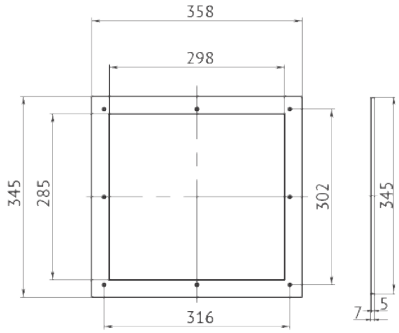

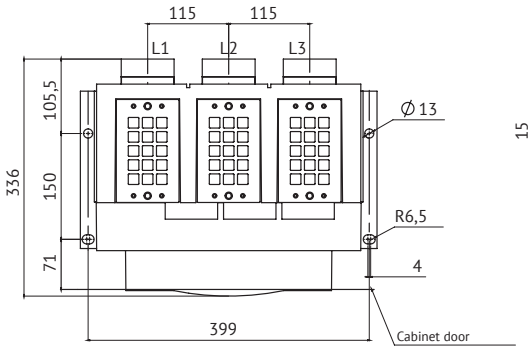

A (2 : 1)

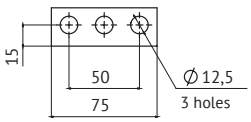

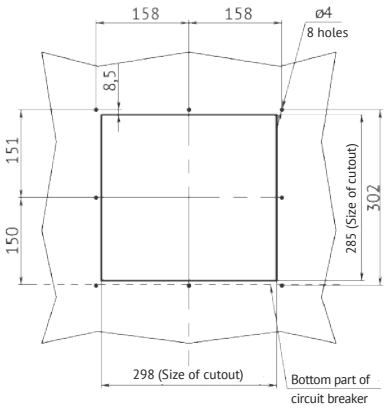

Fixed OptiMat A-2500-S4-4P circuit breaker for rated current of 2500 A with front terminal location

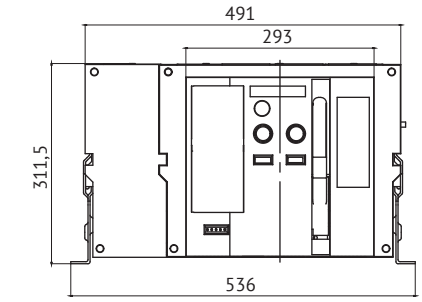

Horizontal location of terminals

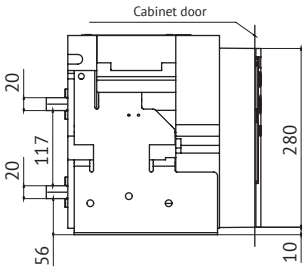

Front panel frame

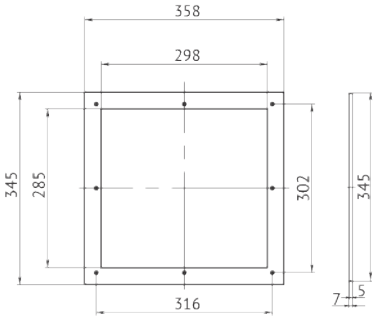

A (2 : 1)

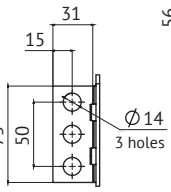

Vertical location of terminals

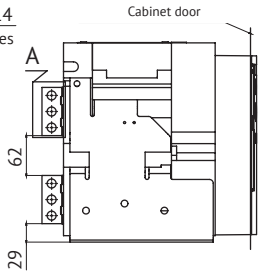

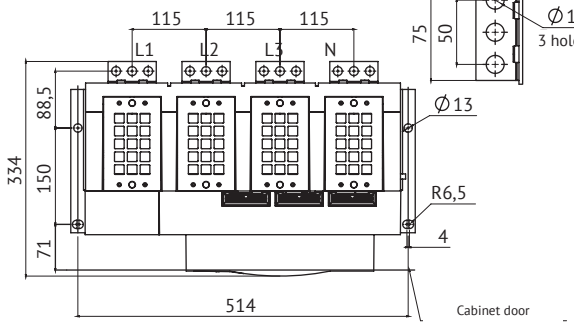

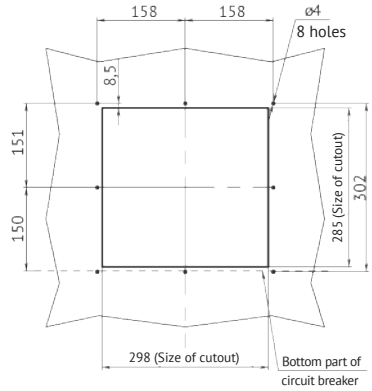

Fixed OptiMat A-4000-S4-3P circuit breaker for rated current of 4000 A with rear vertical terminal location

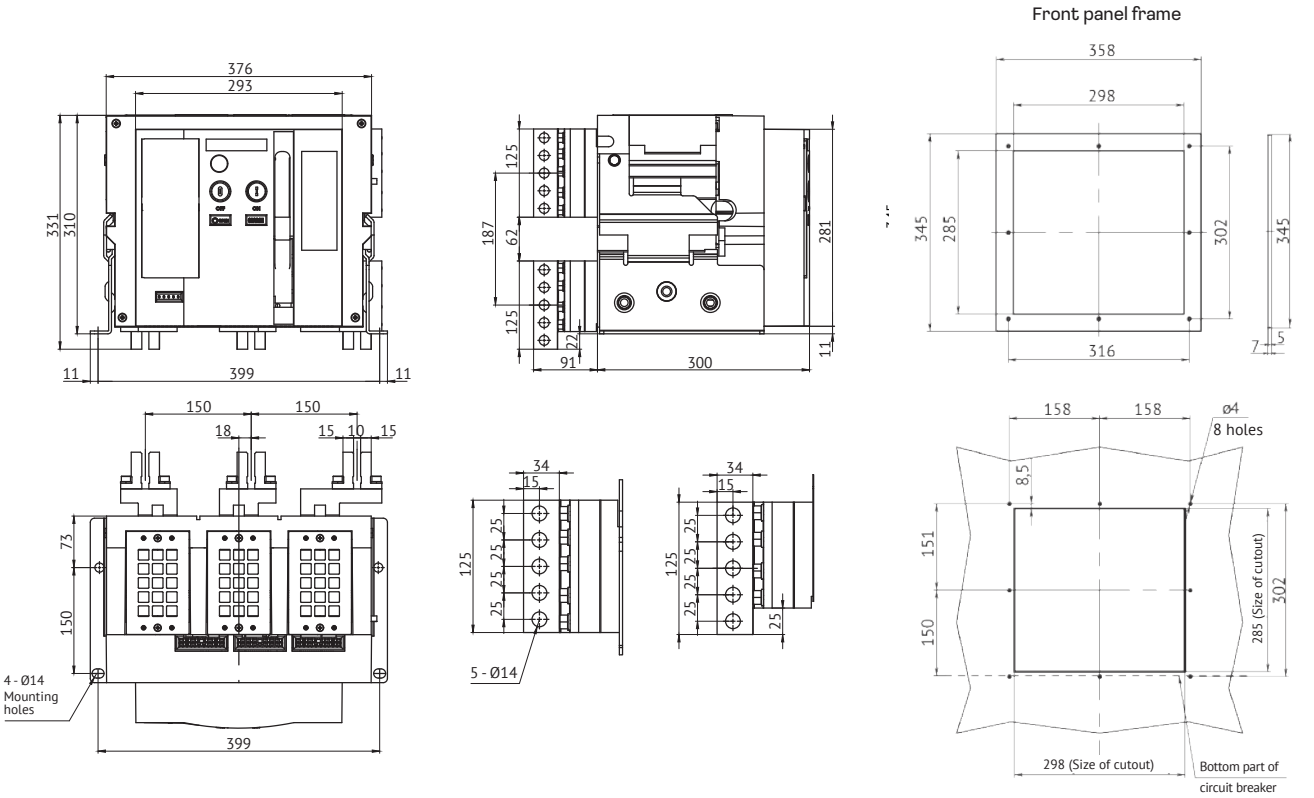

Fixed OptiMat A-4000-S4-3P circuit breaker for rated current of 4000 A with rear vertical terminal location

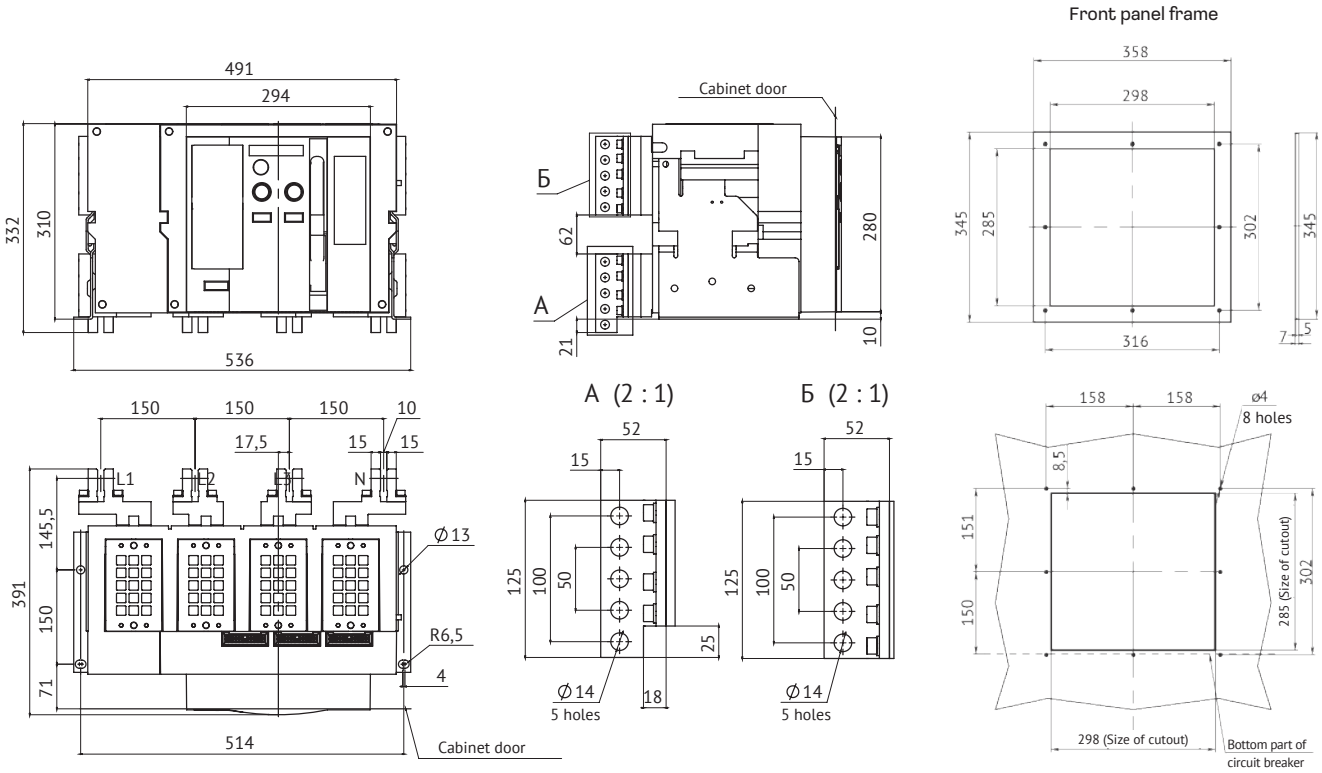

Fixed OptiMat A-5000-S6-3P-150kA circuit breaker for rated current of 5000 A, LSC 150 kA with rear vertical and horizontal terminal location

Front panel frame

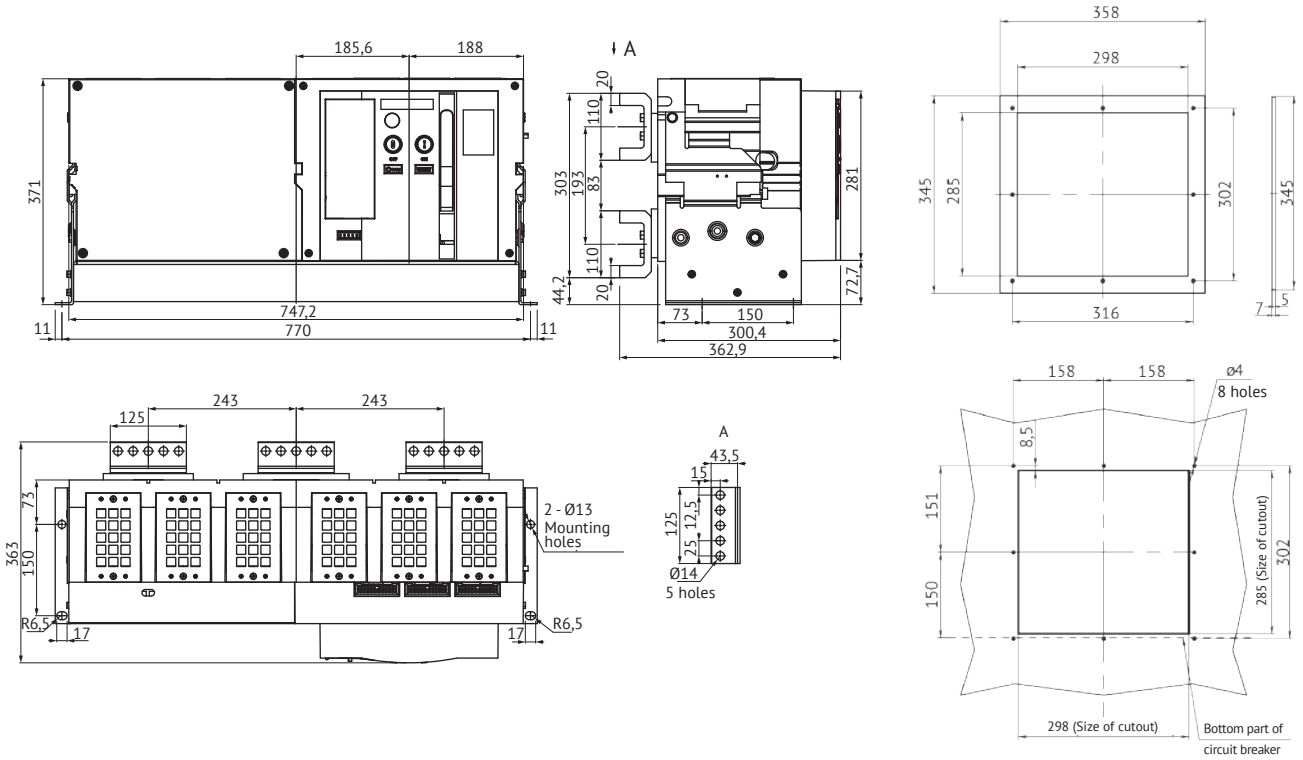

Front panel frame

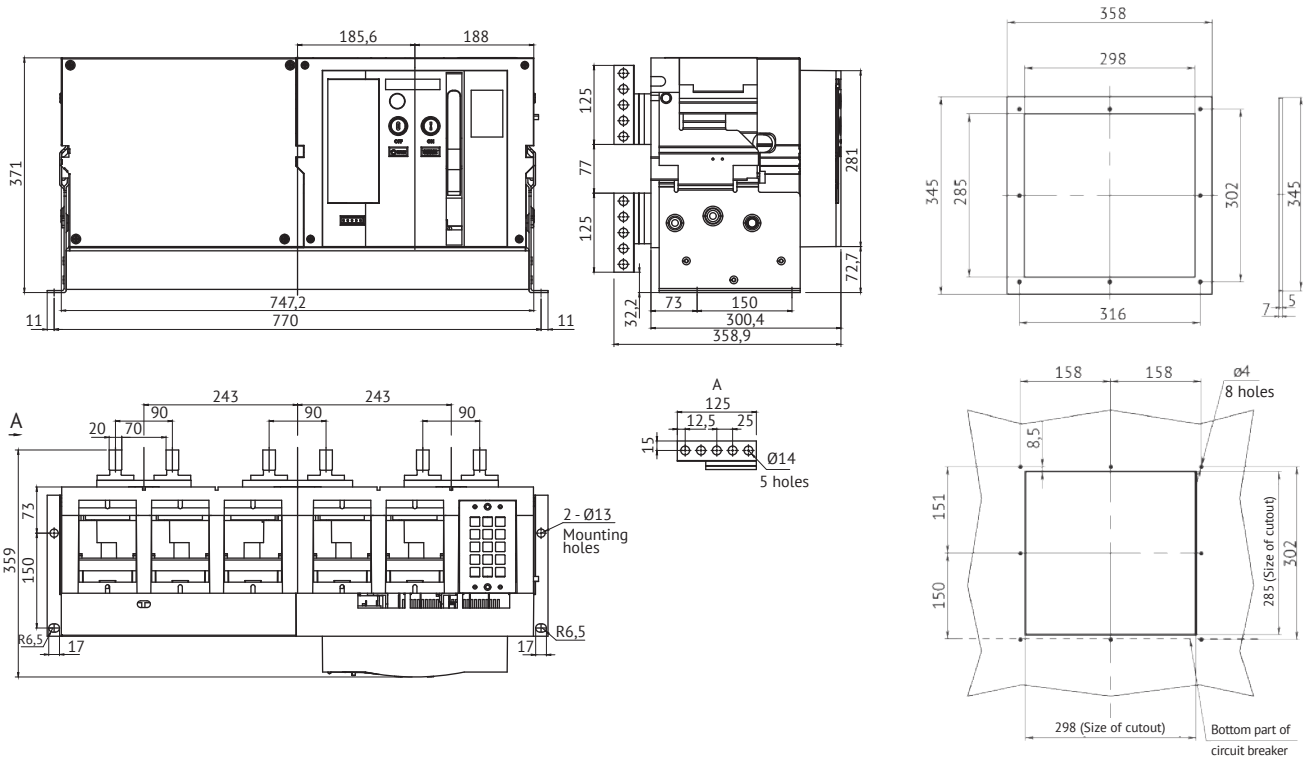

Fixed OptiMat A-5000-S6-4P-150kA circuit breaker for rated current of 5000 A, LSC 150 kA with rear vertical and horizontal terminal location

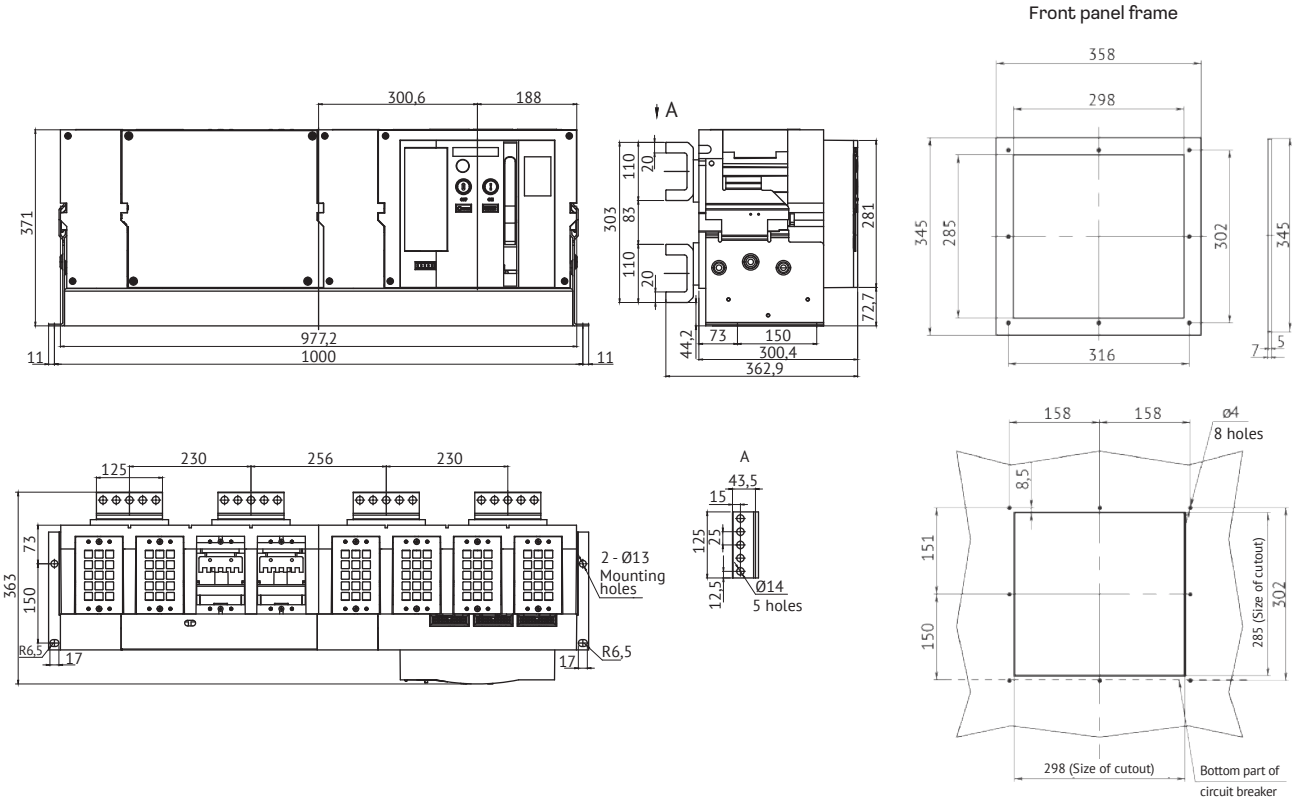

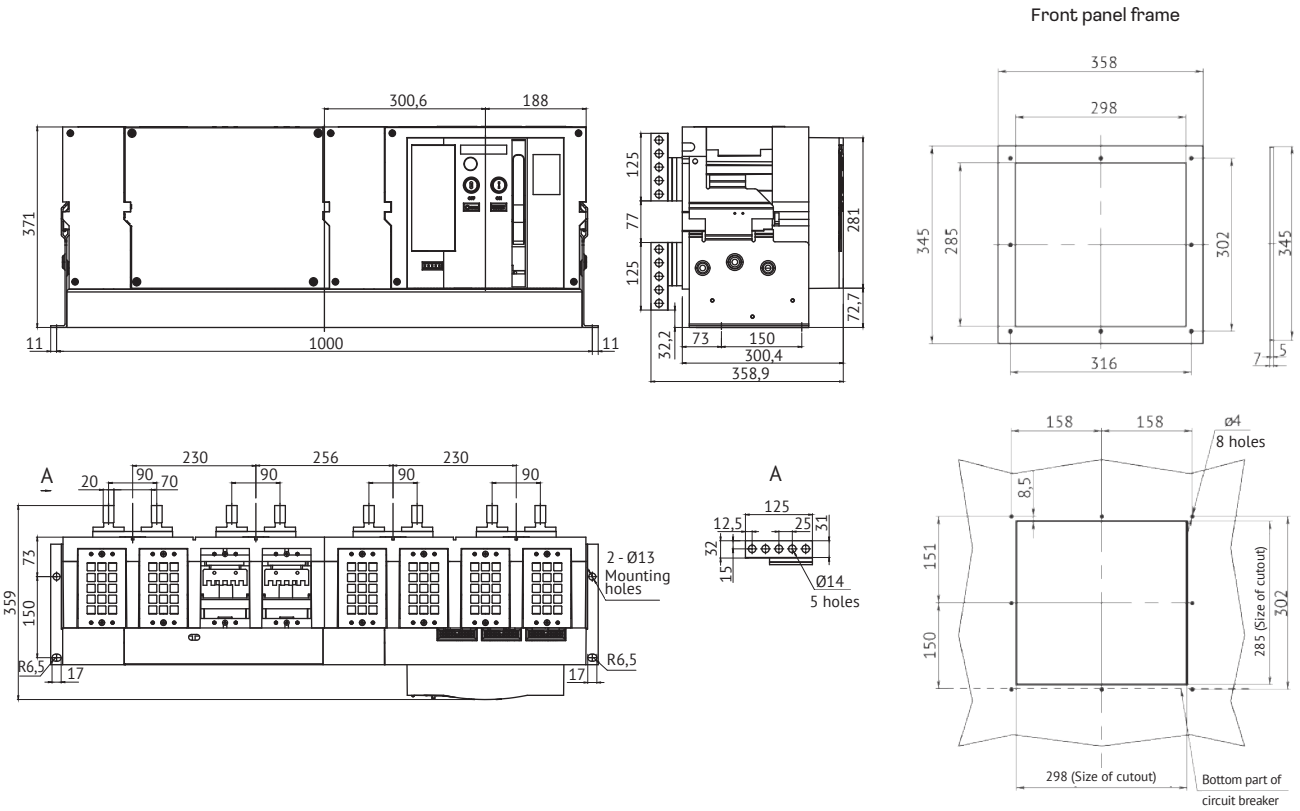

OptiMat A-6300-S6-3P-150kA circuit breaker of fixed version for rated current of 6300 A, LSC 150 kA with rear vertical and horizontal terminal location

Front panel frame

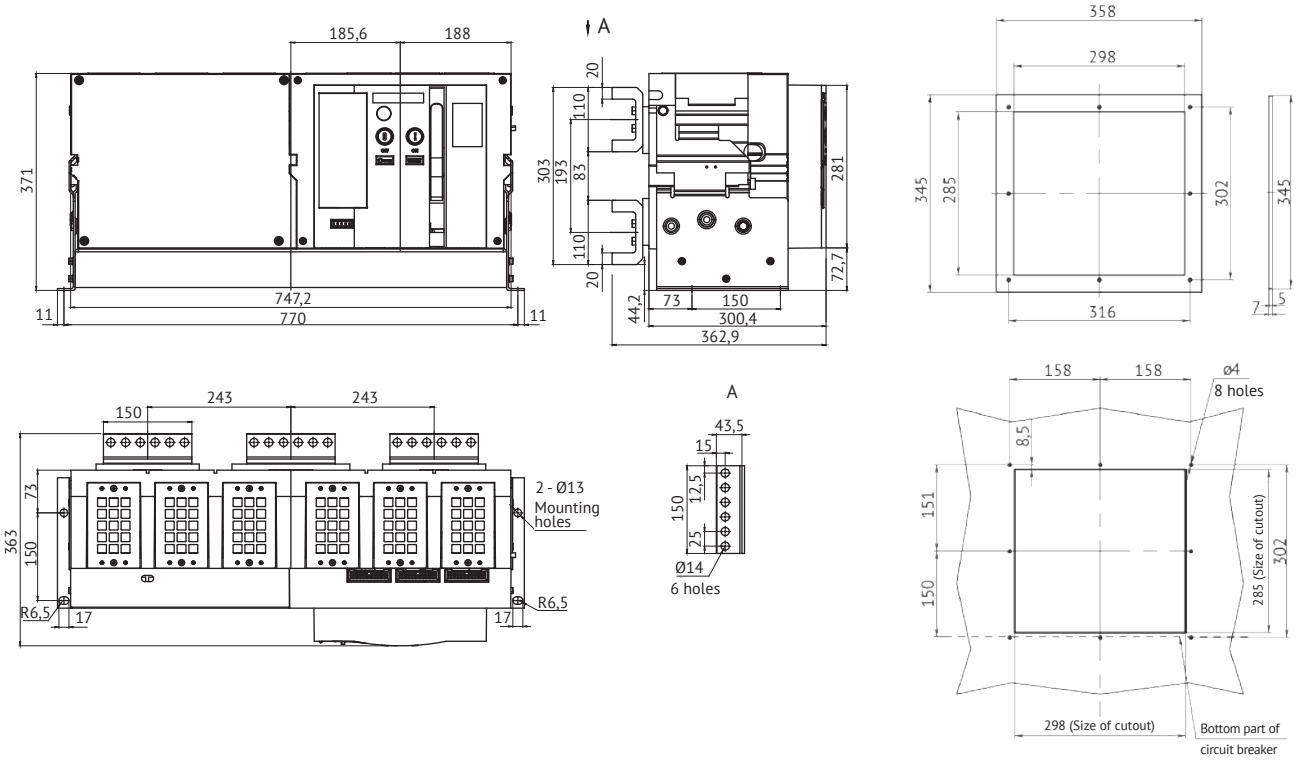

Front panel frame

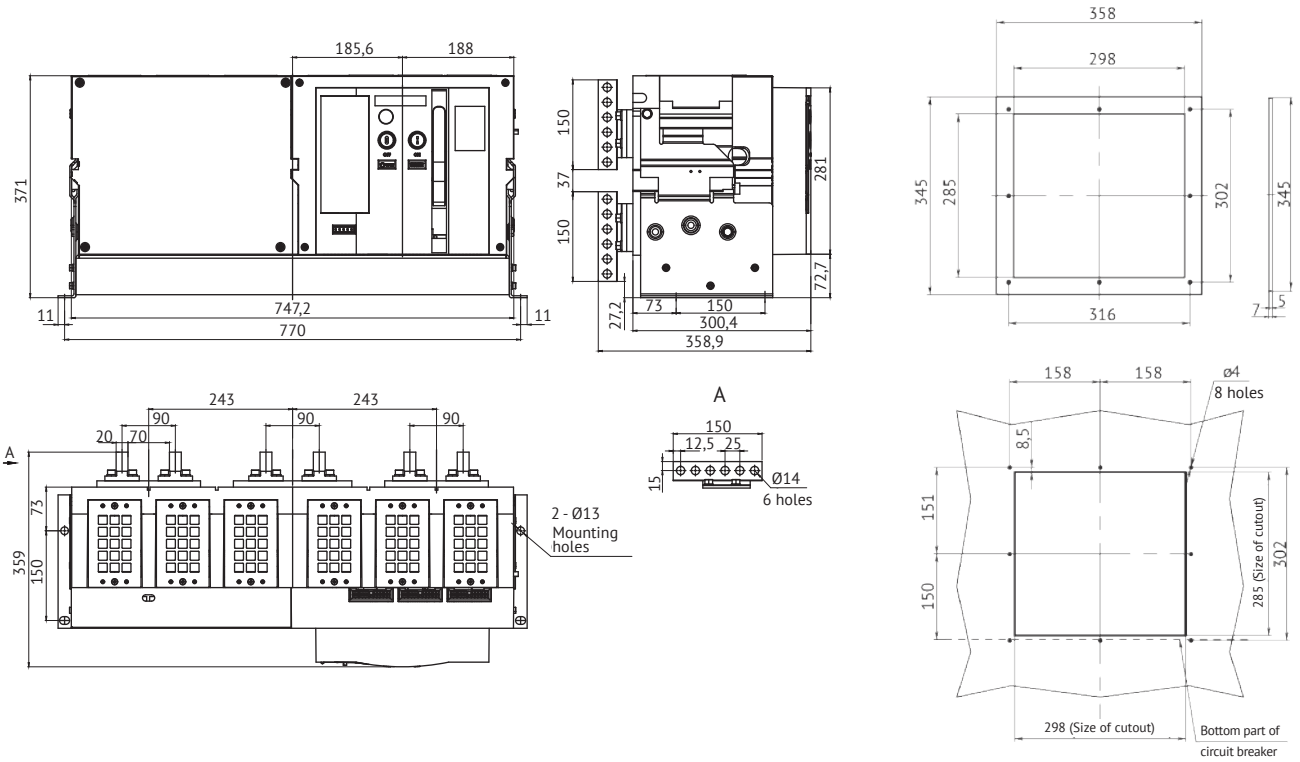

OptiMat A-6300-S6-4P-150kA circuit breaker of fixed version for rated current of 6300 A, LSC 150 kA with rear vertical and horizontal terminal location

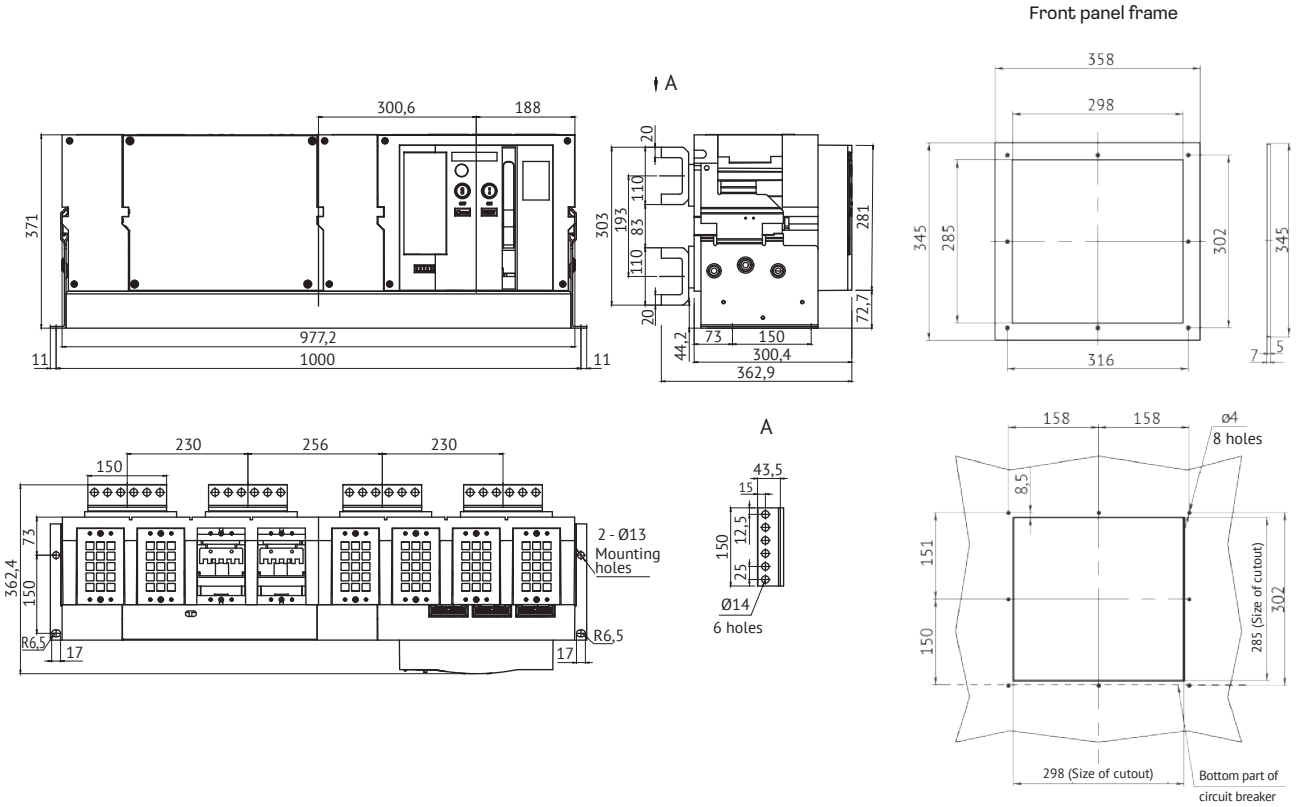

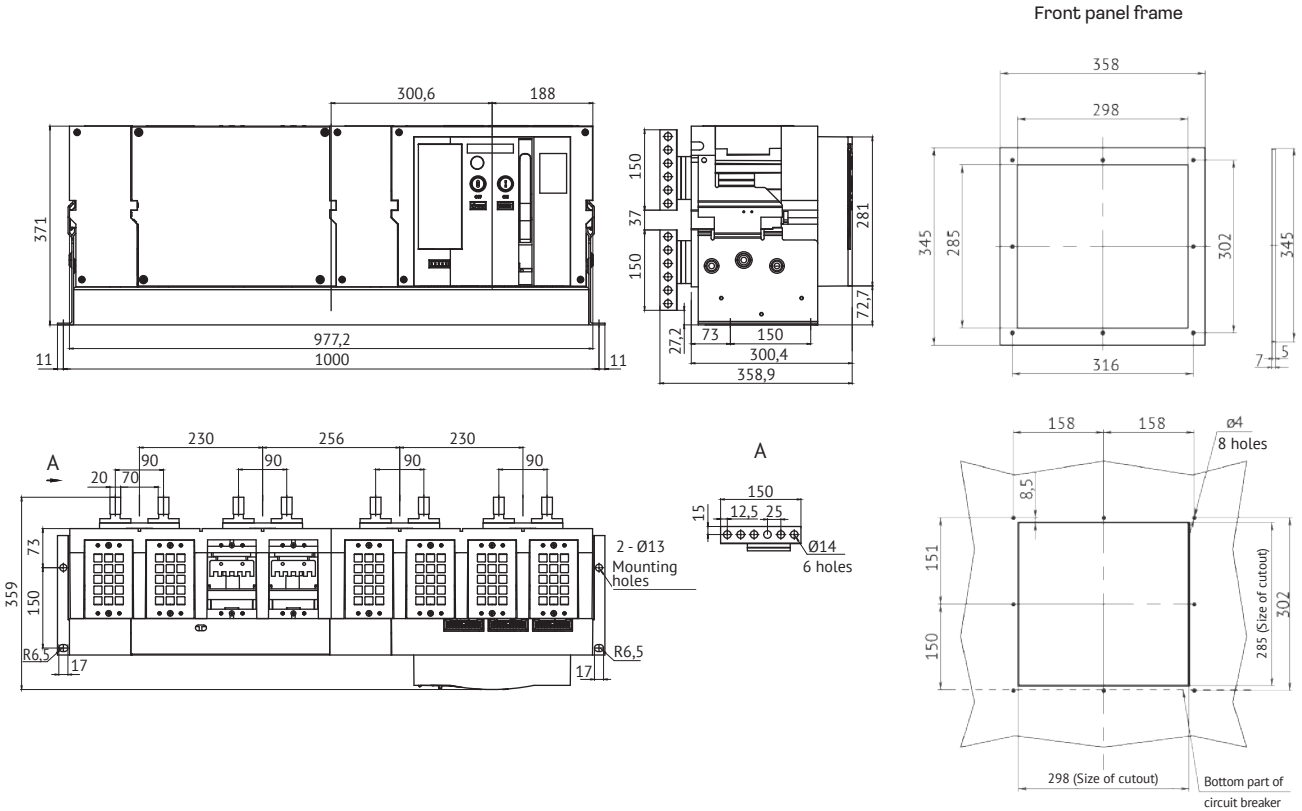

OptiMat A-630-1600-S1-3P circuit breaker of withdrawable design for rated currents of 630-1600 A with rear horizontal terminal location

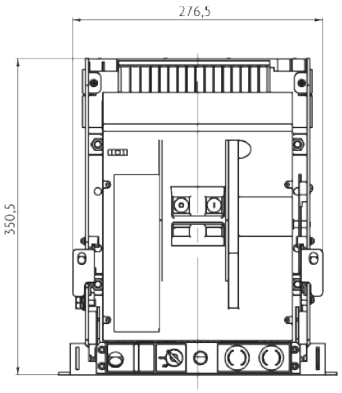

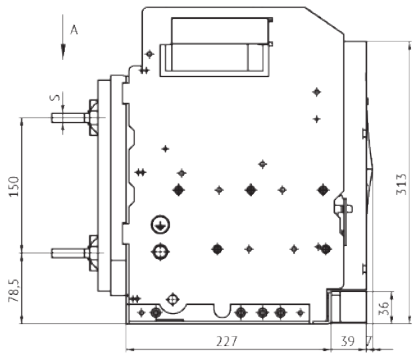

Front panel frame

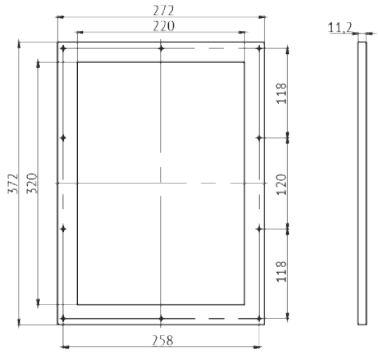

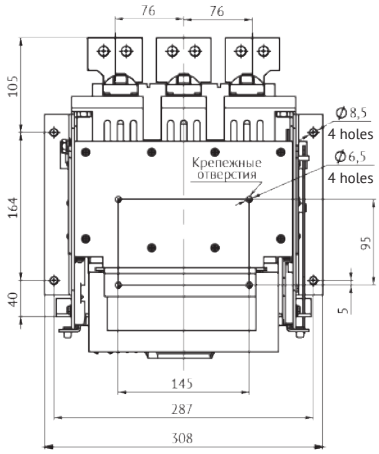

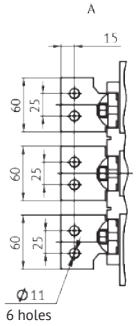

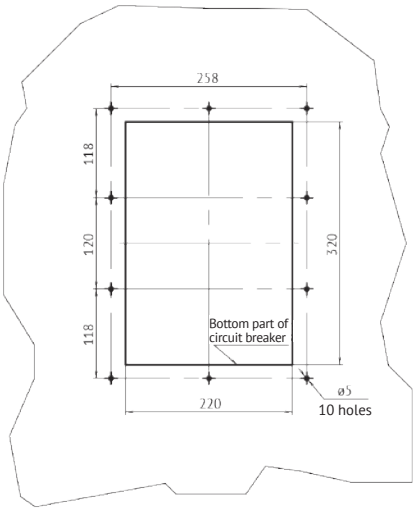

Rated current, A	S, мм
630	5
800	10
1000	
1250	15
1600	

with rear vertical terminal location

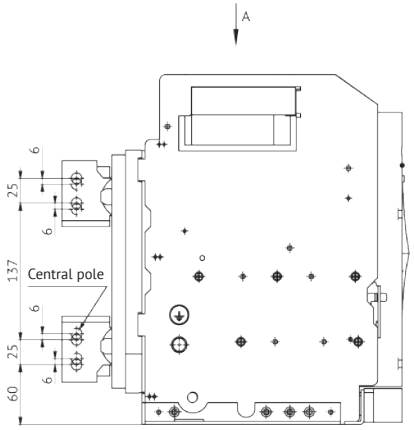

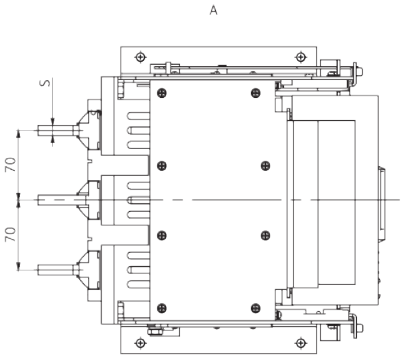

OptiMat A-1600-S1-3P circuit breaker of withdrawable design for rated current 1600 A with rear horizontal terminal location with poles expanders installed

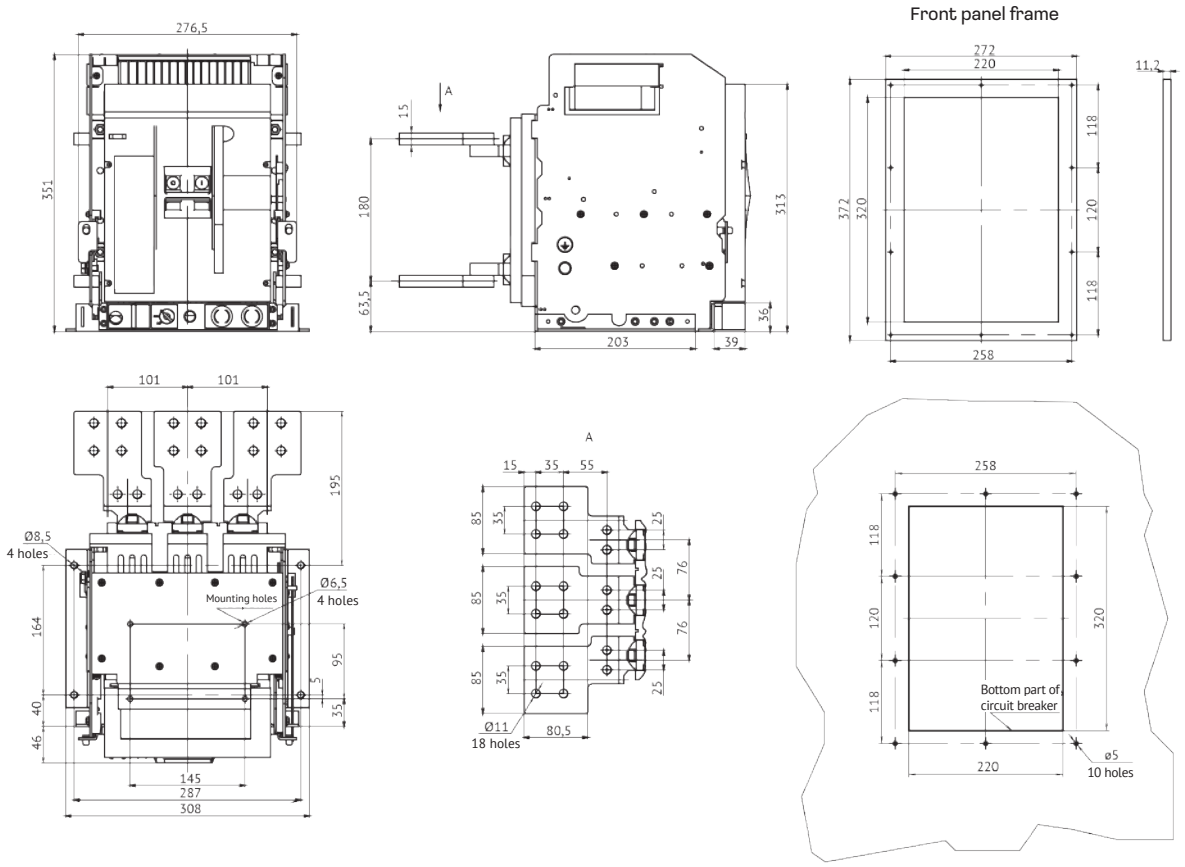

Withdrawable OptiMat A-630-1600-S2-3P circuit breaker for rated currents of 630–1600 A with rear vertical and horizontal terminal location

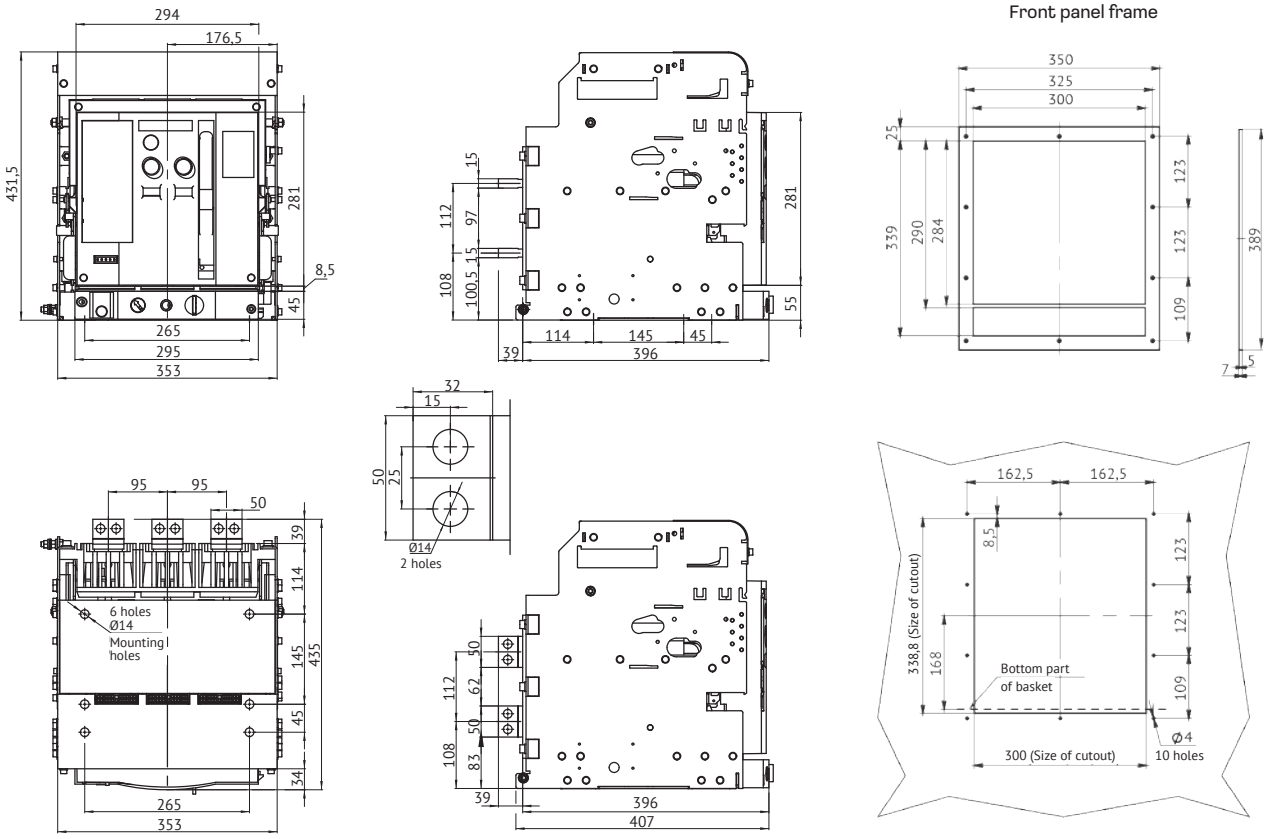

OptiMat A-630-1600-S2-4P circuit breaker of withdrawable design for rated currents of 630-1600 A with rear vertical and horizontal terminal location

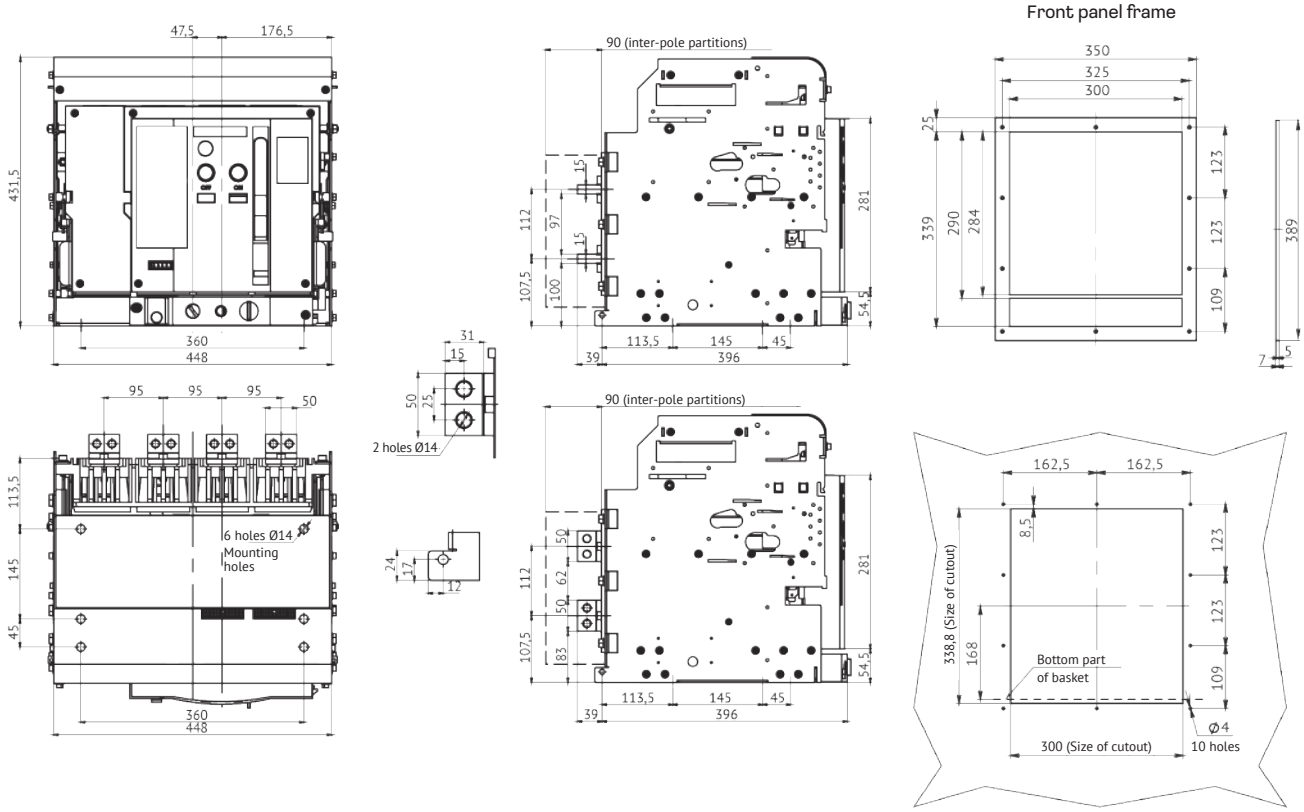

Withdrawable OptiMat A-2000-S2-3P circuit breaker for rated current of 2000 A with rear vertical terminal location

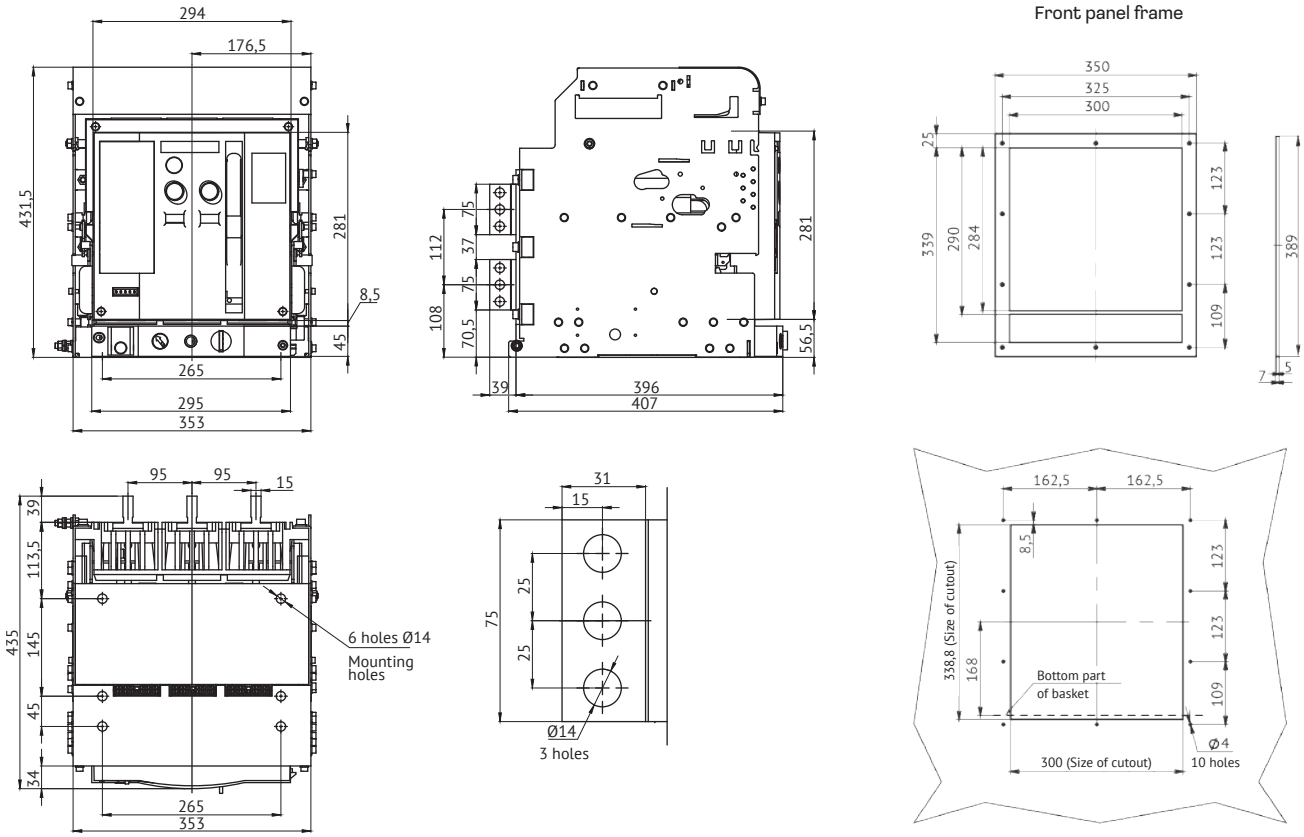

Withdrawable OptiMat A-2000-S2-4P circuit breaker for rated current of 2000 A with rear vertical terminal location

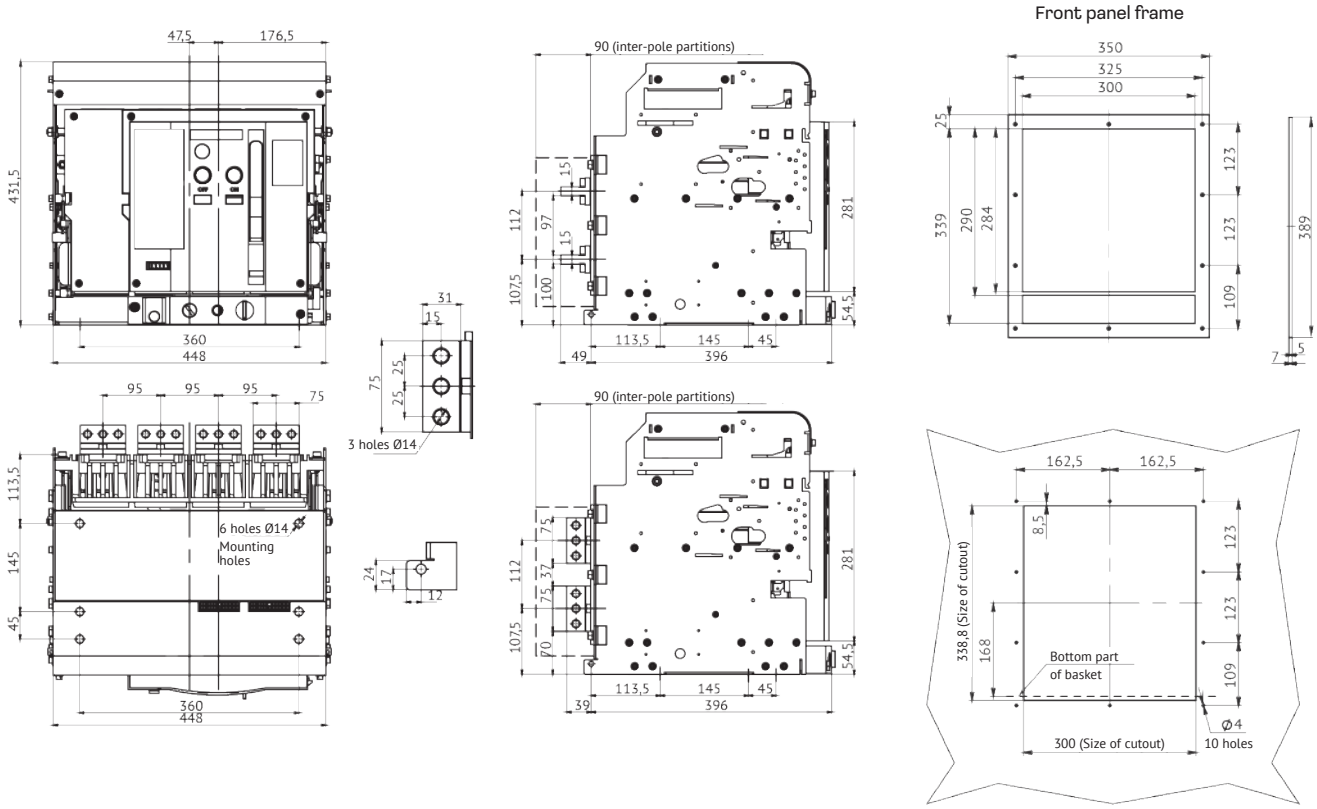

Withdrawable OptiMat A-630-2000-S2-3P circuit breaker for rated currents of 630–2000 A with front terminal location

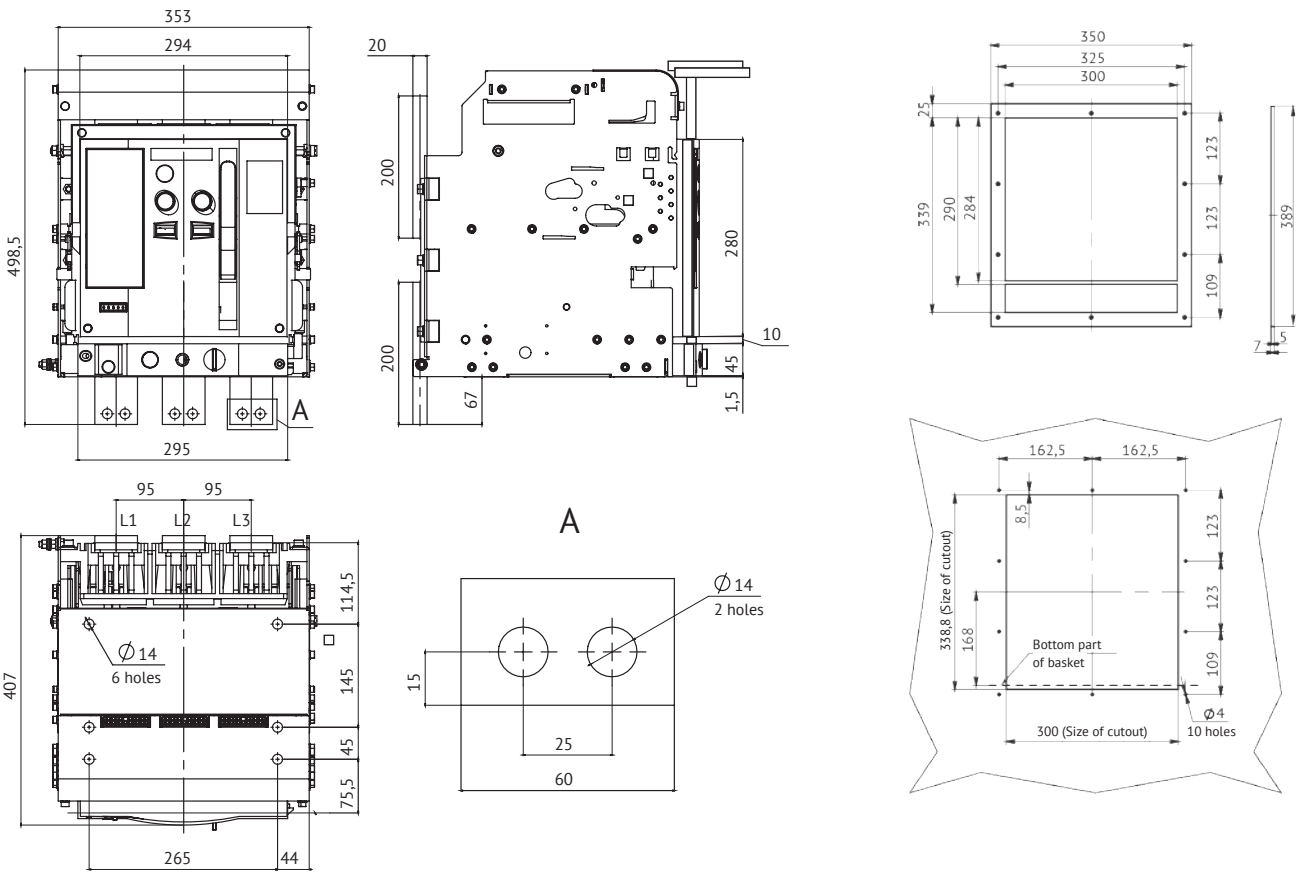

Withdrawable OptiMat A-630-2000-S2-4P circuit breaker for rated currents of 630–2000 A with front terminal location

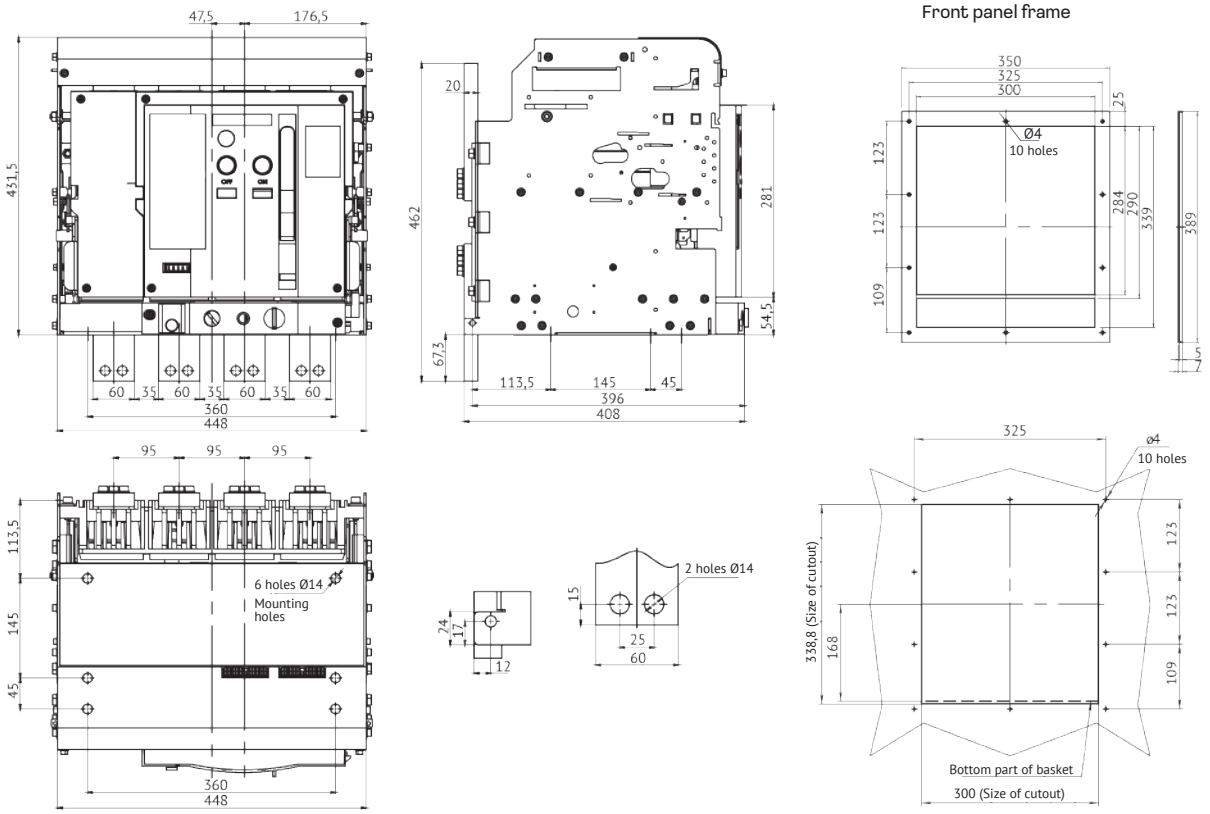

Withdrawable OptiMat A-2500-3200-S4-3P circuit breaker for rated currents of 2500-3200 A with rear horizontal and vertical terminal location

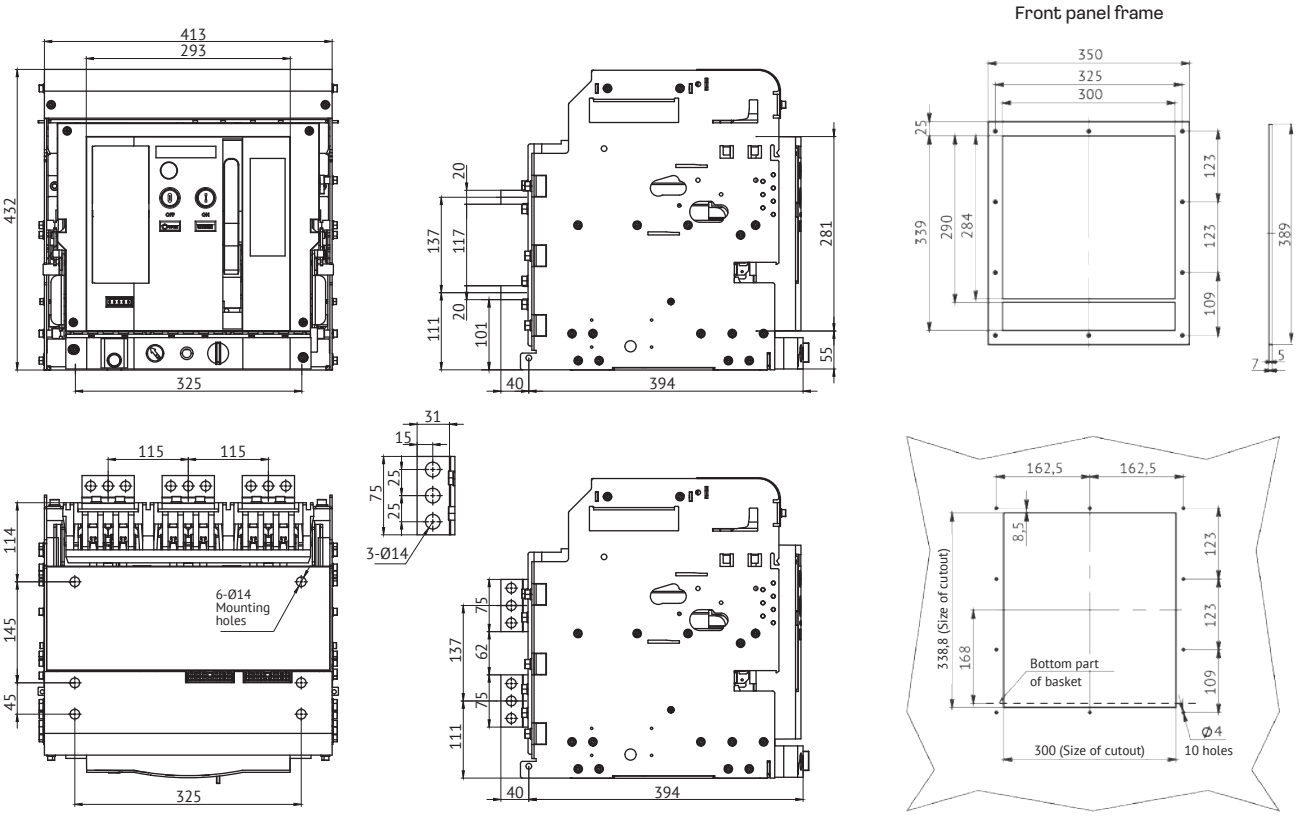

Withdrawable OptiMat A-2500-3200-S4-4P circuit breaker for rated currents of 2500-3200 A with rear horizontal and vertical terminal location

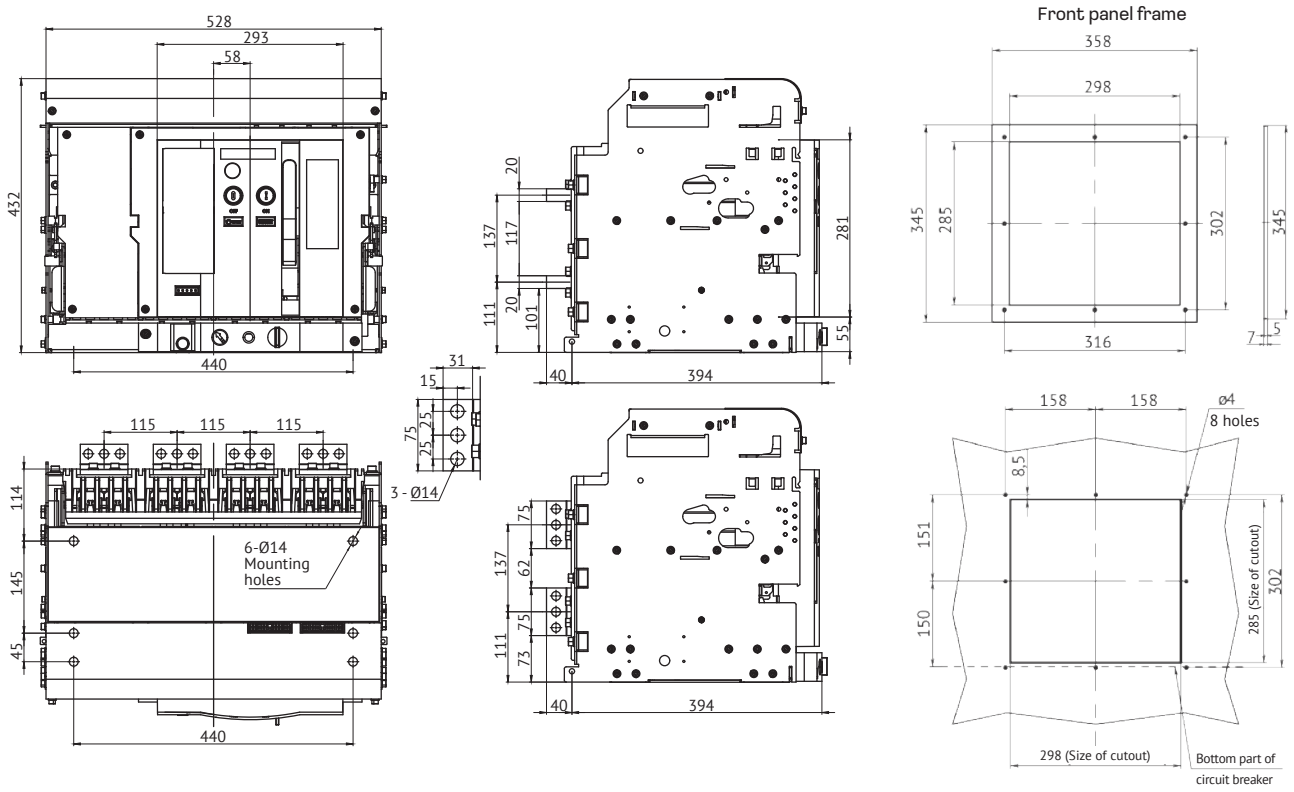

Withdrawable OptiMat A-2500-S4-3P circuit breaker for rated current of 2500 A with front terminal location

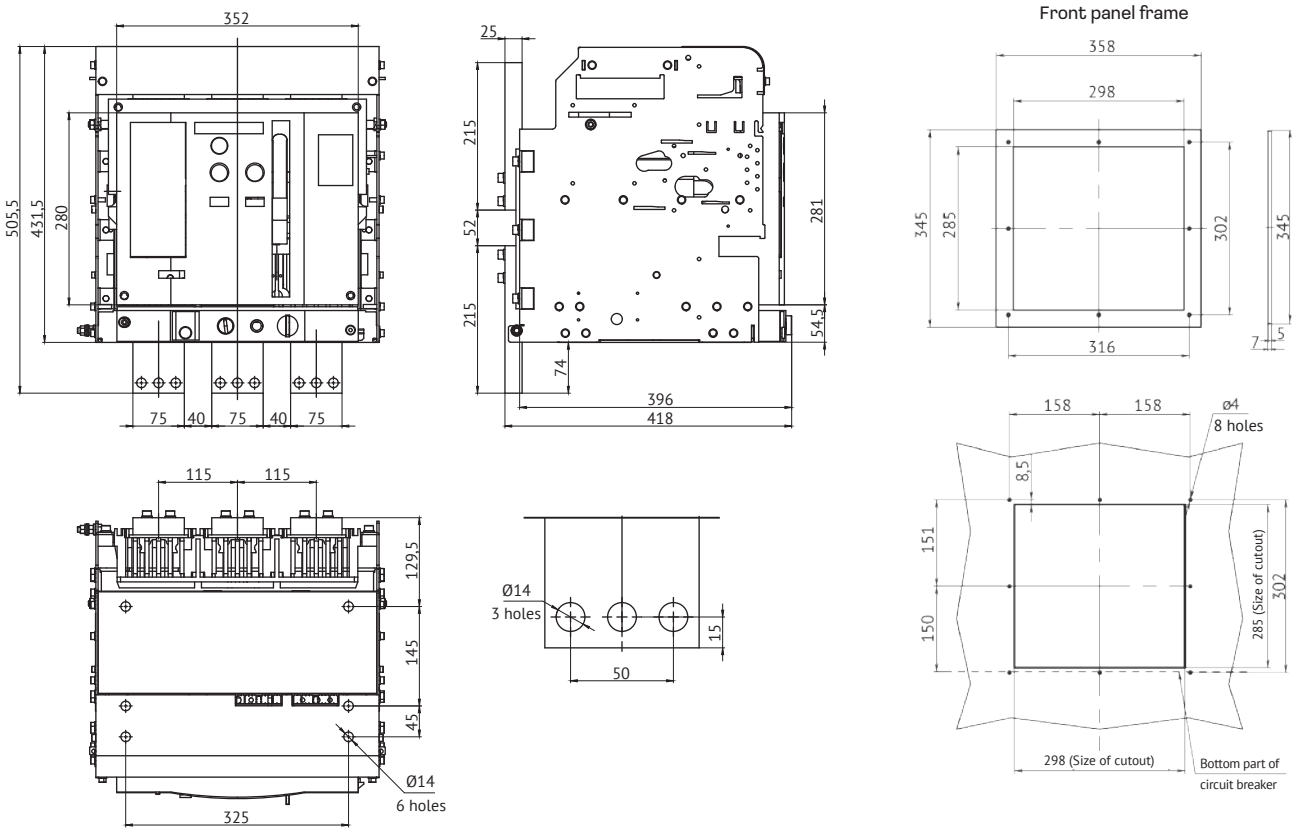

Withdrawable OptiMat A-2500-S4-4P circuit breaker for rated current of 2500 A with front terminal location

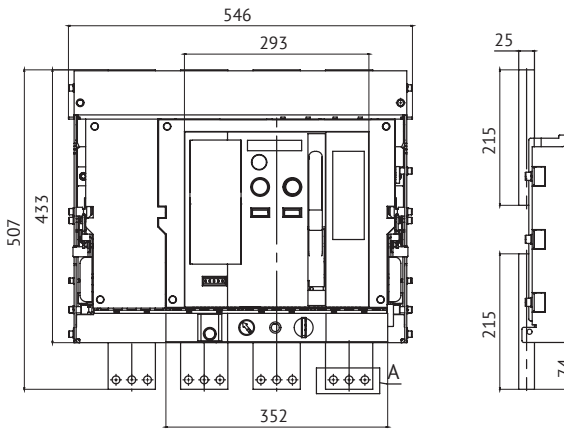

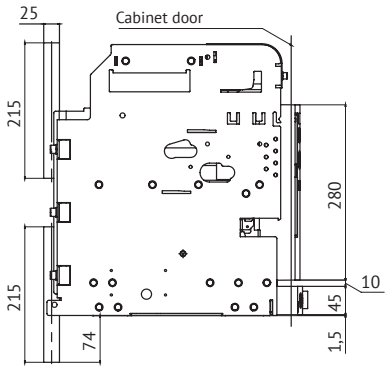

Front panel frame

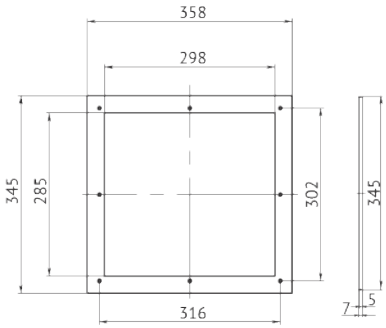

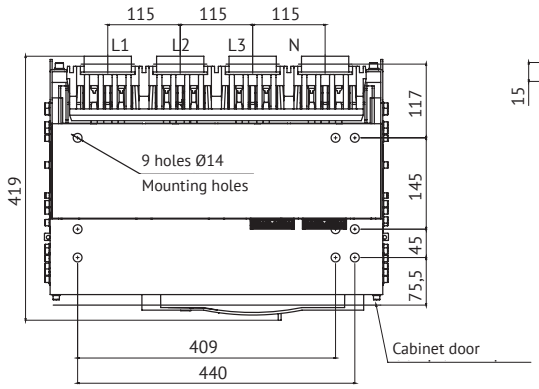

A (2 : 1)

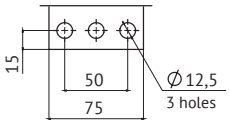

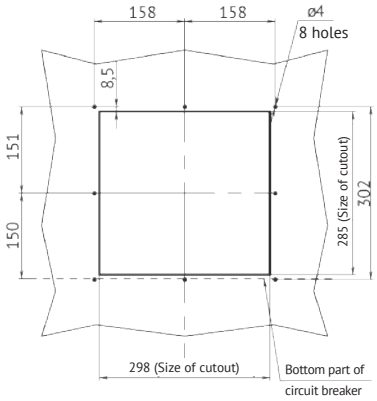

Withdrawable OptiMat A-4000-S4-3P circuit breaker for rated current of 4000 A with rear vertical terminal location

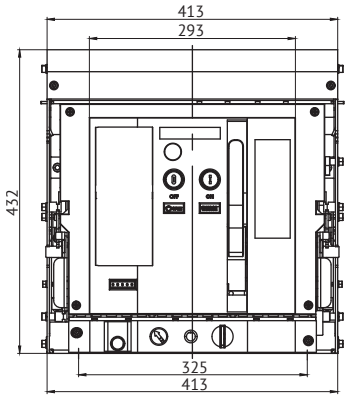

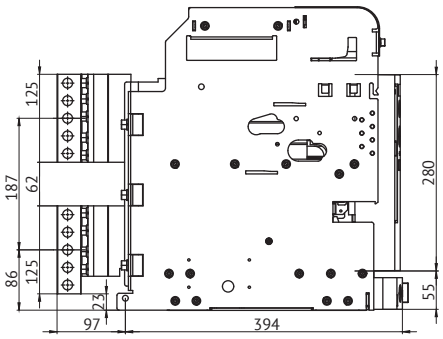

Front panel frame

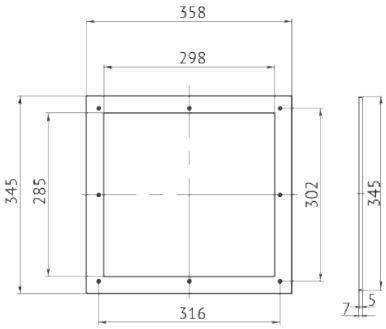

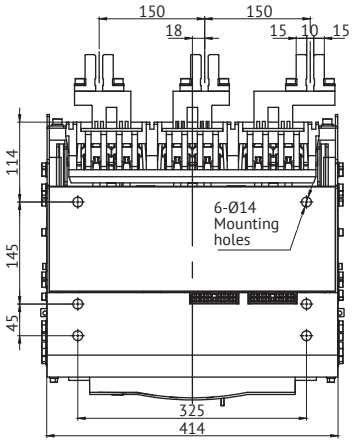

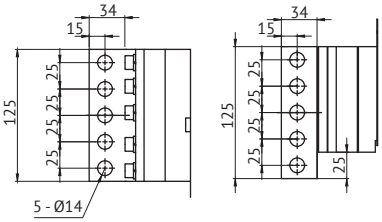

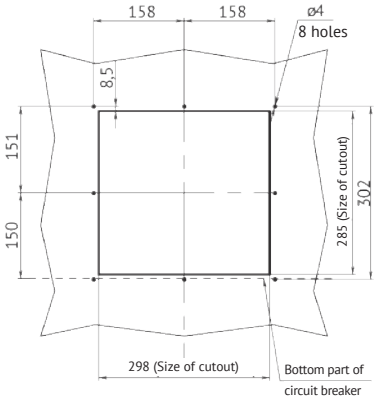

Withdrawable OptiMat A-4000-S4-4P circuit breaker for rated current of 4000 A with rear vertical terminal location

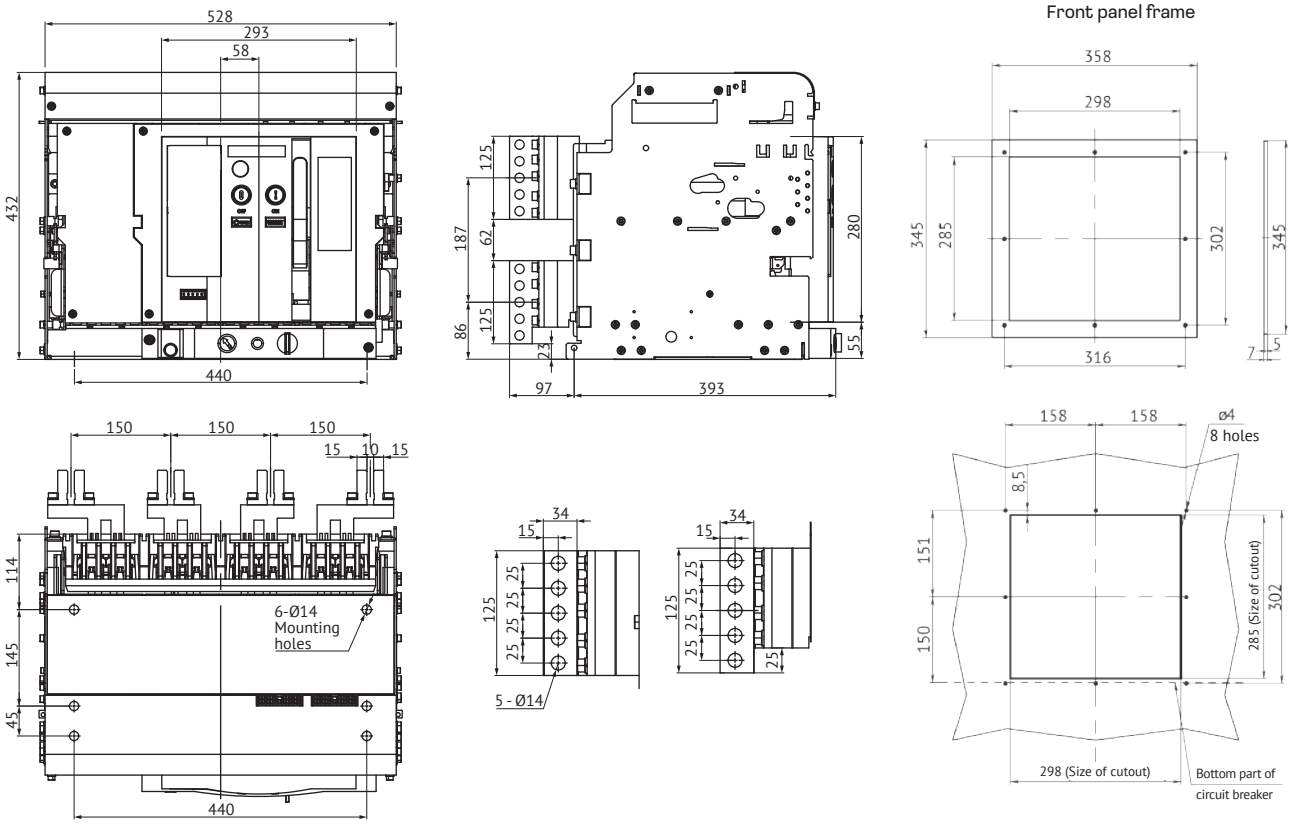

Withdrawable OptiMat A-5000-S5-3P circuit breaker for rated current of 5000 A with rear horizontal terminal location

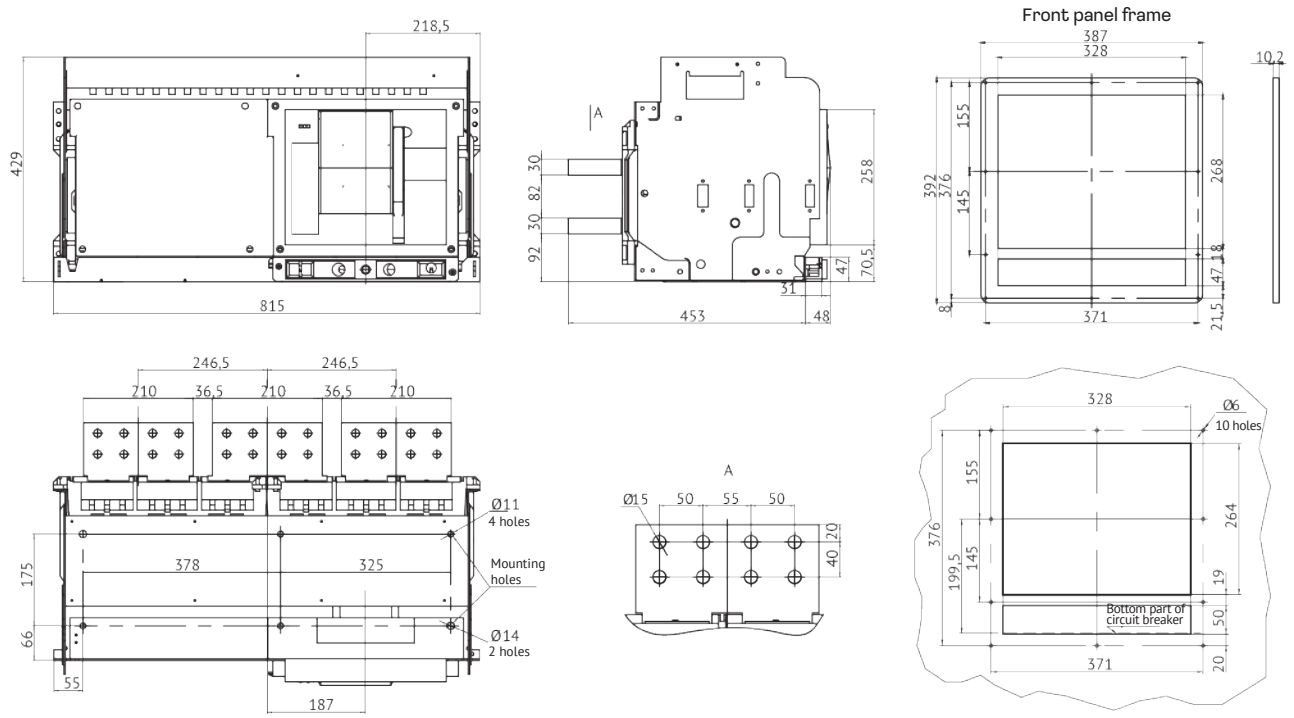

OptiMat A-5000-S6-3P-150kA circuit breaker of withdrawable design for rated current of 5000 A, LSC 150 kA with rear vertical and horizontal terminal location

Front panel frame

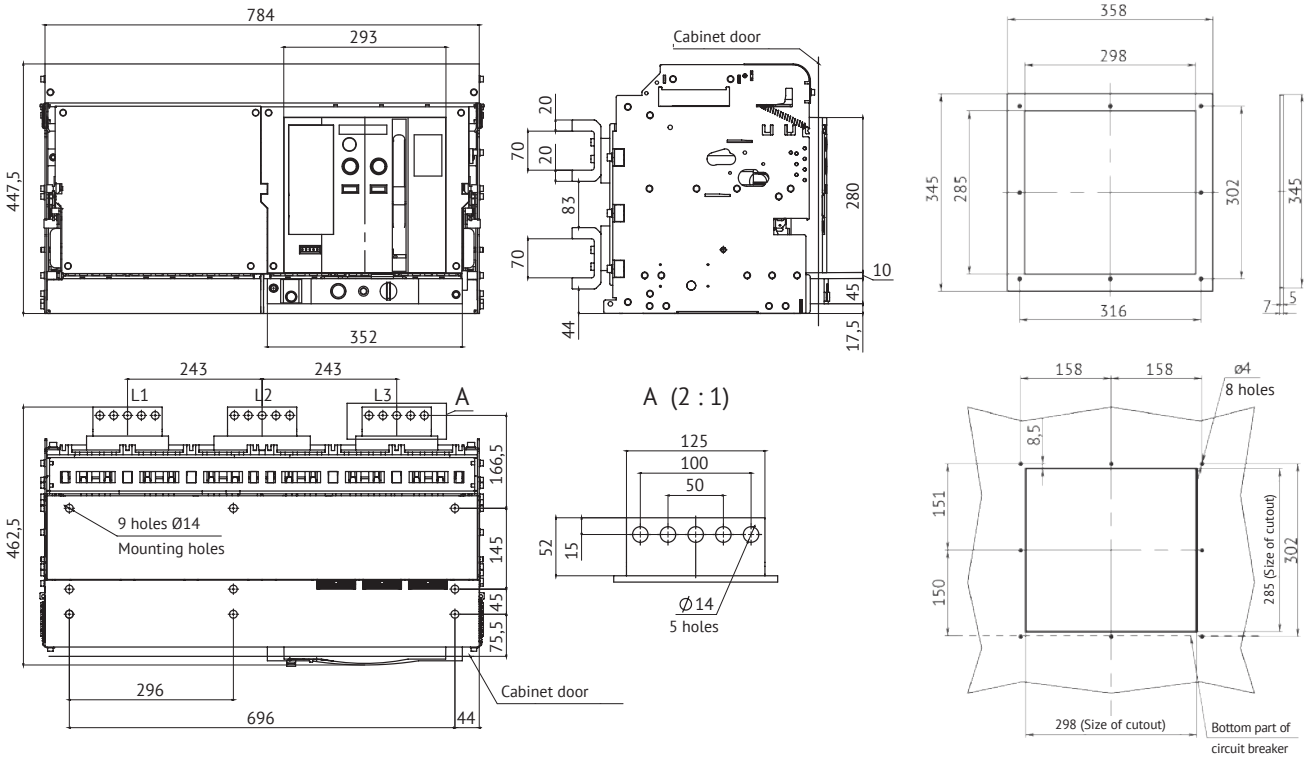

Front panel frame

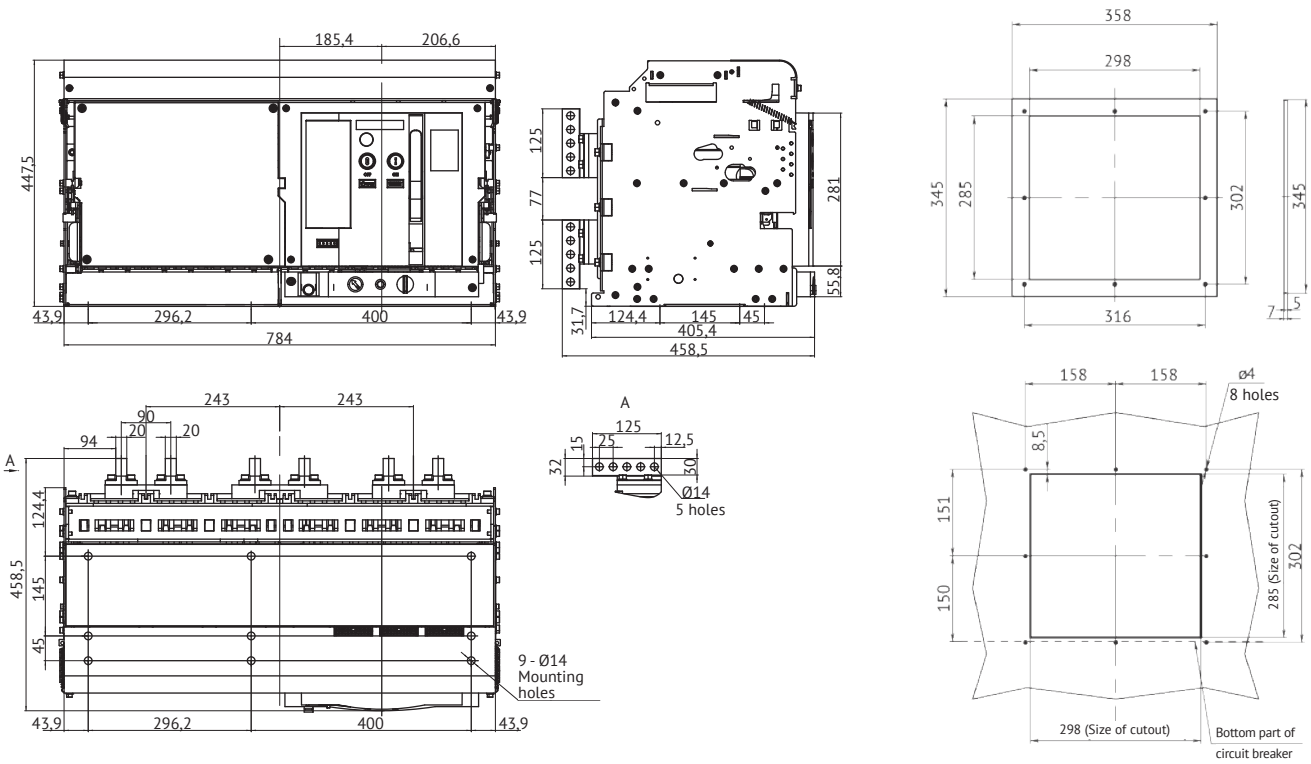

OptiMat A-5000-S6-4P-150kA circuit breaker of withdrawable design for rated current of 5000 A, LSC 150 kA with rear vertical and horizontal terminal location

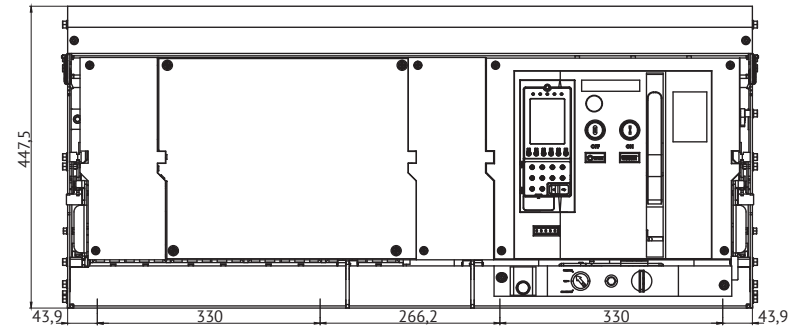

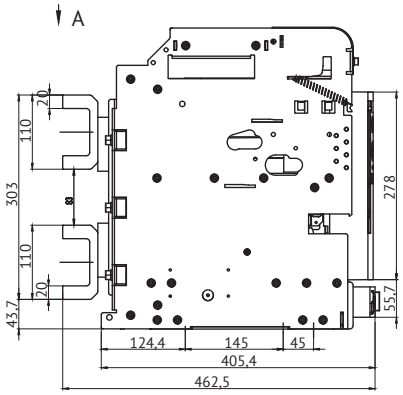

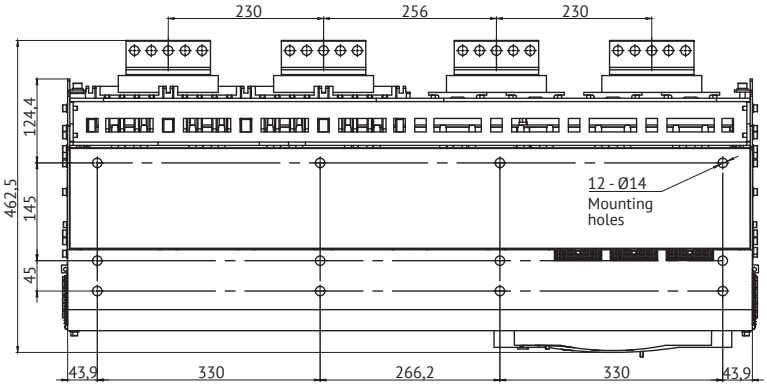

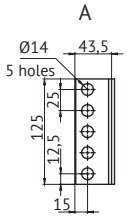

Front panel frame

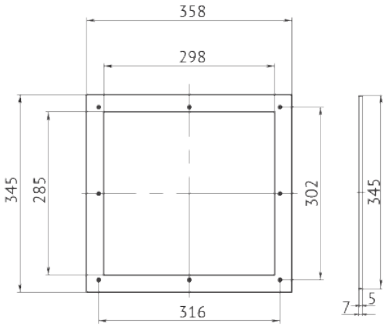

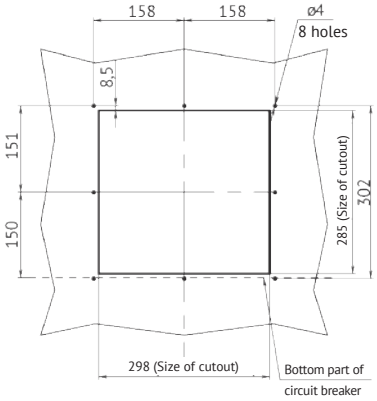

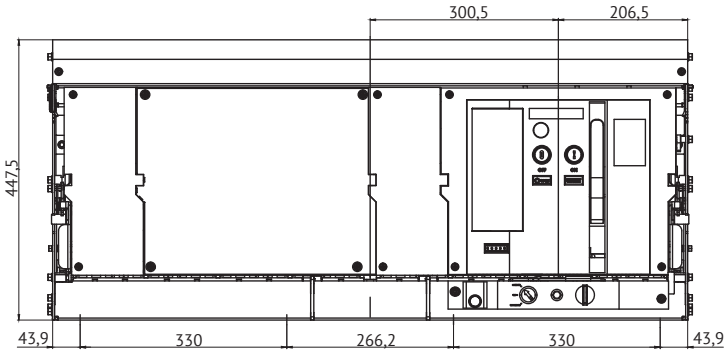

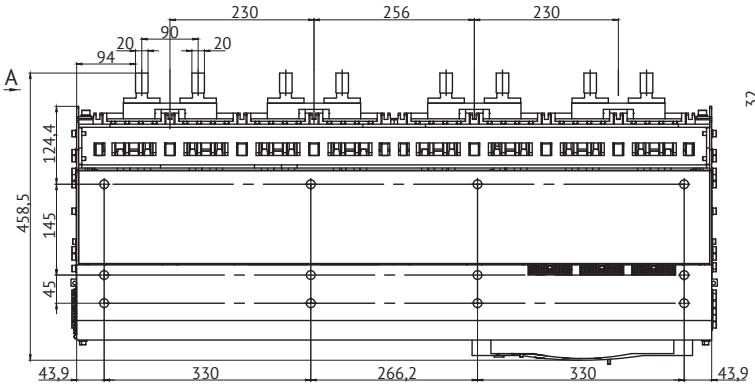

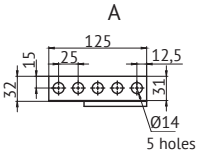

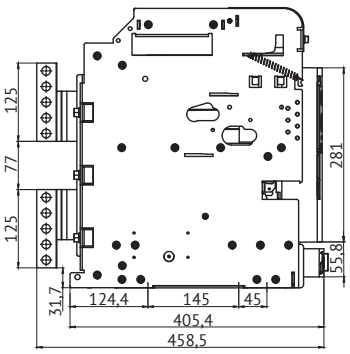

Withdrawable OptiMat A-6300-S6-3P circuit breaker for rated current of 6300 A with rear horizontal terminal location

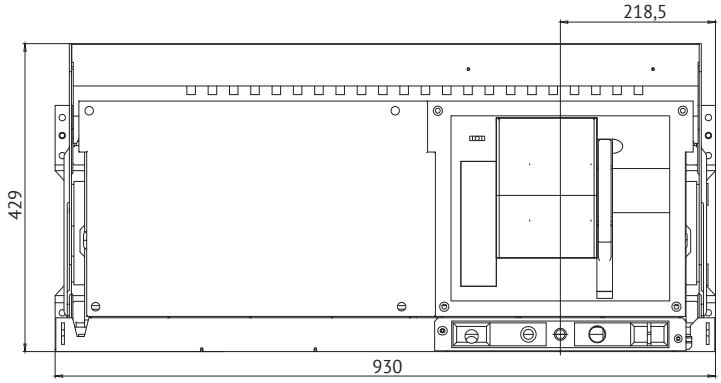

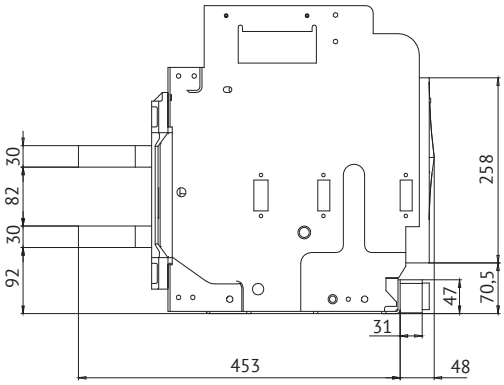

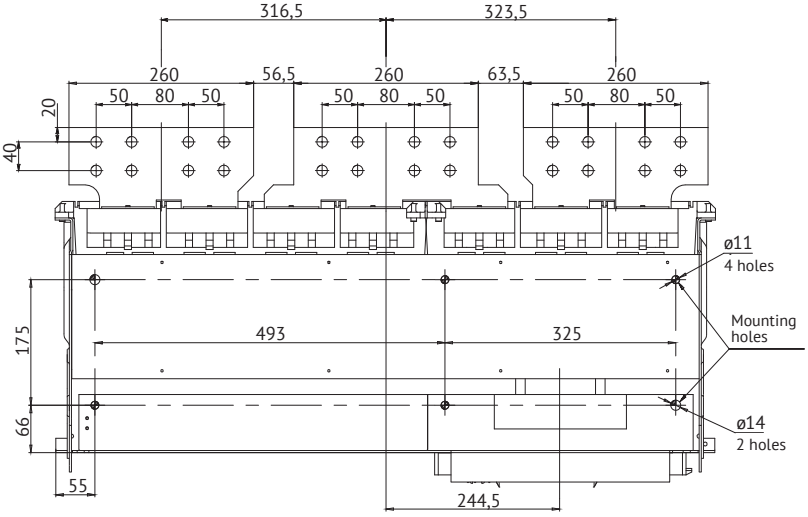

Front panel frame

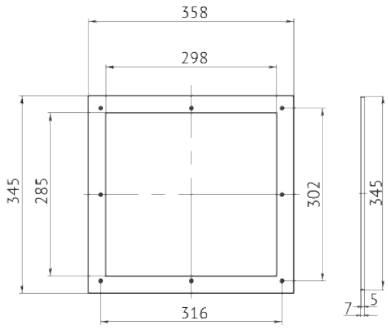

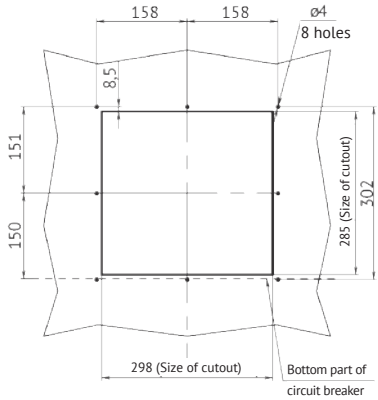

OptiMat A-6300-S6-3P-150kA circuit breaker of withdrawable design for rated current of 6300 A, LSC 150 kA with rear vertical and horizontal terminal location

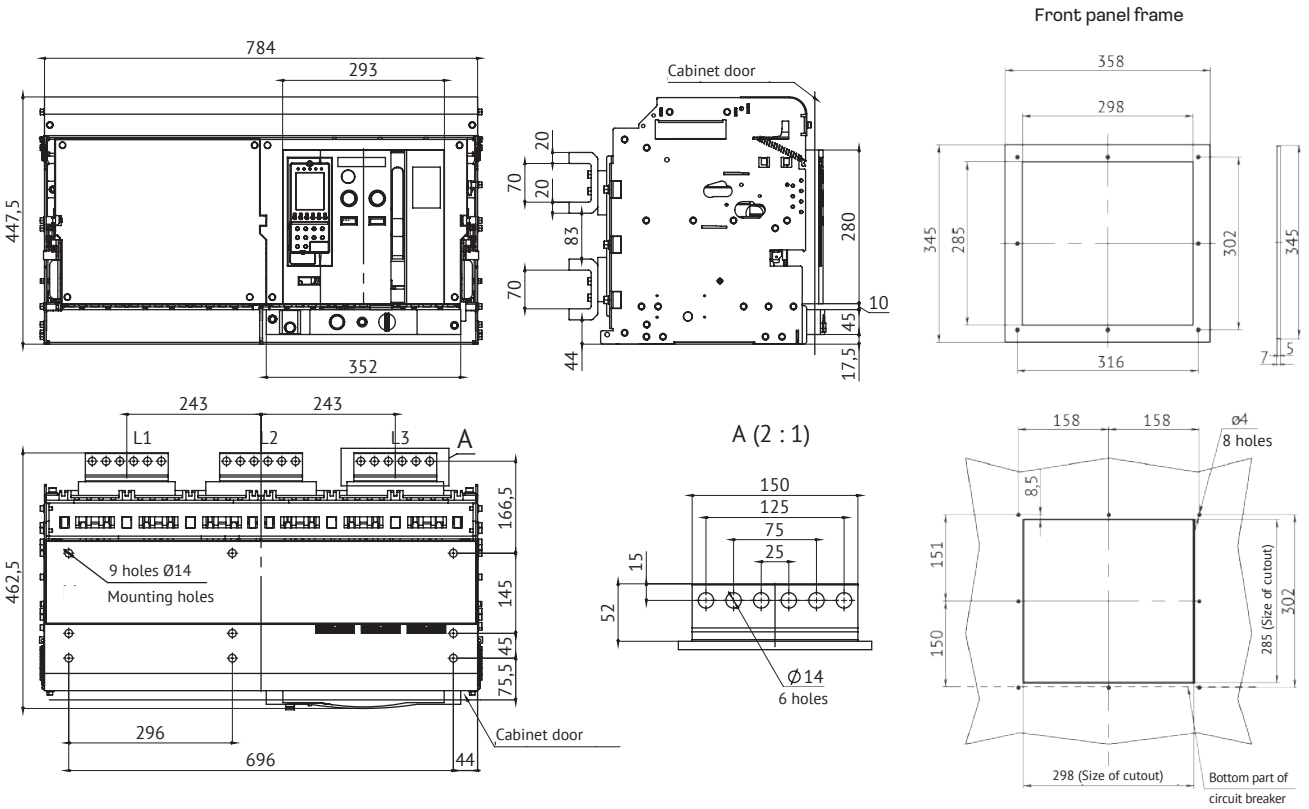

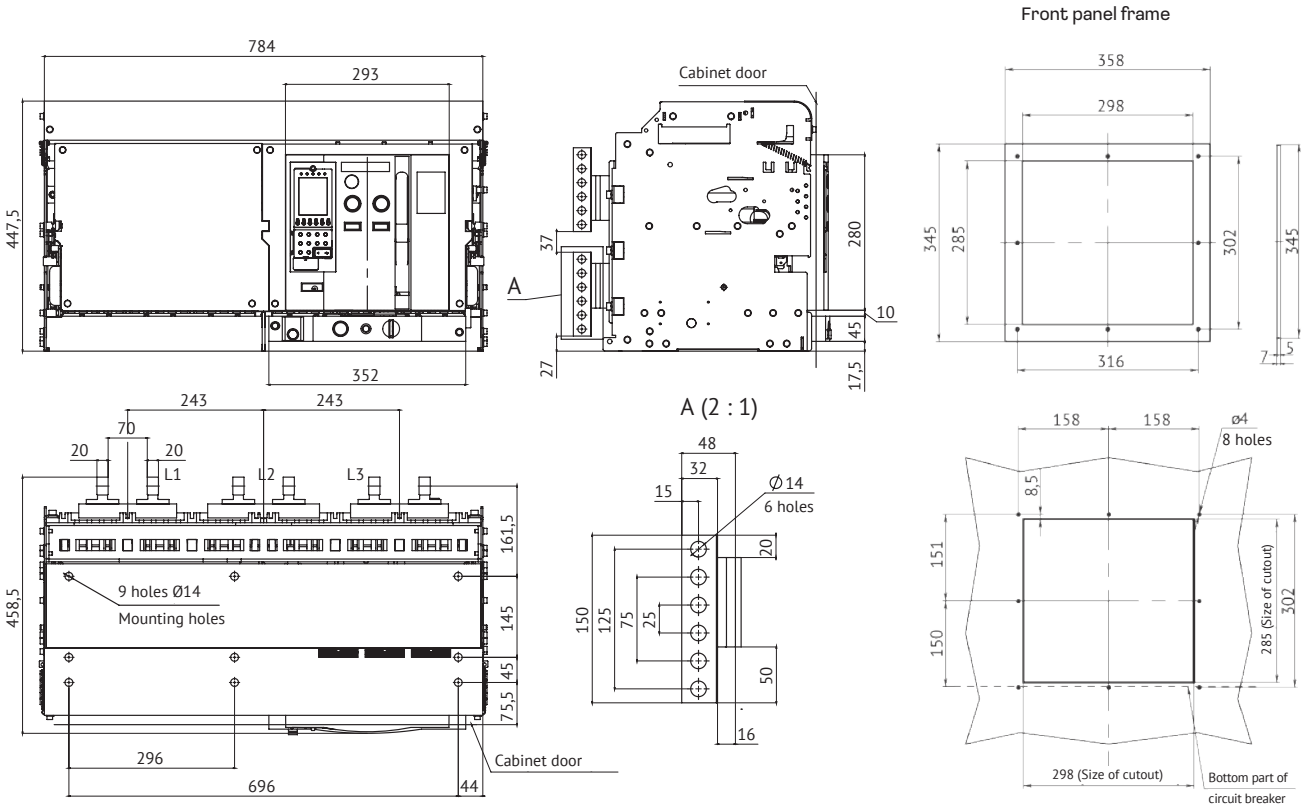

OptiMat A-6300-S6-4P-150kA circuit breaker of withdrawable design for rated current of 6300 A, LSC 150 kA with rear vertical and horizontal terminal location

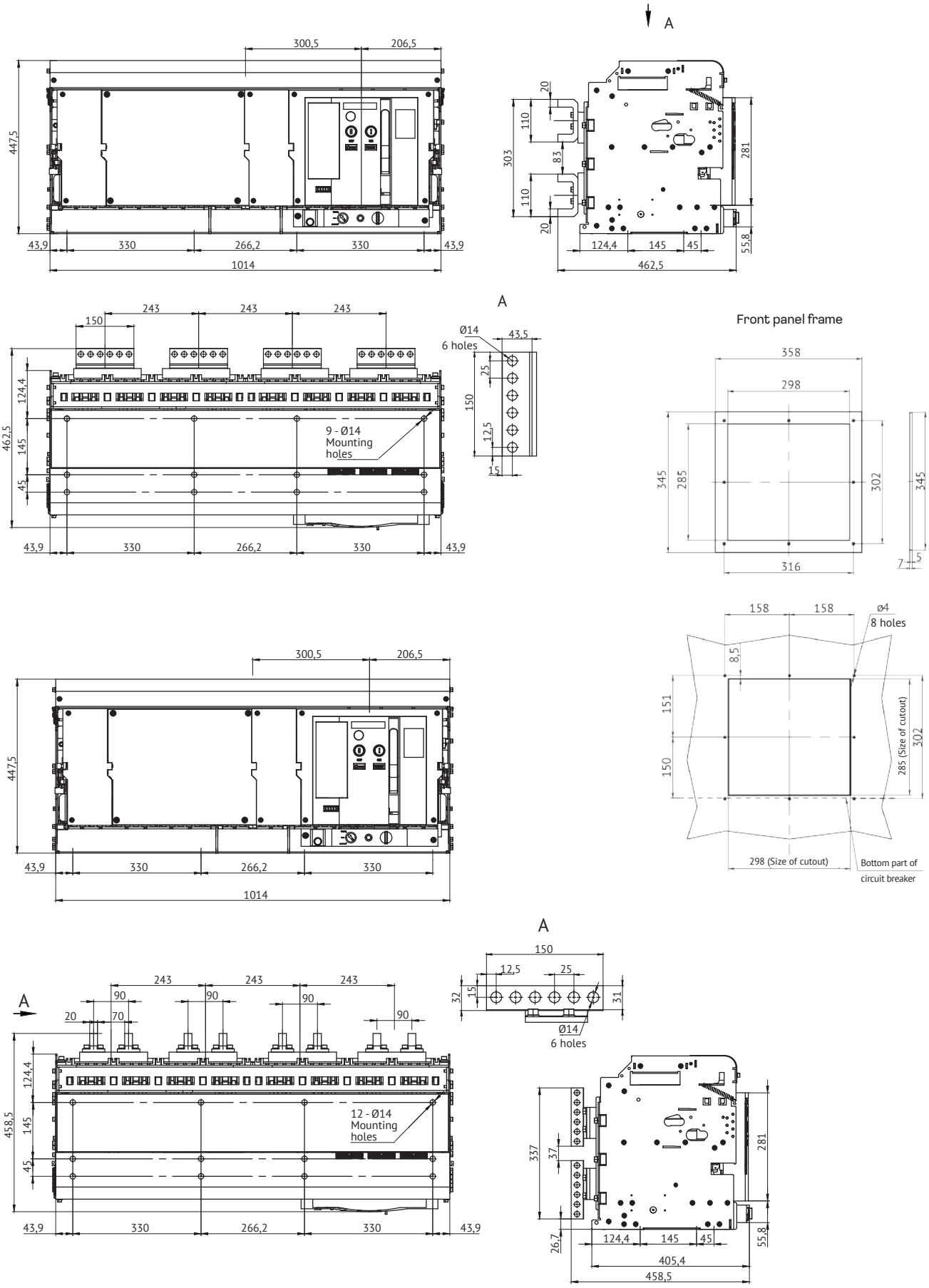

Power cables connection

When connecting power cables, weight of a cable and its mechanical pressure on circuit breaker's terminal should be considered:
• The extended terminals must have an insulated support and the cable must be fixed to a solid surface (Fig. 1).
• When connecting several cables they should be fastened together and fixed on the frame of fixed structure (Fig. 2).

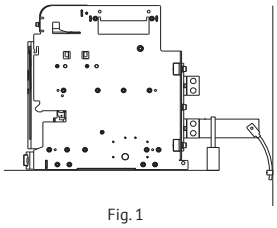
Fig. 1

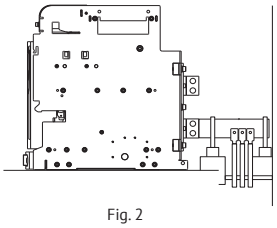
Fig. 2

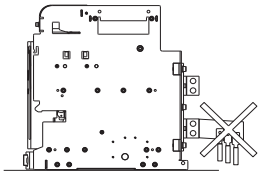
Fig. 3

Busbars connection

When mounting the busbars, the mounting holes should be positioned in such a way as to clearly coincide with the holes on the circuit breaker terminals and not to create breaking pressure when bolted.
To prevent busbars sagging and increased mechanical effect on circuit breaker terminals, the busbars shall be fastened with support isolators.

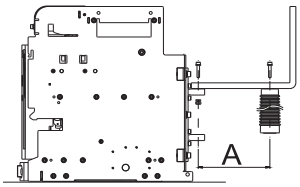

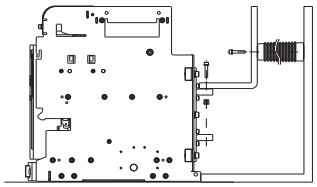

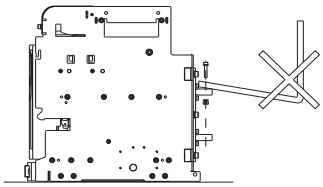

To ensure the busbar system resistance to electrodynamic currents, the distance A must be no more than:

For design short-circuit current, kA	Distance A, mm
30	350
50	300
65	250
80-100	150

Busbars connection to the apparatus

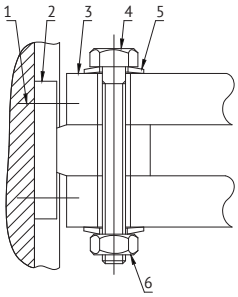

1 — unit fastening screw;
2 — circuit breaker connector;
3 — busbars;
4 — bolt;
5 — plate washers;
6 — nut.

Sizing of busbars

Overall dimension	Rated current, A	Copper busbars		Aluminum busbars		Fasteners	Tightening torque, N·m	
		Quantity, pcs.	Cross-section, mm²	Quantity, pcs.	Cross-section, mm²		Spring washer GOST 6402	Disk spring GOST 3057
S1	630	2	5x40	2	8x50	Bolt M10-6gx50.88.016 GOST 7798	37,5	50
	800		5x50		10x50			
	1000		5x60		10x60			
	1250		6x60					
	1600		10x60	4	10x50			
S2	630	2	5x40	2	8x50	Bolt M12-6gx65.88.016 GOST 7798		
	800		5x50		10x50			
	1000		5x60		10x60			
	1250		5x80					
	1600		5x100	4	10x50			
	2000	3			10x60			
S4	2500	4	5x100	5	10x80	Bolt M12-6gx75.88.016 GOST 7798		
	3200	2	10x100	-	-			
	4000	3	10x125	-	-	Bolt M12-6gx120.88.016 GOST 7798		
		4	10x100	-	-			
S5	5000	7	10x100	-	-			
S6	6300	8	10x100	-	-			

Recommendations for installation of a switchgear

The table shows the minimum allowed distance between the air circuit breaker and the metal parts of the switchgear.

Circuit breaker design version	A, mm	B, mm
Stationary	70	150
Withdrawable	70	0

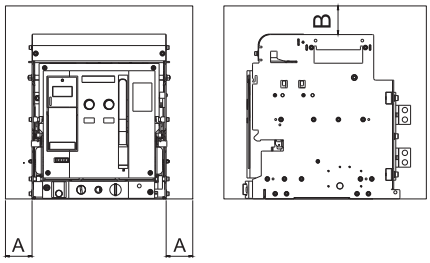

Mounting dimensions of circuit breaker baskets relative to cubicle front panels

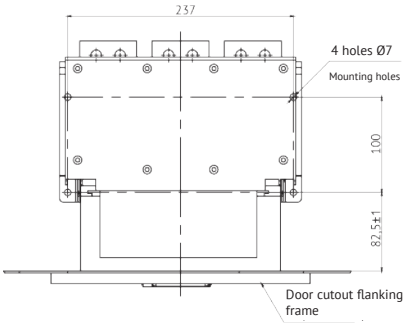

S1 of fixed type with frame installed (top view)

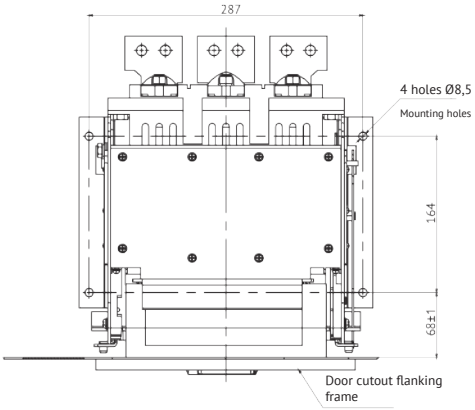

S1 of extended type with frame installed (top view)

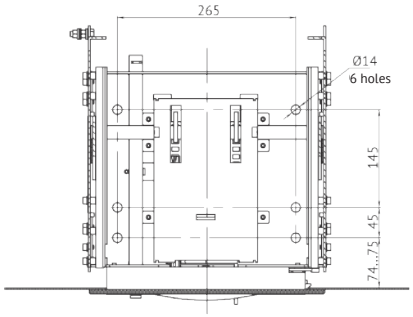

S2 of extended type with the frame installed (plan view)

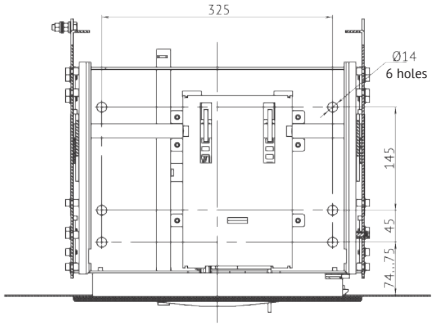

S4 of extended type with the frame installed (plan view)

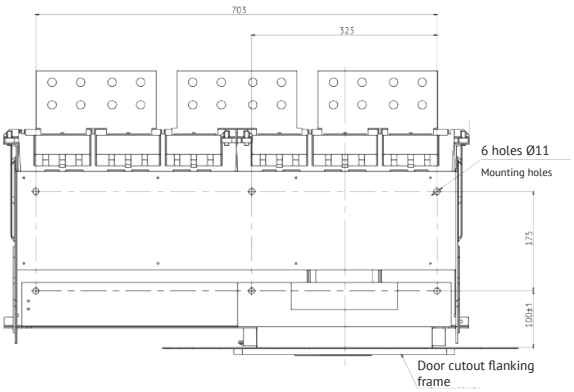

S5 of extended type with the frame installed (plan view)

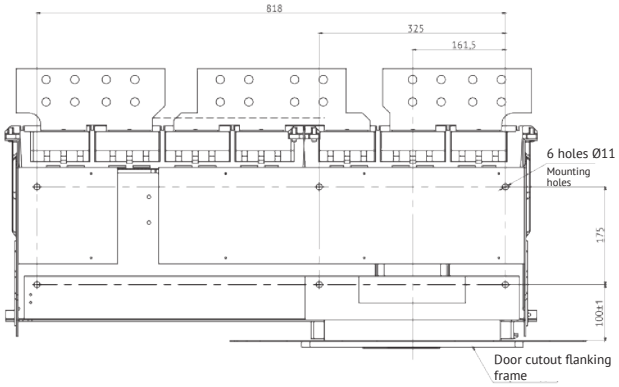

S6 of extended type with the frame installed (plan view)

The installed circuit breaker and the frame to it allows to work with the circuit breaker in the «Drawn in» position, as well as switch it and work with it in the «Test» position (for withdrawable circuit breakers). Drawing out the circuit breaker to the «Drawn out» position with the cabinet door closed is not provided for by the design and is prohibited for technical reasons.

Side view of fixed and withdrawable OptiMat A circuit breakers after mounting into cubicle with frame installation

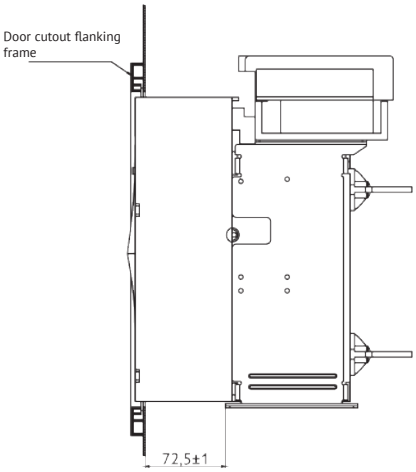

S1 of fixed type with frame installed (side view)

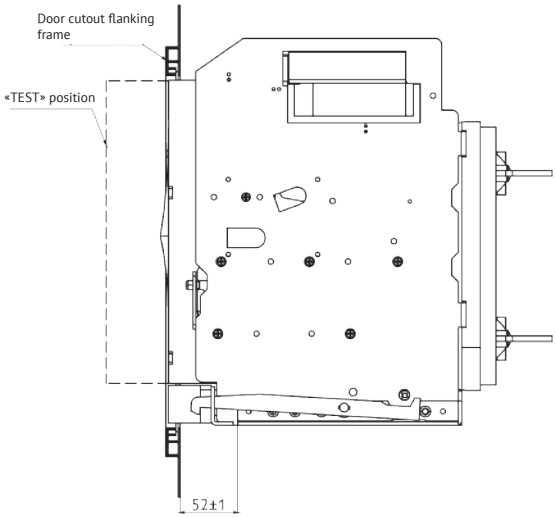

S1 of withdrawable type with the frame installed (side view)

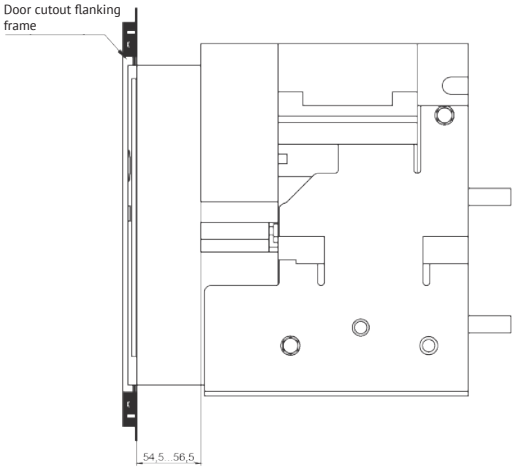

S2, S4 of fixed type with frame installed (side view)

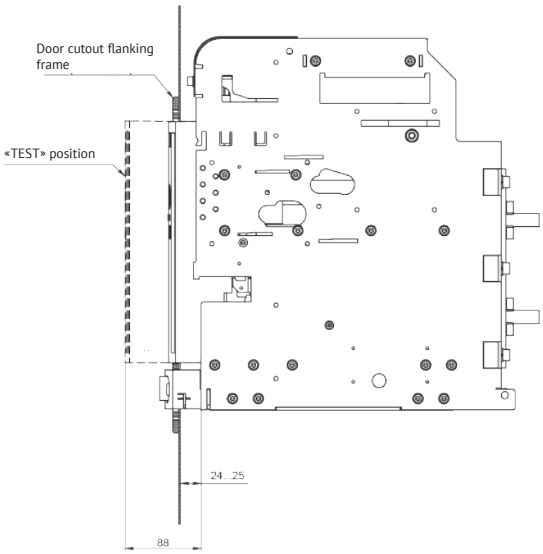

S2, S4 of withdrawable type with the frame installed (side view)

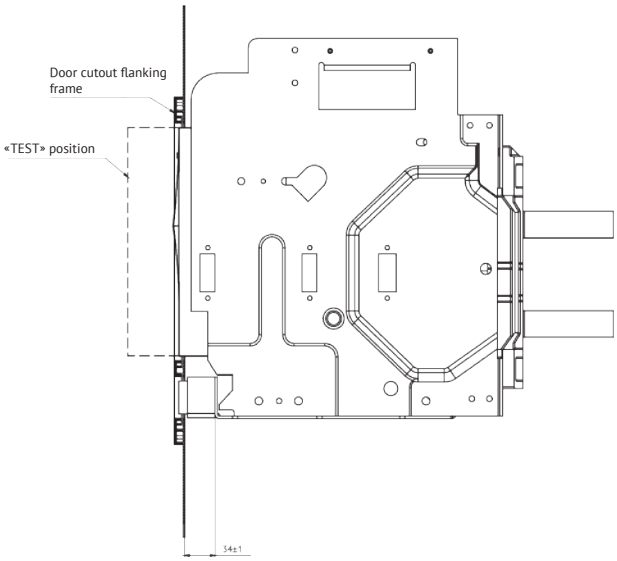

S5, S6 of withdrawable type with frame installed (side view)

A correctly installed circuit breaker and a frame to it allow to open the cabinet doors with the circuit breaker in the «Drawn in» and «Test» positions.

Switch-disconnectors, load break switches, switches and fuses

OptiBlock Fuse-switch-disconnectors from 160 to 630 A	255
OptiVert Strip-type fuse-switch-disconnectors from 160 to 630 A	263
OptiSwitch DI Switch-disconnectors from 16 to 125 A	271
OptiSwitch DI Load break switches and changeover switches from 25 to 3150 A	279
OptiSwitch 4G Cam switches from 10 to 100 A	291
OptiFuse NH Fuse elements from 6 to 630 A	325
OptiFuse FR Fast response fuses from 40 to 4000 A	331

OptiBlock, OptiVert, OptiSwitch, OptiFuse are used for control, distribution and protection of facilities: for uninterruptible power supply, at transformer substations and in control, relay protection and automation cabinets.

Fuse-switch-disconnectors

OptiBlock 255

In (A): 160 to 630
Ue (V): AC — 400 to 690
DC — 220 to 440

OptiVert 263

In (A): 160 to 1260
Ue (V): AC — 400 to 690
Installed on collecting busbars

Load break switches and load switches

OptiSwitch DI up to 125 A 271

In (A): 25 to 125
Ue (V): up to 690 AC
Installed on DIN rail

OptiSwitch DI up to 3150 A 279

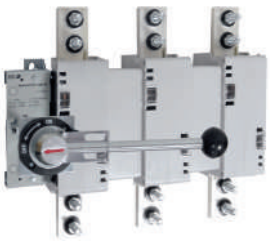

In (A): 25 to 3150
Ue (V): up to 690 AC
Handle and stem included

Cam switches

OptiSwitch 4C 291

In (A): 10 to 100
Manufacture of custom switches

Low-voltage fuses

OptiFuse NH 325

In (A): 6 to 630
Standard NH
For OptiVert, OptiBlock FSD configurations

Fast response fuse

OptiFuse FR 331

In (A): 40 to 4000
Ue (V): 450 to 1500

OptiBlock

↗ Fuse-switch-disconnectors

OptiBlock fuse-switch-disconnectors (FSDs) are designed for switch on and off loads and protection of single- and three-phase AC circuits from short circuits and overloads (when used in combination with fuses). FSDs provide a visual clearance and completely replace configurations consisting of a conventional disconnector, cables and fuse holders. The use of these devices provides significant saving of switchgear workspace, reduces the number of electrical connections and live parts used.

Designation

OptiBlock - 00 - 1 - M - S

(1) (2) (3) (4) (5)

1	Series	OptiBlock			
2	Device dimensions	00 — up to 160 A	1 — up to 250 A	2 — up to 400 A	3 — up to 630 A
3	Number of poles	1 — single-pole	«N/A» — three-pole		
4	Type of clamp for external conductors	M — bolted	«N/A» — bridged		
5	Version for direct mounting on busbars without drilling	S — version for direct mounting on busbars without drilling			

Series advantages

The high-quality conductor and insulating materials used do not support combustion, are halogen-free, safe for health and the environment, and ensure a long service life. Operating temperature range -40 to +80 °C*.

Safe short-circuit clearing up to 80 kA (in configurations with fuses), on-load switching capability using an arc chute.

Profiled holes in the housing for better heat dissipation.

Visual monitoring of fuse condition using sight ports.

Special versions for mounting devices directly on conducting busbars with a busbar distance of 60 mm.

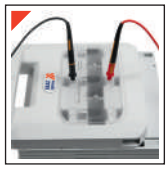

Special holes on the front panel for circuit condition monitoring using a multimeter.

* Operational current derating factor should be applied at temperatures above +35 °C (ref. the ambient temperature - rated current curve on page 258).

Items

Appearance	Product name	Rated current, A	Fuse dimensions	Number of poles	Installed on busbars	Code
	OptiBlock-00-1	160	NH00	1	no	337871
	OptiBlock-00-M	160	NH00	3	no	337872
	OptiBlock-00-M-S	160	NH00	3	yes	337873
	OptiBlock-1-M	250	NH1	3	no	337874
	OptiBlock-1-M-S	250	NH1	3	yes	337875
	OptiBlock-2-M	400	NH2	3	no	337876
	OptiBlock-2-M-S	400	NH2	3	yes	337878
	OptiBlock-3-M	630	NH3	3	no	337879

Codes in the tables of this chapter can be changed. If you did not find the necessary codes on the website, please call KEAZ customer service.

Technical specification

Single-pole devices

Parameter / Configuration	00-1		
Number of poles	1		
Fuse dimensions	NH00		NH00, NH000
Fuse rating In, A (max)	160	125	100
Power dissipation rating with fuse Pn, W	12	12	12
Conventional thermal current with short-circuiting busbar Ith, A	160	125	100
Power dissipation rating with short-circuiting busbar Pn, W	12		
Rated operating voltage Ue, V	230/400	500	690
Utilization category	AC-23B	AC-22B	AC-21B
Rated insulation voltage Ui, V	800		
Rated impulse withstand voltage Uimp, kV	12		
Rated frequency, Hz	50...60		
IP rating	IP00 for outputs, IP20 for enclosure		
Pollution degree	3		
Rated operating mode	Continuous		
Rated short-time withstand current Icw, kA/1s	8		
Power loss without fuse, W	12		
Connecting cables			
Conductor cross-section, mm²	16–70		

Three-pole devices

Parameter / Configuration	0		1		2		3	
Number of poles	3		3		3		3	
Fuse dimensions	NH00		NH1		NH2		NH3	
Fuse rating In, A (max)	160	100	250	200	400	315	630	425
Power dissipation rating with fuse Pn, W	12		23		34		48	
Conventional thermal current with short-circuiting busbar Ith, A	160	100	250	200	400	315	630	425
Power dissipation rating with short-circuiting busbar Pn, W	12		23		34		48	
Rated operating voltage Ue, V	AC400	AC690	AC400	AC690	AC400	AC690	AC400	AC690
Utilization category	AC-23B	AC-21B	AC-23B	AC-21B	AC-23B	AC-21B	AC-23B	AC-21B
Rated insulation voltage Ui, V	800				690			
Rated impulse withstand voltage Uimp, kV	8				12			
Rated frequency, Hz	50...60							
IP rating	IP00 for outputs, IP20 for enclosure							
Pollution degree	3							
Rated operating mode	Continuous							
Rated short-time withstand current Icw, kA/1s	8		10		15		20	
Power loss without fuse, W	12		23		34		40	
Connecting cables								
Standard cable terminal	M8		M10		M10		M12	
Conductor cross-section, mm²	16–70		25–150		25–150		25–240	

Dependence of the rated current on the ambient temperature

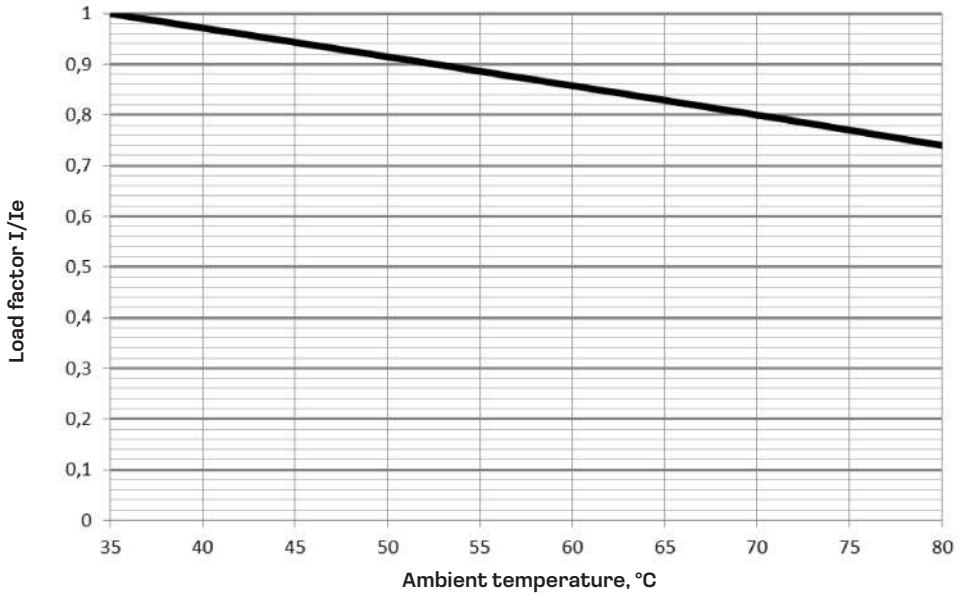

Dependence of the rated current on the number of adjacent devices

Number of adjacent devices	Acceptable factor
2 и 3	0,8
4 и 5	0,7
6 through 9	0,6
10 and higher	0,5

Example calculation for three adjacent OptiBlock 630 A at an ambient temperature of +50 °C:
Load = 630 x 0,91 x 0,8 = 458,64 A

Overall dimensions (mm)

OptiBlock-00-1

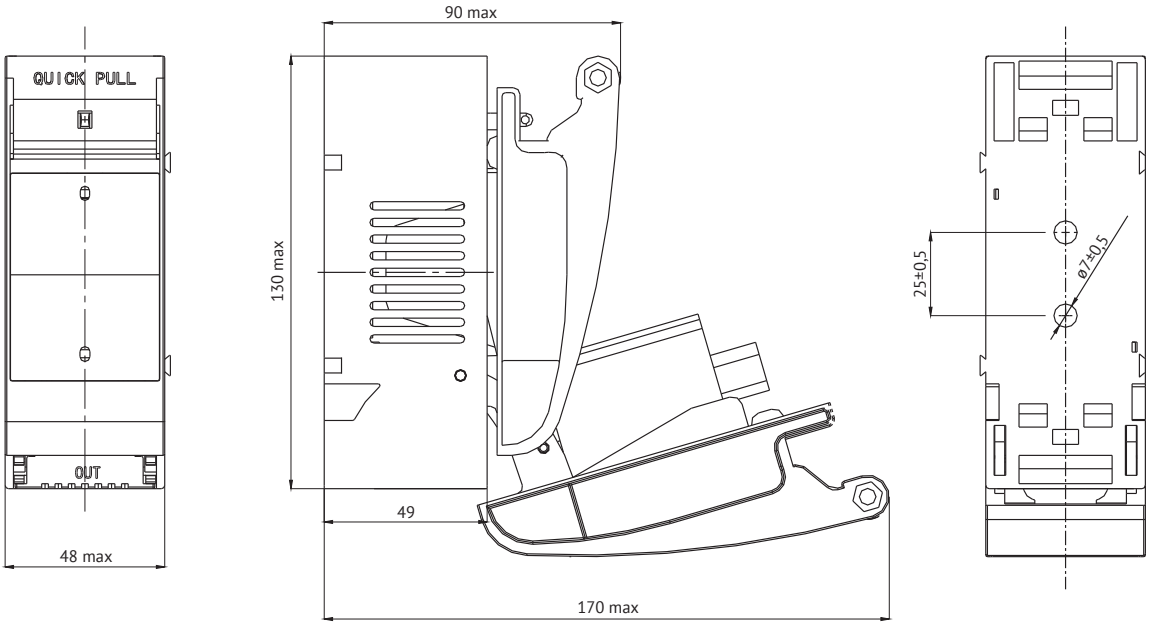

OptiBlock-00-M-S

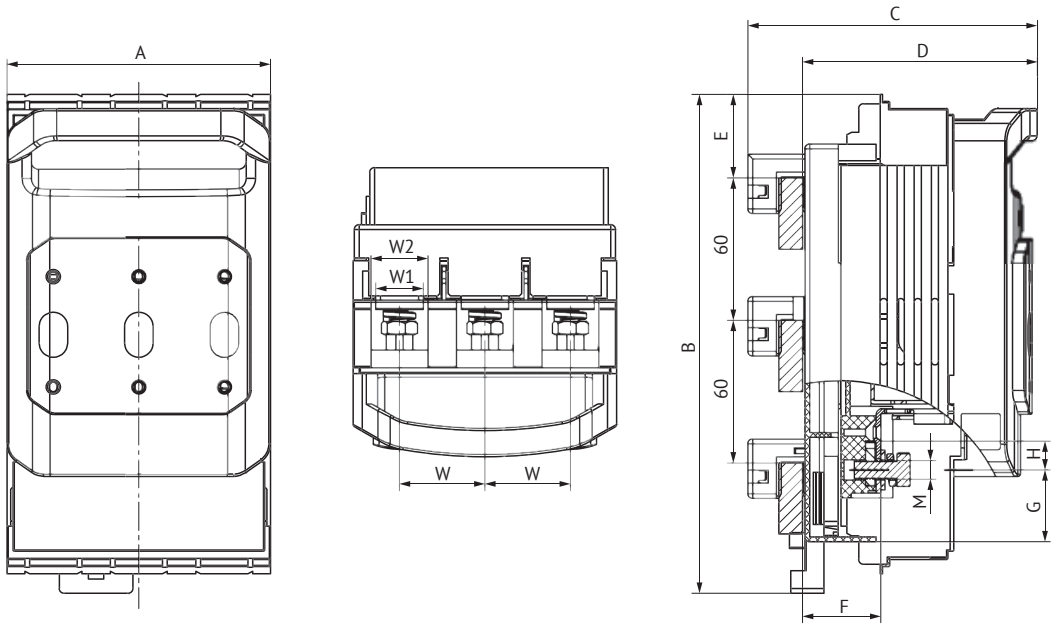

The values are in mm

A	B	C	D	E	F	G	H	M	W	W1	W2
111	210	122	99	35	33	30 21	12	M8	36	20	24

OptiBlock-00-M

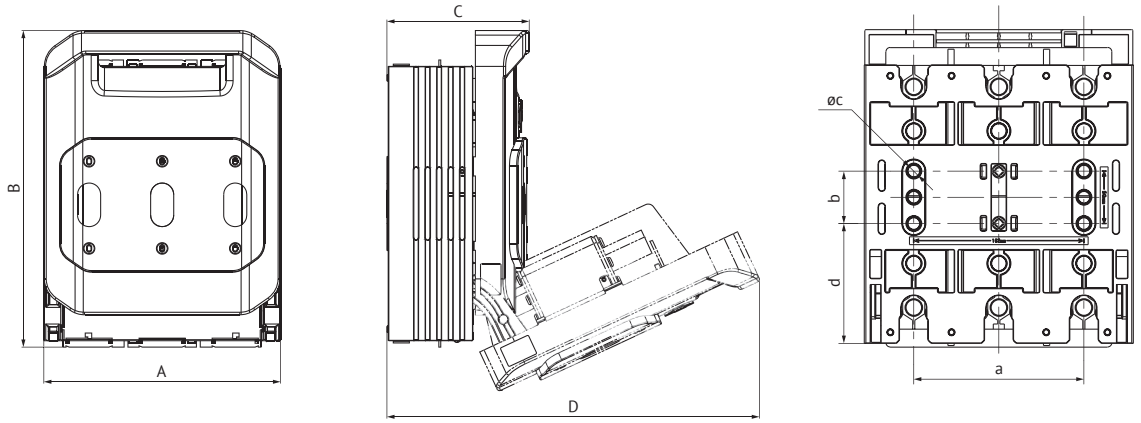

The values are in mm

A	B	C	D	E	F	G	H	M	a	b	øc	d
111	202	83	205	116	24	17	36	M8	66	25	7	70

OptiBlock-1-M-S

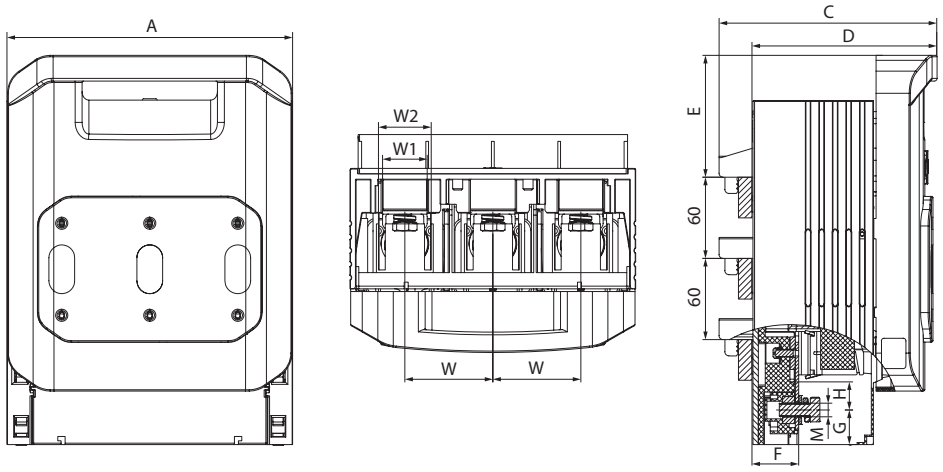

The values are in mm

A	B	C	D	E	F	G	H	M	W	W1	W2
185	241	145	120	68	32,5	14,5	16	M10	57	30	40

OptiBlock-1-M

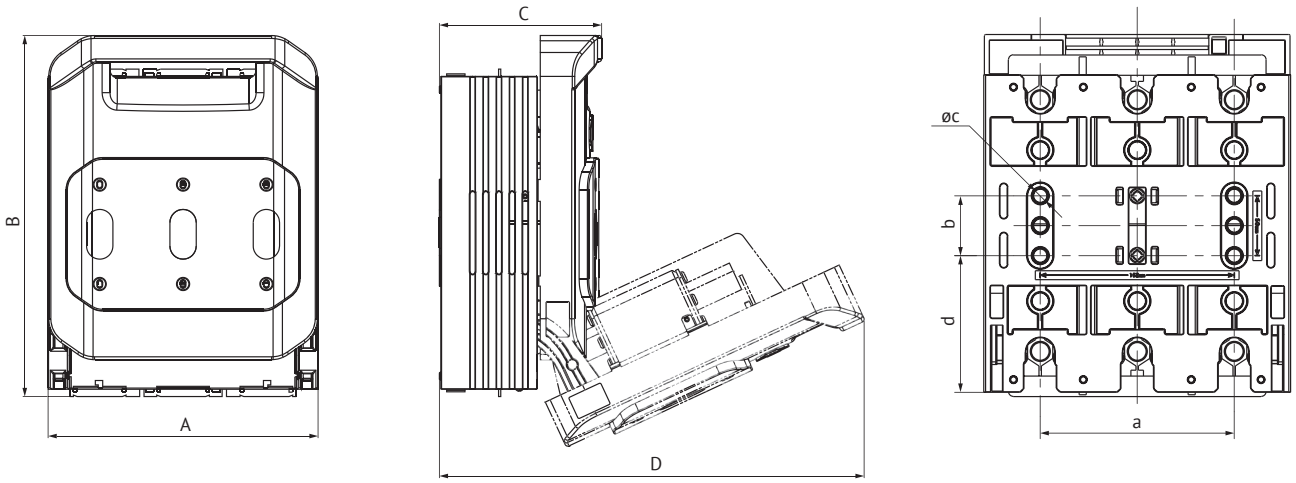

The values are in mm

A	B	C	D	E	F	G	H	M	a	b	øc	d
185	247	110	295	185	14,5	22,5	57	M10	114	50	11	82

OptiBlock-2-M-S

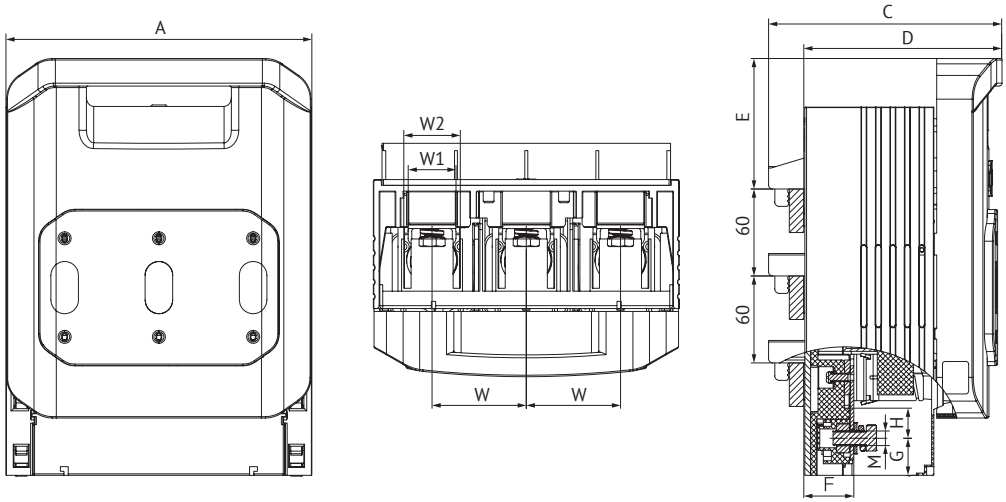

The values are in mm

A	B	C	D	E	F	G	H	M	W	W1	W2
211	288	161	137	73	34,5	25,5 18,5	19	M10	65	33	50

OptiBlock-2-M

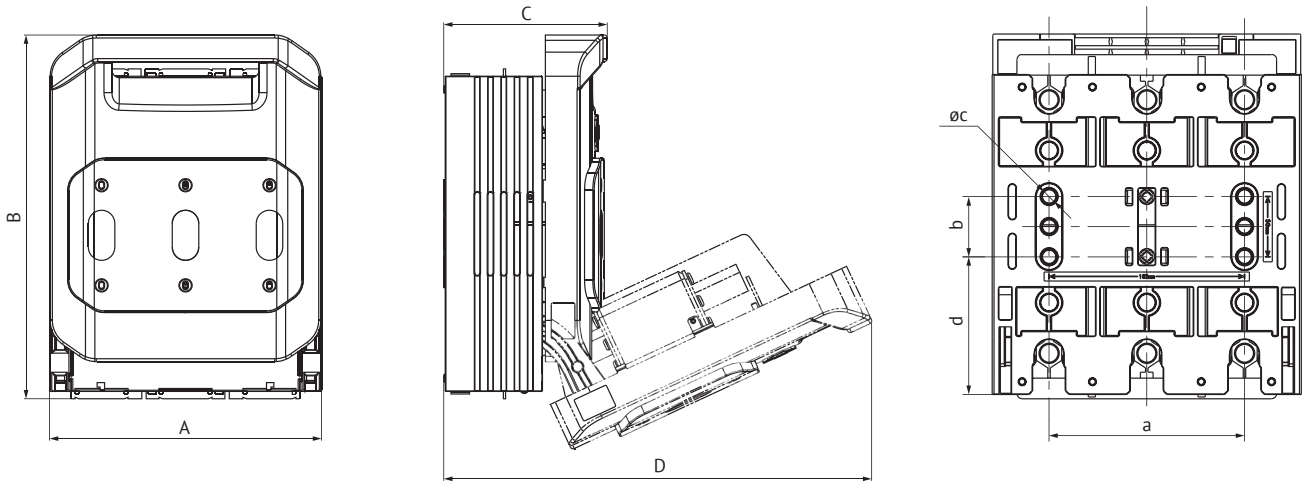

The values are in mm

A	B	C	D	E	F	G	H	M	a	b	øc	d
211	290	125	340	210	25,5	26	65	M10	130	50	11	105,5

OptiBlock-3-M

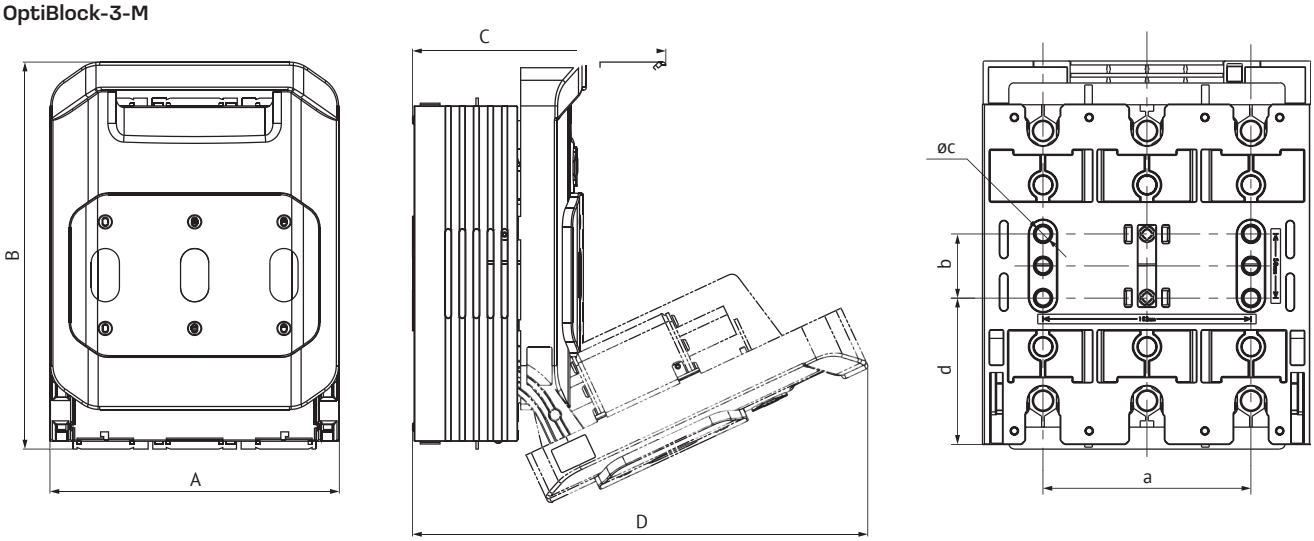

The values are in mm

A	B	C	D	E	F	G	H	M	a	b	øc	d
256	300	145	360	210	34	30	81	M12	162	50	11	114

Accessories

OptiBlock, OptiVert auxiliary contact

Appearance	Dimensions	Code	Weight, kg
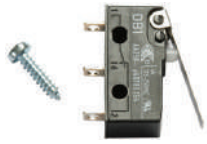	OptiBlock-1	332786	0,01
	OptiBlock-2		
	OptiBlock-3		

Auxiliary contact parameters	
Rated insulation voltage Ui, V	1000
Rated operating voltage Ue, V	AC250
Conventional thermal current Ith, A	10
Utilization category	AC-21V

OptiVert

↗ Strip-type fuse-switch-disconnectors

OptiVert strip-type fuse-switch-disconnectors (SFSD) are designed to switch on and off loads and protect three-phase AC electrical circuits from short circuits and overloads (when used in combination with fuses). SFSDs provide a visual clearance and completely replace the structure consisting of a conventional disconnector, cables and fuse holders. These devices provide significant savings in the working space of switchgears, reduce the number of electrical connections and conductive parts used.

Designation

OptiVert - 00 - 6 - M

(1) (2) (3) (4)

1	Series	OptiVert		
2	Device size designation	00 — up to 160 A	2 — up to 400 A	3 — up to 630 A
3	Switching mode	1 — phase-by-phase	6 — three-phase	
4	Type of clamp for external conductors	M — bolt clamp		

Series advantages

Polyamide-based insulating materials do not sustain combustion, do not contain halogens, and are safe for humans and the environment.

Safe disconnection of short-circuit currents up to 120 kA (when used in combination with fuses). Visual break.

Contacts are made of high-quality electrical copper and plated with silver, nickel or tin, depending on the rated current and configuration. Operating temperature range from -40 to +80 °C*.

Modular compact design with a device width of max. 98 mm allows to organize the maximum number of outgoing lines in minimal dimensions, as well as simplify the low-voltage switchgear in terms of the use of metal structures, the location of supply and connecting cables.

Shaped holes in the housing provide better heat dissipation.

Can be switched off under load. Effective arc extinguishing due to the design of arc extinguishing chambers as part of the product.

Dovetail mount significantly reduces the installation time of the device for standard sizes 400/630A.

Visual monitoring of the fuse status using inspection windows. A microswitch can be installed to indicate the device status.

* it is necessary to apply a reduction factor for the rated operating current at temperatures above +35 °C, see the graph of dependence of the rated current on the ambient temperature (page 266).

Items

Appearance	Product name	Rated current, A	Method of operation	Fuse dimensions	Code
	OptiVert-00-1-M	160	phase-by-phase	NH00	337880
	OptiVert-00-6-M	160	three-phase	NH00	337881
	OptiVert-2-1-M	400	phase-by-phase	NH2	337882

Appearance	Product name	Rated current, A	Method of operation	Fuse dimensions	Code
	OptiVert-2-6-M	400	three-phase	NH2	337883
	OptiVert-3-1-M	630	phase-by-phase	NH2,NH3	337884
	OptiVert-3-6-M	630	three-phase	NH2,NH3	337885
	OptiVert-2-1-M новый	400	phase-by-phase	NH2	368564
	OptiVert-2-6-M новый	400	three-phase	NH2	368565
	OptiVert-3-1-M новый	630	phase-by-phase	NH2,NH3	368569
	OptiVert-3-6-M новый	630	three-phase	NH2,NH3	368571

Codes indicated in the chapter tables are subject to change. If you did not find the necessary codes on the website, please contact KEAZ customer service.

Technical specification

Parameter / Configuration	00-1			2-1			3-1			2x3-1		
	00-6			2-6			3-6			2x3-6		
Number of poles	3			3			3			3		
Fuse dimensions	NH00			NH2			NH3			NH3		
Rated current, A(max)	160	125	100	400	400	315	630	630	500	1250	1250	1000
Power dissipation rating with fuse Pn, W	12	12	12	28	34	45	40	48	60	-	-	-
Conventional thermal current with short-circuit plate Ith, A	160	125	100	400	400	315	630	630	500	1250	1250	1000
Power dissipation rating with short-circuit plate Pn, W	12			28			40			-		
Rated operating voltage Ue, V	AC400	AC500	AC690	AC400	AC500	AC690	AC400	AC500	AC690	AC400	AC500	AC690
Utilization category	AC-23B	AC-23B	AC-22B	AC-23B	AC-22B	AC-21B	AC-23B	AC-22B	AC-21B	AC-23B	AC-22B	AC-21B
Rated insulation voltage Ui, V	1000											
Rated impulse withstand voltage Uimp, kV	12											
Rated frequency, Hz	50-60											
Ingress protection rating	IP00 for terminals											
	IP20 for enclosure											
Pollution degree	3											
Rated operating mode	Continuous											
Rated short-time withstand current Icw, kA/1s	8			12			12			12		
Power loss without fuse link, W	12			28			40			40		
Distance between busbars, mm	185											
Conductor connection												
Thread diameter	M8			M10			M12			M12		
Conductor cross-section, mm²	16-70			35-240			70-240			70-240		

Dependence of rated current on ambient temperature

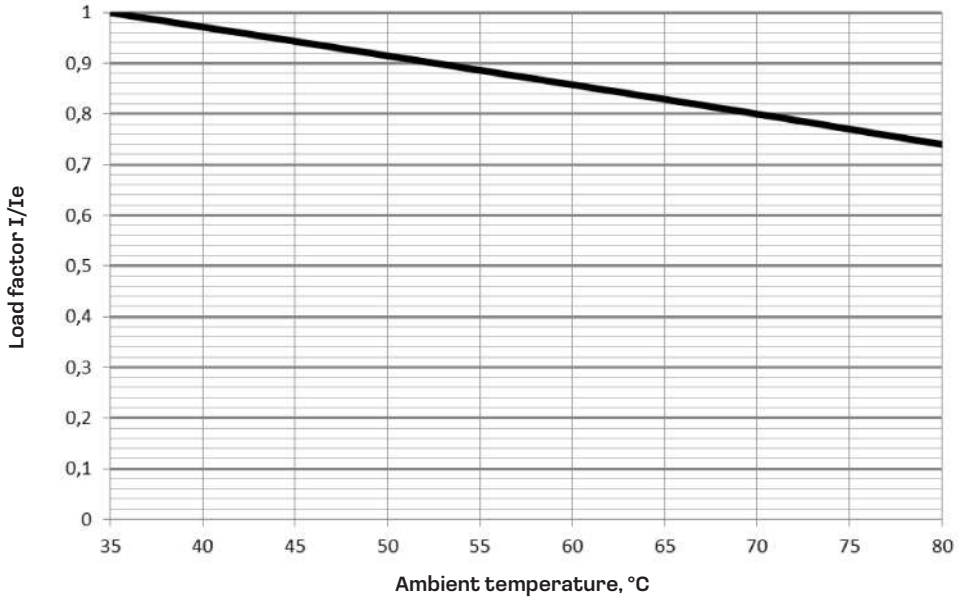

Dependence of rated current on number of adjacent devices

Number of adjacent devices	Acceptable factor
2 and 3	0,8
4 and 5	0,7
6 to 9 inclusive	0,6
10 and higher	0,5

Calculation example for three adjacent OptiVert 630 A at an ambient temperature of +50 °C:
Load = 630 x 0,91 x 0,8 = 458,64 A

Accessories

Appearance	Size	Product name	Code
	2/3	Auxiliary contact OptiBlock, OptiVert	332786
	00	Fuse monitoring device for OptiVert-00	368574
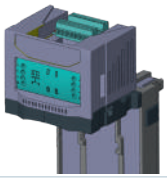	2/3	Fuse monitoring device for OptiVert-2/3	368575
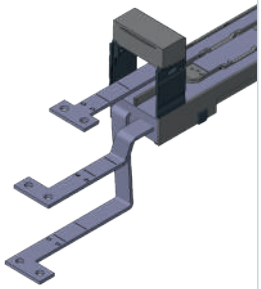	2/3	Set of terminals for installing CTs on OptiVert-2/3	368573
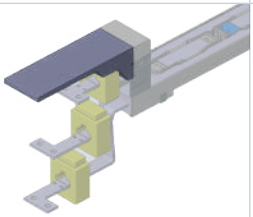	2/3	Terminal cover for OptiVert-2/3	368576
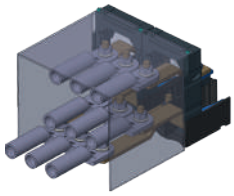	3	Terminal cover for two OptiVert-3 (new)	368577
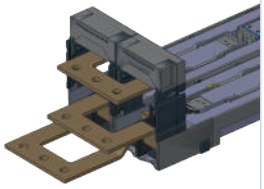	3	Terminal connection kit of two OptiVert-3 (new)	368580
-	3	Kit for combining handles of OptiVert-3-1 (new)	368661
-	3	Kit for combining handles of OptiVert-3-6 (new)	368578

Overall dimensions (mm)

OptiVert-00-1

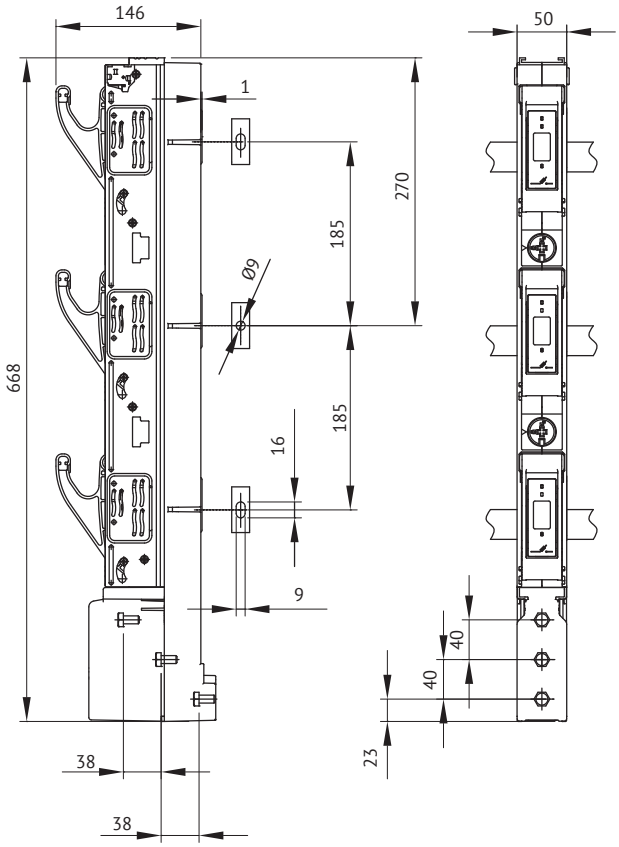

OptiVert-00-6

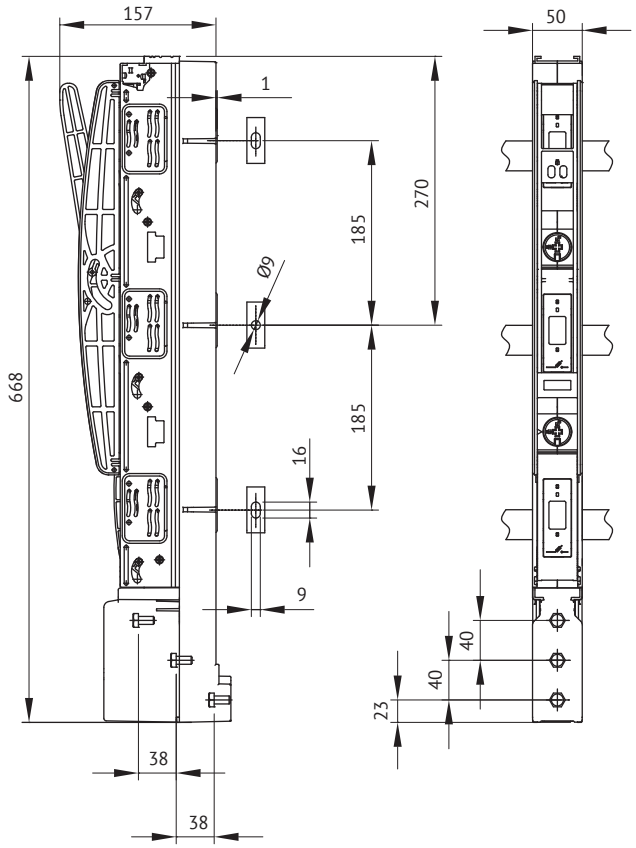

OptiVert-2-1, OptiVert-3-1

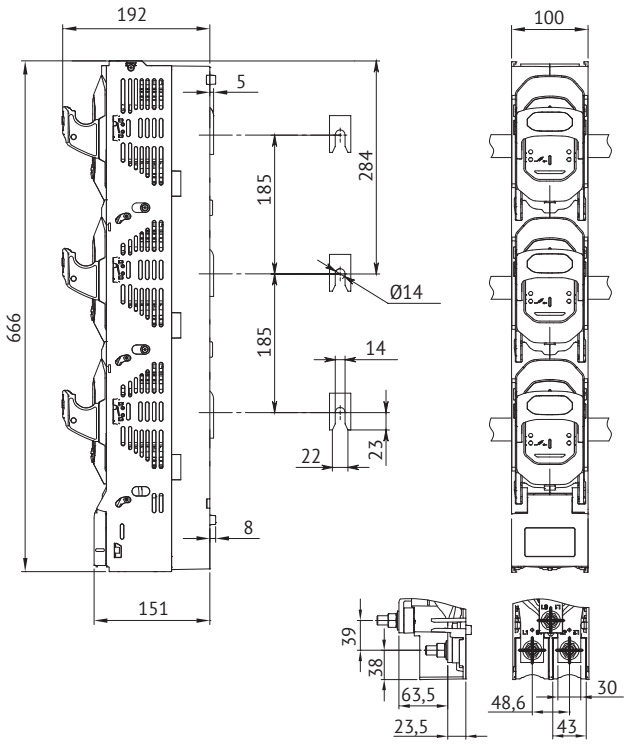

OptiVert-2-6, OptiVert-3-6

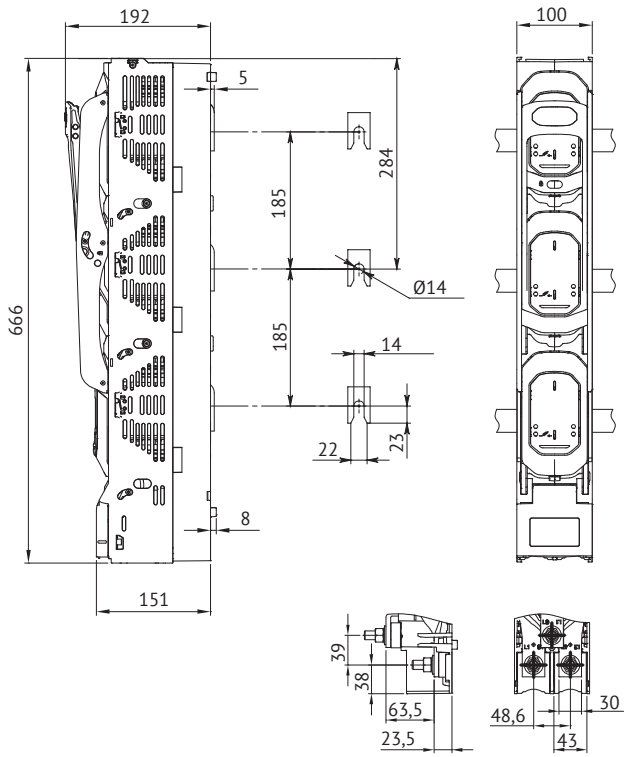

OptiVert-2-1 (new), OptiVert-3-1 (new)

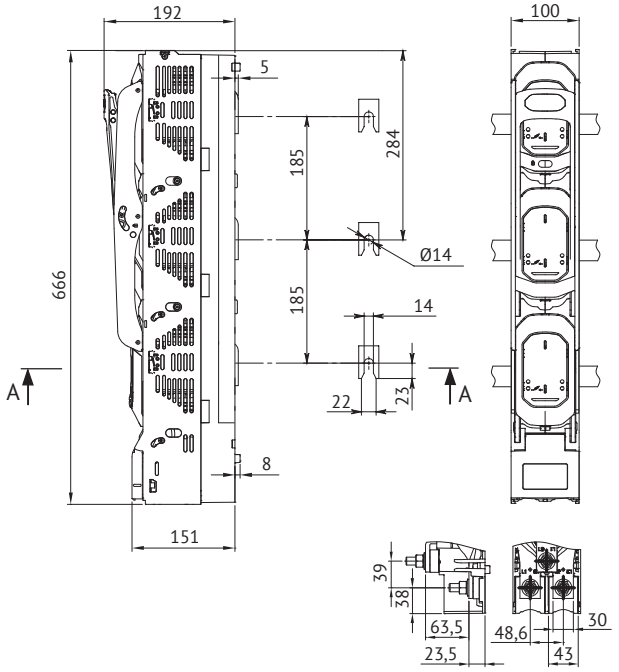

OptiVert-2-6 (new), OptiVert-3-6 (new)

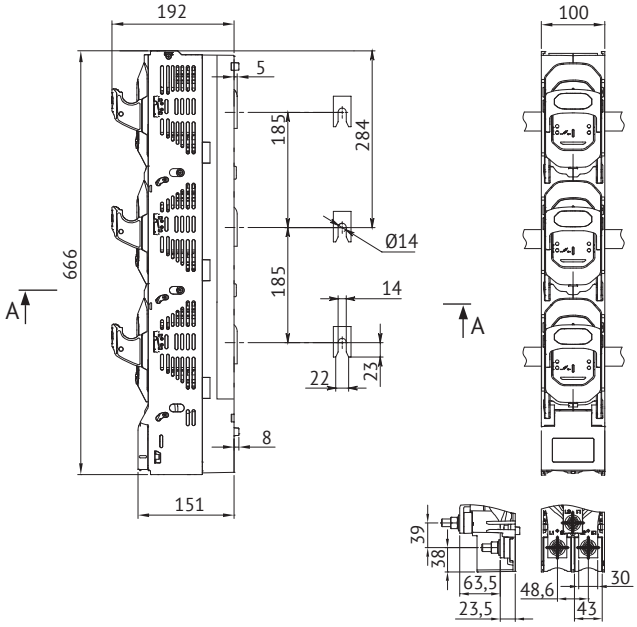

OptiVert-00

with installed fuse monitoring device

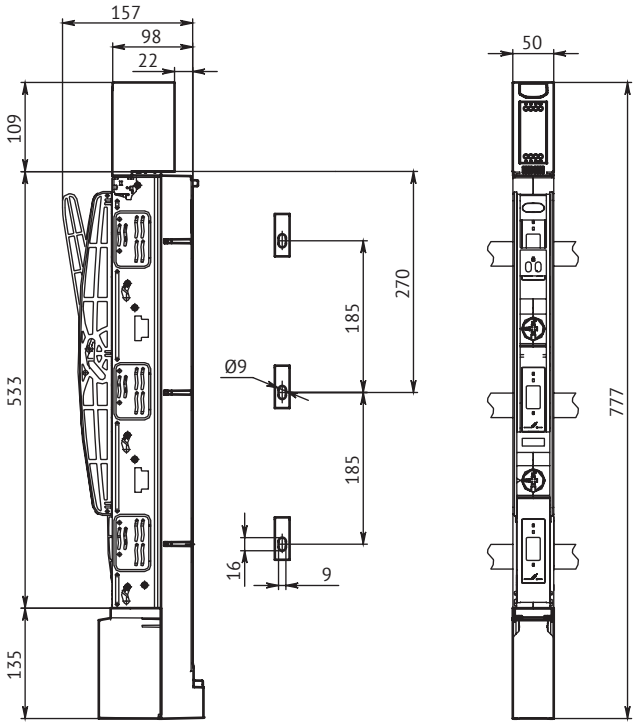

OptiVert-(2-3)

with installed fuse monitoring device,
with installed set of terminals for installing current transformers

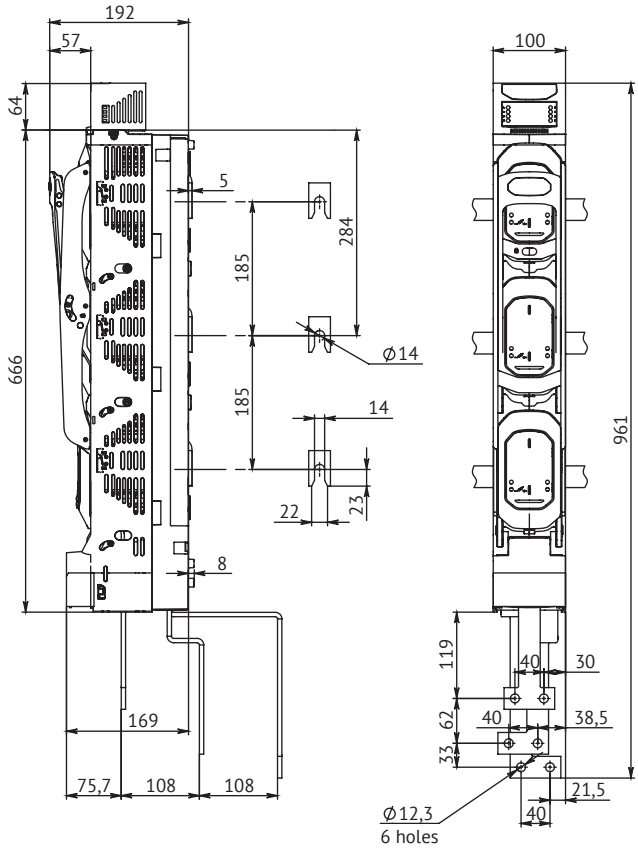

OptiVert-(2-3)

with installed fuse monitoring device,
with installed set of terminals for installing current transformers,
with installed terminal cover

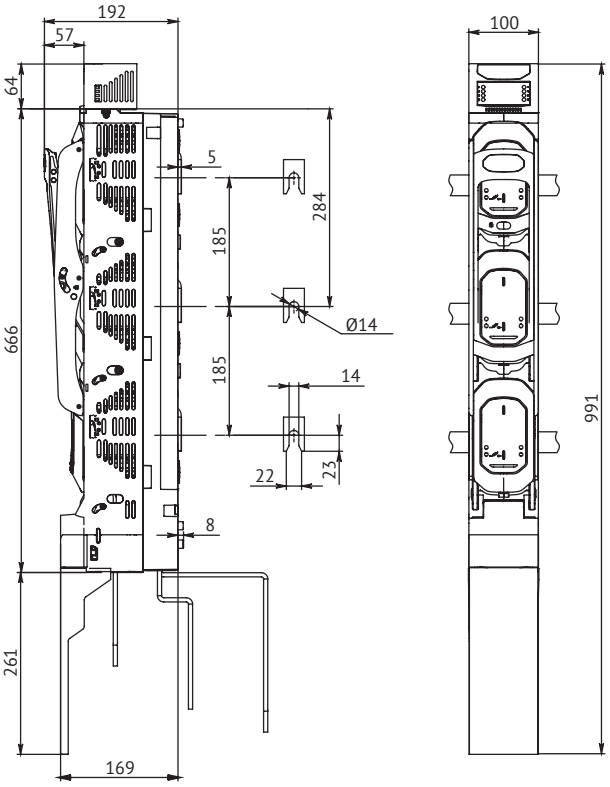

OptiVert-(2-3)

with installed fuse monitoring device,
with installed set of terminals for installing current transformers,
with installed terminal cover, with installed current transformers TTK-40/TTK-30 (KEAZ)

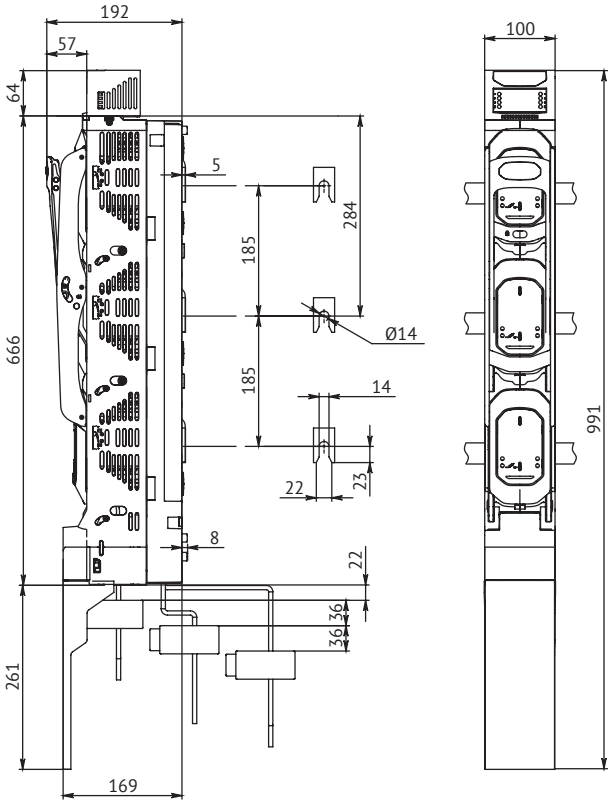

Two OptiVert-3-6

installed side by side on the busbar, connected using terminal connection kit

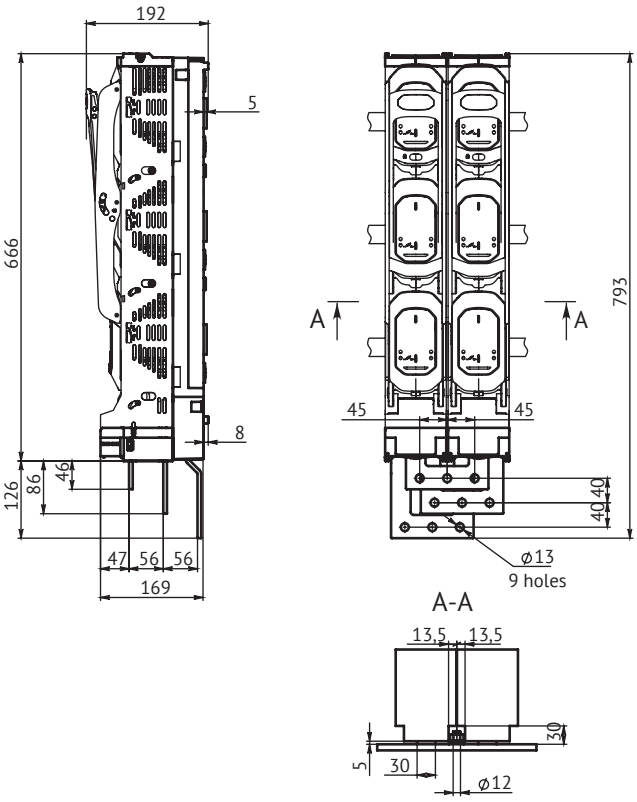

Two OptiVert-3-1

installed side by side on the busbar, connected using terminal connection kit

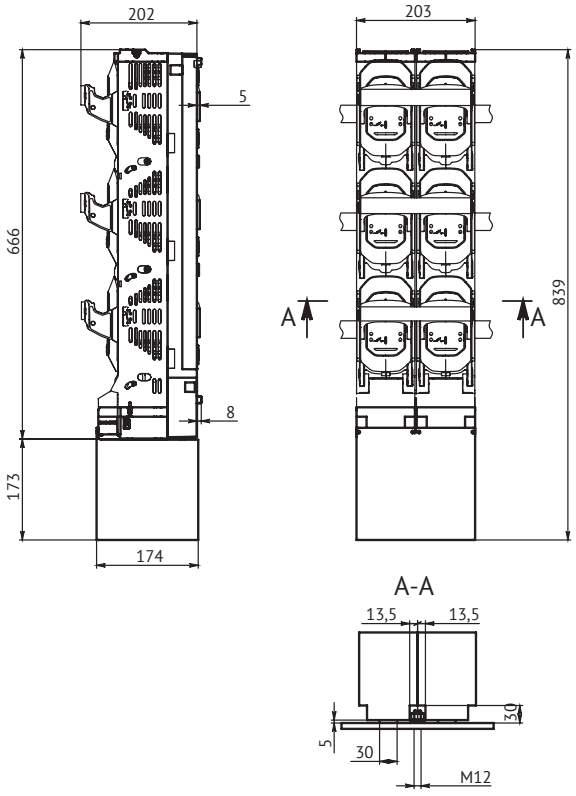

OptiSwitch DI

Switch-disconnectors 16 to 125 A

OptiSwitch DI switch-disconnectors 16 to 125 A are designed to switch on and off the power supply circuit. Load disconnectors can be used for a variety of purposes, ranging from remote power control centers to distribution boards and machine switches. These devices are also used as a general input switch in apartment and cottage distribution boards, disconnecting all internal lines and the distribution board itself from the external mains.

The reversing switch-disconnector is designed to ensure uninterrupted power supply and instant switching from the main supply line to a backup one when the power source is overloaded or during maintenance.

Designation

OptiSwitch DI - 16 - 3 C

(1) (2) (3) (4)

1	Series	OptiSwitch DI	
2	Rated current In, A	16, 25, 40, 63, 80, 100, 125	
3	Number of poles	3, 4	
4	Circuit breaker type	not specified - switch-disconnector (handle position 0-I)	C — reversing switch-disconnector (handle position I-0-II)

Series advantages

Three-pole switch-disconnectors with rated current up to 63 A occupy the space equal to two standard poles on a din-rail.

Switch-disconnectors are installed on a din-rail and removed from it without tools by slightly pressing the disconnector.

Installing and removing the fourth pole, as well as installing the neutral and ground poles, is a quick and simple operation that does not require special tools.

A double break guarantees complete de-energization of the disconnected line.

Supplied with a non-removable, ergonomic handle.

Handle lock

Items

Appearance	Code	Product name	Rated current, A	Number of poles	Weight, kg
Switch-disconnector (handle position 0-I)					
	332064	OptiSwitch DI-16-3	16	3	0,13
	332071	OptiSwitch DI-16-4		4	0,16
	332065	OptiSwitch DI-25-3	25	3	0,13
	332072	OptiSwitch DI-25-4		4	0,16
	332066	OptiSwitch DI-40-3	40	3	0,13
	332073	OptiSwitch DI-40-4		4	0,16
	332067	OptiSwitch DI-63-3	63	3	0,13
	332074	OptiSwitch DI-63-4		4	0,16
	332068	OptiSwitch DI-80-3	80	3	0,25
	332075	OptiSwitch DI-80-4		4	0,32
	332069	OptiSwitch DI-100-3	100	3	0,25
	332076	OptiSwitch DI-100-4		4	0,32
	332070	OptiSwitch DI-125-3	125	3	0,25
	332077	OptiSwitch DI-125-4		4	0,32
Reversing switch-disconnector (handle position I-0-II)					
	332078	OptiSwitch DI-16-3C	16	3	0,3
	332085	OptiSwitch DI-16-4C		4	0,4
	332079	OptiSwitch DI-25-3C	25	3	0,3
	332086	OptiSwitch DI-25-4C		4	0,4
	332080	OptiSwitch DI-40-3C	40	3	0,3
	332087	OptiSwitch DI-40-4C		4	0,4
	332081	OptiSwitch DI-63-3C	63	3	0,3
	332088	OptiSwitch DI-63-4C		4	0,4
	332082	OptiSwitch DI-80-3C	80	3	0,55
	332089	OptiSwitch DI-80-4C		4	0,62
	332083	OptiSwitch DI-100-3C	100	3	0,55
	332090	OptiSwitch DI-100-4C		4	0,62
	332084	OptiSwitch DI-125-3C	125	3	0,55
	332091	OptiSwitch DI-125-4C		4	0,62

Technical specification

Specifications in accordance with COST IEC 60947-3			Rated current In, A						
			16	25	40	63	80	100	125
Rated insulation voltage Ui, V			1500	1500	1500	1500	1500	1500	1500
Rated pulse insulation voltage Uimp, kV			4	4	4	4	8	8	8
Rated current at 40 °C Ith, A			16	25	40	63	80	100	125
Rated current Ie, A	AC-21A	415V	16	25	40	63	80	100	125
		500V	16	25	40	63	80	100	125
		690V	16	25	40	63	80	100	125
	AC-22A	415V	16	25	40	63	80	100	125
		500V	16	25	40	63	80	100	125
		690V	16	25	40	63	80	100	125
	AC-23A/B	415V	16	25	40	63	80	100	100
		500V	16	16/25	40	63	63	63	63
		690V	16	16/25	40	63	63	63	63
Rated breaking capacity at 415V, Icm, A			160	250	400	630	800	1000	1250
Rated switching capacity at 415V, Icm, A			128	200	320	504	640	800	1024
Power at AC23, kW		415V	8	11	18	29	37	46	46
		500V	8	14	22	35	35	35	35
		690V	12	19	31	48	48	48	24
Short-circuit current 1 sec, Icw, kA		400V	1,1	1,1	1,1	1,1	1,5	1,5	1,5
Additional fuse with characteristic gG, A			16	25	40	63	80	100	125
Effective short circuit current, kA			10	10	10	10	10	10	10
Mechanical life, cycles			10000	10000	10000	10000	10000	10000	10000
Electrical life, cycles			1500	1500	1500	1500	1500	1500	1500
Power loss per pole, W			0,1	0,1	0,3	0,8	1,3	2	3,1
Cross-section of connected conductors, mm^2			16	16	16	16	50	50	50
Disconnector weight (0-I), kg		3P	0,13	0,13	0,13	0,13	0,25	0,25	0,25
		4P	0,16	0,16	0,16	0,16	0,32	0,32	0,32
Reverse disconnector weight (I-0-II), kg		3P	0,3	0,3	0,3	0,3	0,55	0,55	0,55
		4P	0,4	0,4	0,4	0,4	0,62	0,62	0,62

Configuration

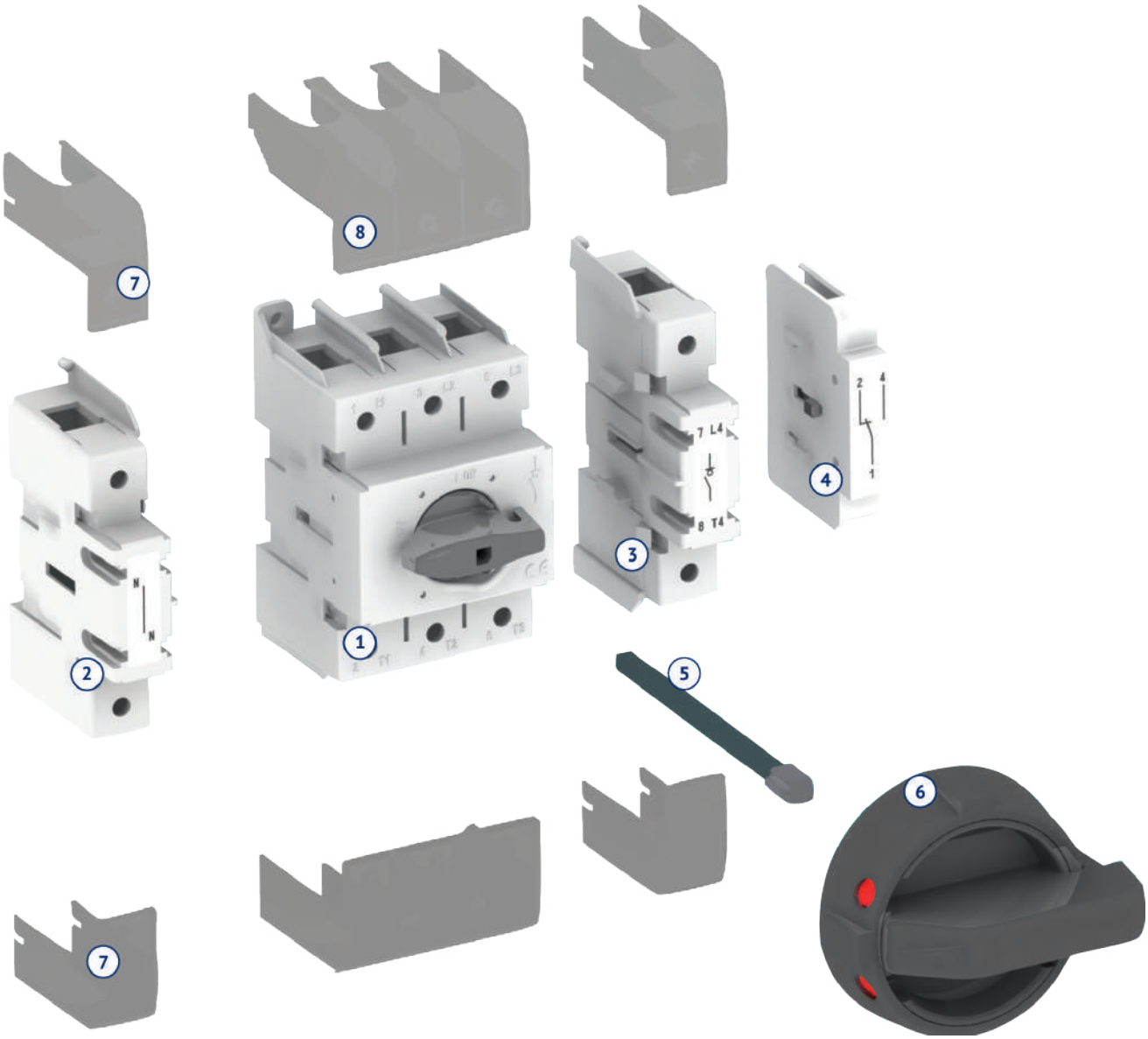

1. Switch-disconnector
2. Neutral pole
3. Fourth pole
4. Auxiliary contact
5. Shaft
6. Black handle
7. Terminal cover for the fourth pole
8. Terminal cover

The standard kit includes a switch-disconnector with a black direct-acting handle. All accessories (including the stem and handle for remote control on the distribution board) must be ordered separately.

Accessories

Appearance	Product name	Code
	Fourth pole OptiSwitch DI-16-63	332092
	Fourth pole OptiSwitch DI-80-125	332093
	Auxiliary contact OptiSwitch DI-16-125	332094
	Terminal cover OptiSwitch DI-16-63	332095
	Terminal cover OptiSwitch DI-80-125	332096
	Terminal cover for the fourth pole OptiSwitch DI-16-63	332097
	Terminal cover for the fourth pole OptiSwitch DI-80-125	332098
	Shaft OptiSwitch DI-16-125 200 mm	332099
	Shaft OptiSwitch DI-16-125 300 mm	332100
	Black handle OptiSwitch DI-16-125	332101
	Emergency handle OptiSwitch DI-16-125	332102
	Black handle OptiSwitch DI-16-125C	332103
	Neutral pole OptiSwitch DI-16-63	332104
	Neutral pole OptiSwitch DI-80-125	332105

Appearance	Product name	Code
	Earthing pole OptiSwitch DI-16-63	332106
	Earthing pole OptiSwitch DI-80-125	332107
	Red direct mounting handle OptiSwitch DI-16-63	332108
	Red direct mounting handle OptiSwitch DI-80-125	332109

Handle and stem selection

Dimension	Black handle for switch-disconnector 0-I	Emergency handle for switch-disconnector 0-I	Black handle for reverse switch-disconnector 0-I	Red direct mounting handle for switch-disconnector 0-I	Shaft 200 mm	Shaft 300 mm
OptiSwitch DI 16...63	332101	332102	332103	332108	332099	332100
OptiSwitch DI 80...125				332109		

Selection of additional accessories

Dimension	Fourth pole	Neutral pole	Grounding pole	Auxiliary contact	Terminal cover	Terminal cover for the fourth pole
OptiSwitch DI 16...63	332092	332104	332106	332094	332095	332097
OptiSwitch DI 80...125	332093	332105	332107		332096	332098

Overall dimensions (mm)

OptiSwitch DI 16-63

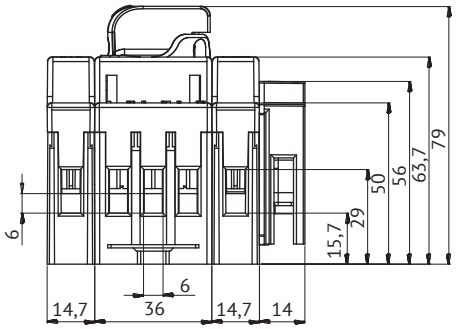

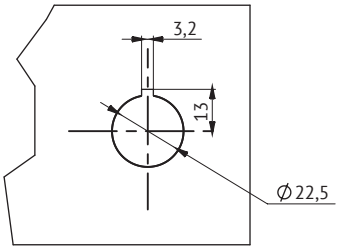

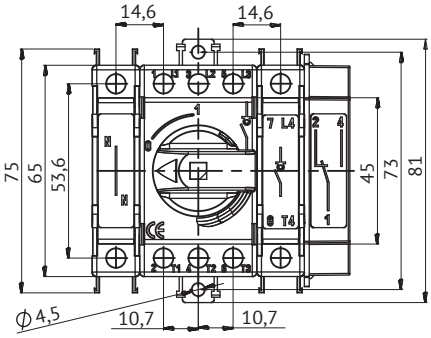

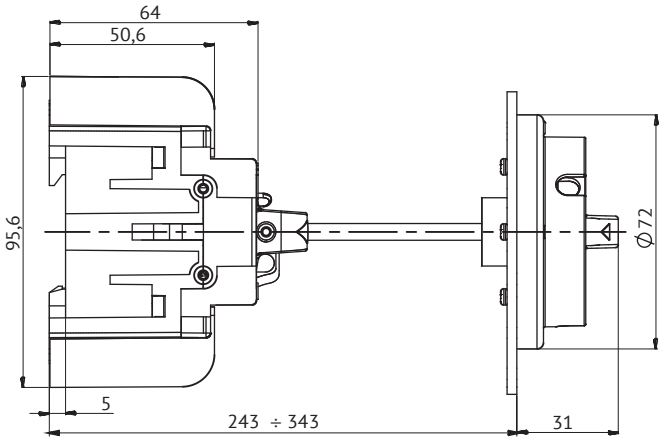

OptiSwitch DI 80-125

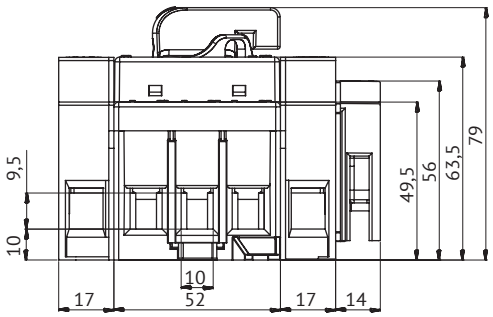

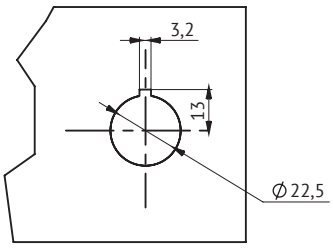

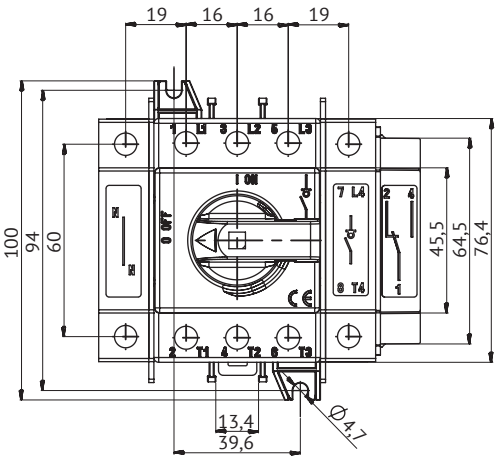

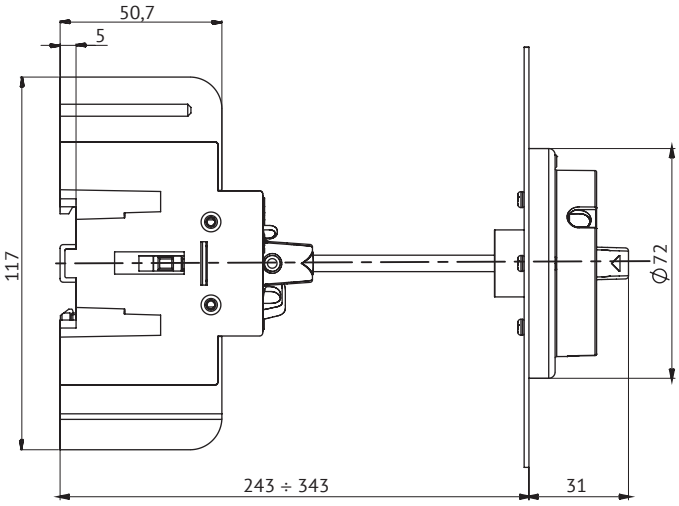

OptiSwitch DI 16-63C

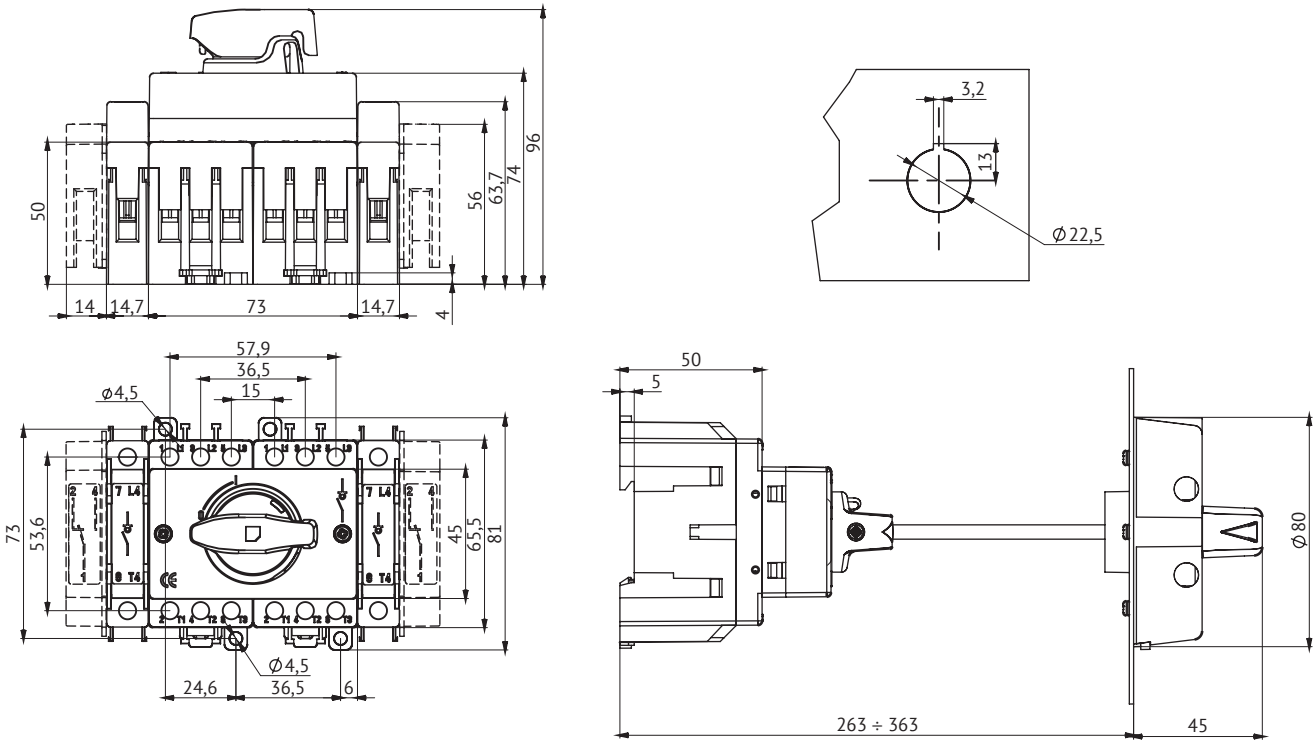

OptiSwitch DI 80-125C

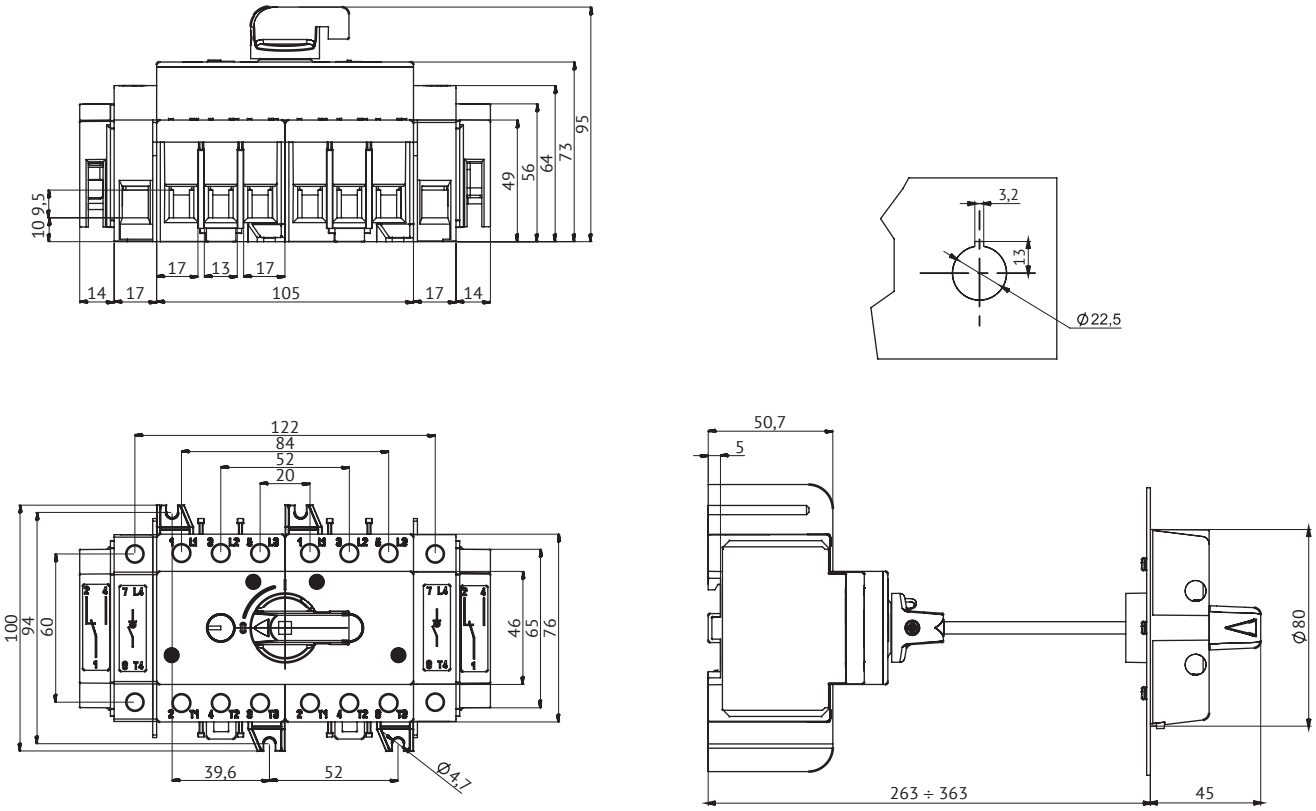

OptiSwitch DI

Load break switches and changeover switches

OptiSwitch DI are designed for switching on, off and load switching of AC and DC electrical circuits and for use in power distribution system cabinets, including main distribution boards, in complete transformer substations and other low-voltage power distribution and transmission equipment.

Selection guide

Switch–disconnector type	Load break switches		Changeover switches
Nominal current, A	25 to 125	160 to 3150	100 to 3150
Appearance			
Design	OptiSwitch DI-L	OptiSwitch DI	OptiSwitch DI-C
Scope of application			
Transformer substations	+	+	+
Main distribution board	+	+	+
Distribution boards	+	+	+
Local switchboard	+	+	+
Control switchboard	+	+	+
Manual distribution boards	+	+	+
Functions			
Emergency shutdown	+	+	+
Network connection	+	+	+
Safe load disconnection	+	+	+
Equipment control	+	+	+
Number of poles			
3P	+	+	+
Application features			
Din-rail mountable	+ *	-	-
Manual drive	+	+	+
Switching (I-0-II)	-	-	+
Break indication			
Visible break	-	+	+

* Din-rail mounting available for load switches up to 63 A
Note: All devices come complete with door handles!

OptiSwitch DI-L Miniature load break switches

OptiSwitch DI-L load break switches are designed for switching electrical circuits with rated currents from 25 to 125 A.

Designation

OptiSwitch DI - L 1 - 25 - 3P

(1) (2) (3) (4) (5)

1	Series	OptiSwitch DI		
2	Design feature	L — miniature		
3	Size	dimension 1	dimension 2	dimension 3
4	Rated operating current, A	25, 32, 40	63	100, 125
5	Number of poles	3		

Note:
All devices come complete with door handles! For direct operation it is necessary to purchase an additional accessory No. 279222.

Series advantages

Screws that do not fall out when connected.

Handle lock.

Direct operation.

Din-rail mounting.

Double break.

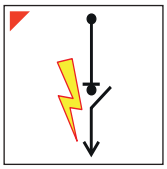

High breaking capacity, wide range of use — application category AC-21, AC-22, AC-23.

Items

	Rated current In, A	Product name	Code	Weight, kg
	25	OptiSwitch DI-L1-25-3P	274881	0,2
	32	OptiSwitch DI-L1-32-3P	274882	0,2
	40	OptiSwitch DI-L1-40-3P	274883	0,2
	63	OptiSwitch DI-L2-63-3P	274884	0,3
	100*	OptiSwitch DI-L3-100-3P	279940	0,3
	125*	OptiSwitch DI-L3-125-3P	279941	0,3

* No din-rail mounting
Codes indicated in the chapter's tables can be changed. If you did not find the necessary codes on the website, please call KEAZ customer service.

Technical specification

Dimension			DI-L1			DI-L2	DI-L3	
Rated current In, A			25	32	40	63	100	125
Rated insulation voltage Ui, V			750	750	750	750	750	750
Rated impulse withstand voltage Uimp, kV			4	4	4	4	4	4
Minimum conductor cross-section, mm			4	6	10	16	35	50
Rated operating current Ie, A	AC-21A	415V	25	32	40	63	100	125
		440-690V	25	32	40	63	100	125
	AC-22A	Up to 415V	25	32	40	63	100	125
		440-500V	-	-	-	-	-	-
		690V	-	-	-	-	-	-
	AC-23A	Up to 415V	25	32	40	40	75	75
		440V	20	25	25	40	50	63
		500V	20	20	25	32	50	63
		690V	11	20	20	20	40	50
Rated breaking capacity, AC-23		Up to 415V	200	256	320	320	600	600
		440V	160	200	200	320	400	504
		500V	160	160	200	256	400	504
		690V	88	160	160	160	320	400
		1000V	-	-	-	-	-	-
Rated breaking capacity (DC) DC-23/number of poles		Up to 48V	100/3	128/3	160/3	252/3	300/3	300/3
		110V	-	-	-	140/3	200/3	200/3
		220V	-	-	-	100/3	200/3	200/3
Rated short-time permissible current Icw, kA		690V, 0,2s	1	1	1	2	5	5
		690V, 1s	0,5	0,5	0,5	1	2,5	2,5
Rated maximum switching capacity Icm, kA		690В/500V	0,7	0,7	0,7	1,4	3,6	3,6
Mechanical life		ON/OFF cycle	10000	10000	10000	10000	10000	10000
Electrical life		ON/OFF cycle	2000	2000	2000	2000	2000	2000
Weight with handle and stem		kg	0,2	0,2	0,2	0,3	0,3	0,3
Operating torque (for handle)		N·m	1	1	1	1,2	2	2

Overall dimensions (mm)

OptiSwitch DI-L1

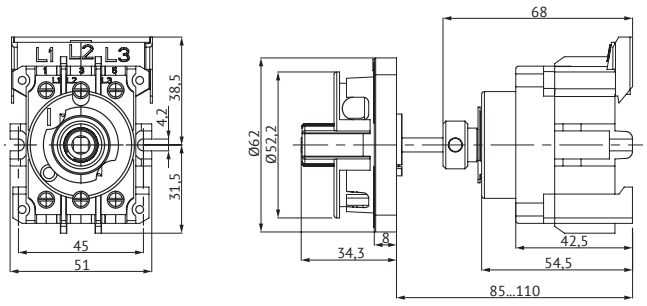

OptiSwitch DI-L2-63

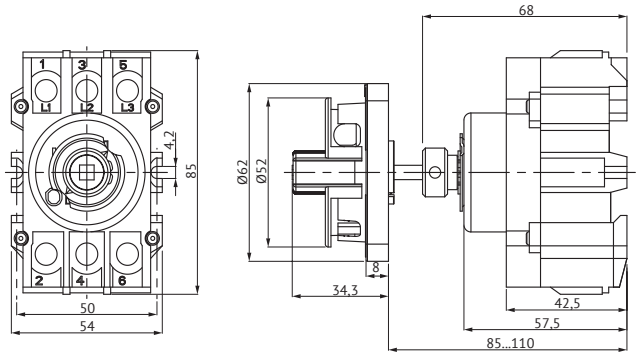

OptiSwitch DI-L3-(100-125A)

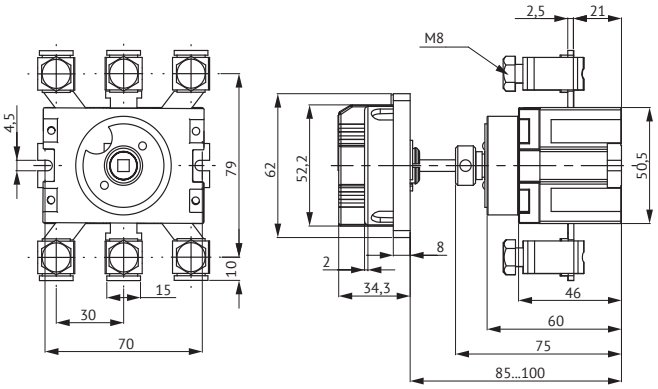

Accessories

Appearance	Product name	Code
	Handle OptiSwitch DI-25~125A	275128
	Direct operating handle OptiSwitch DI-25~125A	279222
	Stem OptiSwitch DI-25~125A-5x70mm	275131

OptiSwitch DI Load break switches with visible break

OptiSwitch DI load break switches are designed for switching electrical circuits for rated currents from 160 to 3150 A with a visible break.

Designation

OptiSwitch DI - 2 - 250 - 3P

1 2 3 4

1	Series	OptiSwitch DI					
2	Size	1	2	3	4	5	6
3	Rated operating current, A	160	200, 250, 315	400, 630, 800	1000, 1250	1600, 1800, 2000	2500, 3150
4	Number of poles	3					

Note: All devices come complete with door handles!

Series advantages

Safety of operating personnel: visible open circuit, self-cleaning contacts.

Handle lock.

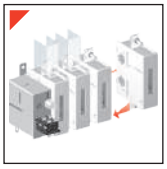

Modular system.

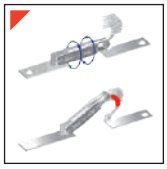

Arc quench chambers.

Stem height adjustment.

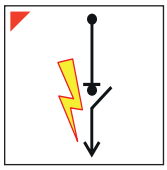

High breaking capacity AS-22, AS-23.

Items

Appearance	Rated current In, A	Product name	Code	Weight, kg
	160	OptiSwitch DI-1-160-3P	275542	1,8
	200	OptiSwitch DI-2-200-3P	274891	3
	250	OptiSwitch DI-2-250-3P	274887	3
	315	OptiSwitch DI-2-315-3P	274888	3
	400	OptiSwitch DI-3-400-3P	274889	5,2
	630	OptiSwitch DI-3-630-3P	274890	6,2
	800	OptiSwitch DI-3-800-3P	275543	6,2
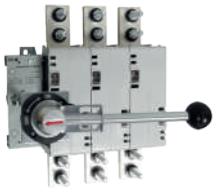	1000	OptiSwitch DI-4-1000-3P	274892	16,3
	1250	OptiSwitch DI-4-1250-3P	275544	16,3
	1600	OptiSwitch DI-5-1600-3P	274893	17,5
	1800	OptiSwitch DI-5-1800-3P	275545	17,5
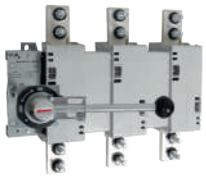	2000	OptiSwitch DI-5-2000-3P	275546	35
	2500	OptiSwitch DI-6-2500-3P	275547	37
	3150	OptiSwitch DI-6-3150-3P	275548	37

Technical specification

Dimension			DI-1	DI-2			DI-3			DI-4		DI-5			DI-6	
Rated current In, A			160	200	250	315	400	630	800	1000	1250	1600	1800	2000	2500	3150
Rated insulation voltage Ui, V			1000	1000	1000	1000	1000	1000	1000	1000	1000	1000	1000	1000	1000	1000
Rated impulse withstand voltage Uimp, kV			8	12	12	12	12	12	12	12	12	12	12	8	8	8
Minimum conductor cross-section, mm			70	95	120	185	240	2x185	2x240	2x (60x5)	2x (80x5)	2x (100x5)	3x (100x5)	3x (100x5)	4x (100x5)	3x (100x10)
Rated operating current Ie, A	AC-21A	415V	160	200	250	315	400	630	800	1000	1250	1600	1800	20001)	25001)	31501)
		440-690V	160	200	250	315	400	630	800	1000	1250	1600	1800	20001)	25001)	31501)
	AC-22A	415V	160	200	250	315	400	630	800	1000	1250	1600	1600	16001)	16001)	16001)
		440-690V	160	200	250	315	400	630	800	1000	1250	1600	1600	16001)	16001)	16001)
	AC-23A	415V	160	200	250	315	400	630	720	1000	1000	1000	1000	1000	1000	1000
		440V	100	200	250	315	400	590	670	-	-	-	-	-	-	-
		500V	100	200	250	315	400	580	600	-	-	-	-	-	-	-
		690V	80	200	250	315	350	350	350	-	-	-	-	-	-	-
Rated limiting breaking capacity, AC-23, A		415V	1280	1600	2000	2520	3200	5040	5760	8000	8000	8000	8000	8000	8000	8000
		440V	800	1600	2000	2520	3200	4720	5360	-	-	-	-	-	-	-
		500V	800	1600	2000	2520	3200	4640	4800	-	-	-	-	-	-	-
		690V	640	1600	2000	2520	2800	2800	2800	-	-	-	-	-	-	-
Rated breaking capacity (DC) DC-23/number of poles, A		Up to 48V	640/2	800/2	1000/2	1260/2	-	-	-	-	-	-	-	-	-	-
		110V	640/3	800/2	1000/2	1260/2	-	-	-	-	-	-	-	-	-	-
		220V	640/3	800/2	1000/2	1260/2	-	-	-	-	-	-	-	-	-	-
		440V	-	800/3	1000/3	1260/3	-	-	-	-	-	-	-	-	-	-
		750V	-	800/4	1000/4	1260/4	-	-	-	-	-	-	-	-	-	-
Rated short-time permissible current Icw, kA		690V, 0,2s	8	17,5	17,5	17,5	38	38	38	100	100	100	100	110	110	110
		690V, 1s	5	8	8	8	17	17	17	50	50	50	50	80	80	80
Rated maximum switching capacity Icm, kA		690V/500V	7	35	35	35	65	80	80	105	105	105	105	105/140	105/140	105/140
Mechanical life		ON/OFF cycle	10000	8000	8000	8000	5000	5000	5000	3000	3000	3000	3000	600	600	600
Electrical life		ON/OFF cycle	1000	1000	1000	1000	1000	1000	500	500	500	500	500	100	100	100
Weight with handle and stem, kg			1,8	3	3	3	5,2	6,2	6,2	16,3	16,3	17,5	17,5	35	37	37
Operating torque (for handle), N·m			2,5	8,2	8,2	8,2	17	21	21	21	21	21	21	50	50	50

Overall dimensions (mm)

OptiSwitch DI-1-160A

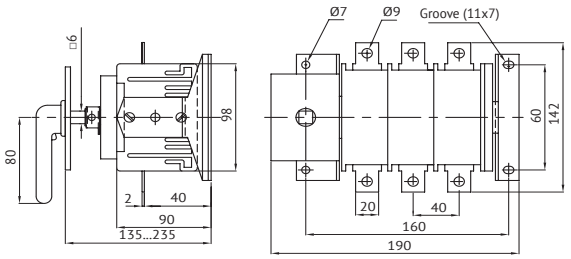

OptiSwitch DI-2-(200-315A)

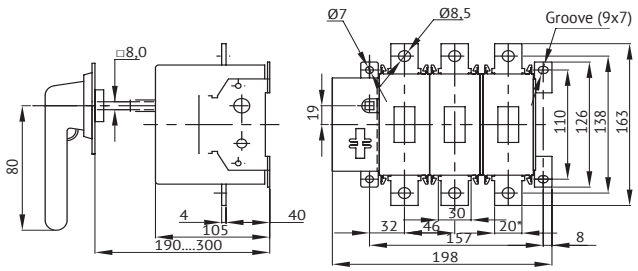

* for 200 A - 20 mm
for 250-315 A - 25 mm

OptiSwitch DI-3-(400-800A)

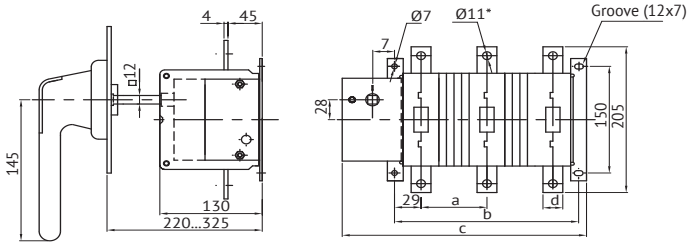

* for 630-800 A - Ø13.5

Size	OptiSwitch DI-3-400	OptiSwitch DI-3-630	OptiSwitch DI-3-800
a	46	62	70
b	151	183	199
c	211	244	260
d	25	40	40

OptiSwitch DI-4-(1000-1250A)

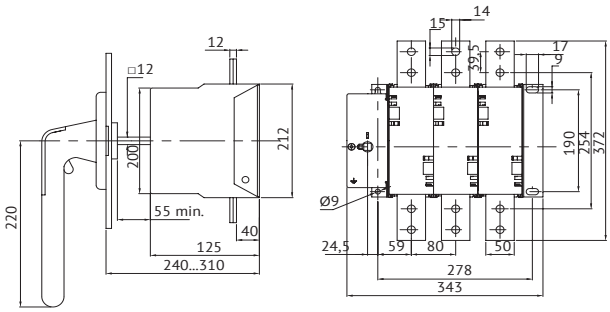

OptiSwitch DI-5-(1600-1800A)

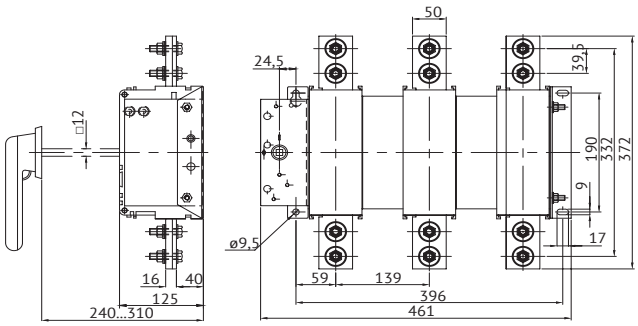

OptiSwitch DI-5-2000-3P, OptiSwitch DI-6

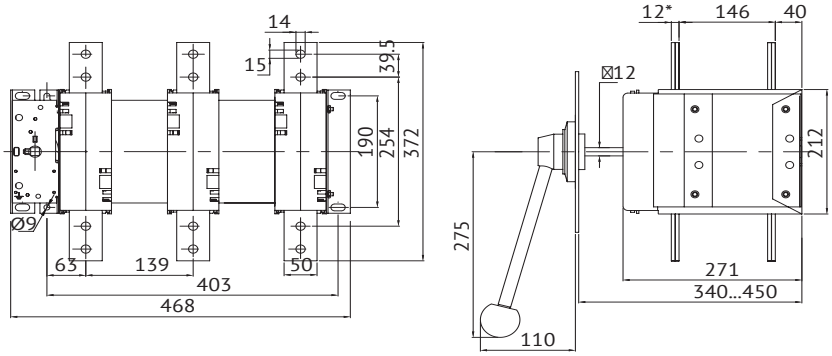

* for 3150 A - 16 mm

Accessories

Appearance	Product name	Size	Code
	Handle mounting device OptiSwitch DI-200-400A	DI-2/DI-3	275121
	Handle mounting device OptiSwitch DI-630-800A	DI-3	275120
	Handle mounting device OptiSwitch DI-1000-1600A	DI-4/DI-5	275122
	Extended terminals OptiSwitch DI-125-160A	DI-1	275118
	Extended terminals OptiSwitch DI-200-400A	DI-2/DI-3	275119
	Compact handle OptiSwitch DI-200-315A	DI-2	275562
	Handle OptiSwitch DI-200-800A 145 mm	DI-2/DI-3	275126
	Handle OptiSwitch DI-1000-3150A 220 mm	DI-4/DI-5/DI-6	275127
	Handle OptiSwitch DI-2000-3150A 300 mm	DI-6	275123
	Stem OptiSwitch DI-125-160A 165 mm	DI-1	275132
	Stem OptiSwitch DI-200-400A 240 mm	DI-2/DI-3	275133
	Stem OptiSwitch DI-630-1600A 255 mm	DI-3/DI-4/DI-5	275129
	Stem OptiSwitch DI-2500-3150A 325 mm	DI-6	275130

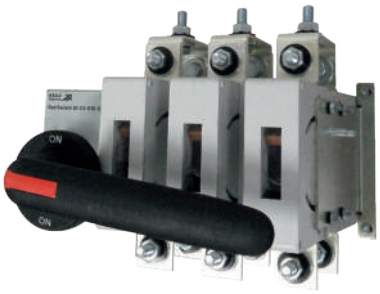

OptiSwitch DI-C Changeover switches with visible break

OptiSwitch DI-C changeover switches are designed for switching electrical circuits for rated currents from 100 to 3150 A with a visible break.

Designation

OptiSwitch DI - C 2 - 250 - 3P

(1) (2) (3) (4) (5)

1	Series	OptiSwitch DI					
2	Number of switching directions	C — 2 directions (changeover switch)					
3	Size	1	2	3	4	5	6
4	Rated operating current, A	100, 125, 160	200, 250, 315	400, 630, 800	1000, 1250	1600, 2000	2500, 3150
5	Number of poles	3					

Series advantages

Safety of operating personnel: visible open circuit, self-cleaning contacts.

Handle lock.

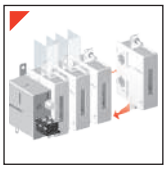

Modular system.

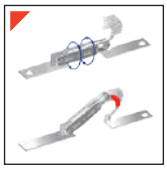

Arch quench chambers.

Stem height adjustment.

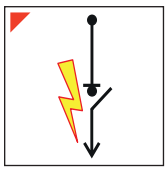

High breaking capacity AS-22, AS-23.

Items

Appearance	Rated current In, A	Product name	Code
	100	OptiSwitch DI-C1-100-3P	275549
	125	OptiSwitch DI-C1-125-3P	275550
	160	OptiSwitch DI-C1-160-3P	274897
	200	OptiSwitch DI-C2-200-3P	275551
	250	OptiSwitch DI-C2-250-3P	274898
	315	OptiSwitch DI-C2-315-3P	275552
	400	OptiSwitch DI-C3-400-3P	275553
	630	OptiSwitch DI-C3-630-3P	274899
	800	OptiSwitch DI-C3-800-3P	275554
	1000	OptiSwitch DI-C4-1000-3P	275555
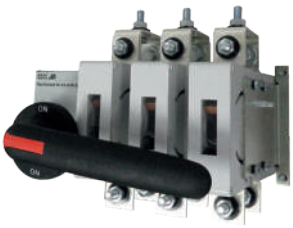	1250	OptiSwitch DI-C4-1250-3P	275556
	1600	OptiSwitch DI-C5-1600-3P	275557
	2000	OptiSwitch DI-C5-2000-3P	275558
	2500	OptiSwitch DI-C6-2500-3P	275559
	3150	OptiSwitch DI-C6-3150-3P	275560

Technical specification

Dimension		DI-C1			DI-C2			DI-C3			DI-C4		DI-C5		DI-C6	
Rated current, A		100	125	160	200	250	315	400	630	800	1000	1250	1600	2000	2500	3150
Rated insulation voltage Ui, V		1000	1000	1000	1000	1000	1000	1000	1000	1000	1000	1000	1000	1000	1000	1000
Maximum operating voltage Uemax, kV		690	690	690	690	690	690	690	690	690	690	690	690	690	690	690
Insulation strength, kV		3,5	3,5	3,5	3,5	3,5	3,5	3,5	3,5	3,5	3,5	3,5	3,5	3,5	3,5	3,5
Rated impulse withstand voltage Uimp, kV		8	8	8	12	12	12	12	12	12	8	8	8	8	8	8
Rated operating current Ie at 415V, A	AC-22A	100	125	160	200	250	315	400	630	800	1000	1250	1600	1600	1600	1600
	AC-23A	100	125	160	200	250	315	400	630	720	1000	1000	1000	-	-	-
Rated switching capacity (415V, pf 0.35) AC-23A, A		1000	1250	1600	2000	2500	3150	4000	6300	7200	10000	10000	10000	-	-	-
Rated breaking capacity (415V, pf 0.35) AC-23A, A		800	1000	1280	1600	2000	2520	3200	5040	5760	8000	8000	8000	-	-	-
Rated maximum switching capacity AC-23A, kA		7	7	7	35	35	35	65	80	80	105	105	105	-	-	-
Rated short-time permissible current (1 sec), kA		5	5	5	8	8	8	17	17	17	50	50	50	-	-	-
Electrical life	ON/OFF cycle	2000	1000	1000	1000	1000	1000	1000	1000	500	500	500	500	100	100	100
Mechanical life	ON/OFF cycle	10000	10000	10000	8000	8000	8000	5000	5000	5000	3000	3000	3000	1200	1200	1200

Overall dimensions (mm)

OptiSwitch DI-C1-(100-160A)

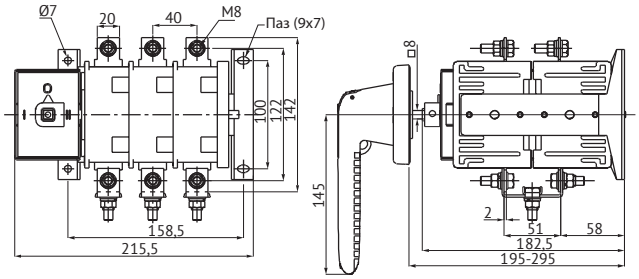

OptiSwitch DI-C2-(200-315A)

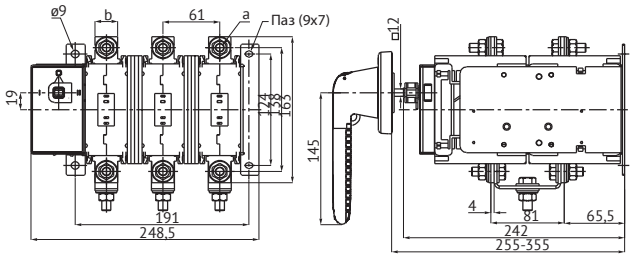

Size	OptiSwitch DI-C2-200	OptiSwitch DI-C2-250	OptiSwitch DI-C2-315
a	M8	M10	M10
b	20	25	25

OptiSwitch DI-C3-(400-800A)

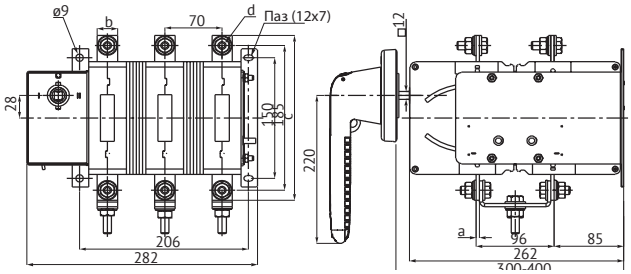

Size	OptiSwitch DI-C3-400	OptiSwitch DI-C3-630	OptiSwitch DI-C3-800
a	4	4	5
b	25	40	40
c	205	223	223
d	M10	M12	M12

OptiSwitch DI-C4, OptiSwitch DI-C5-1600

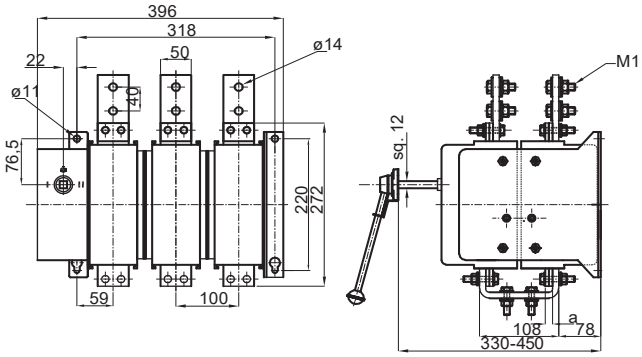

Size	OptiSwitch DI-C4-1000	OptiSwitch DI-C4-1250	OptiSwitch DI-C5-1600
a	12	12	16

OptiSwitch DI-C5, OptiSwitch DI-C6

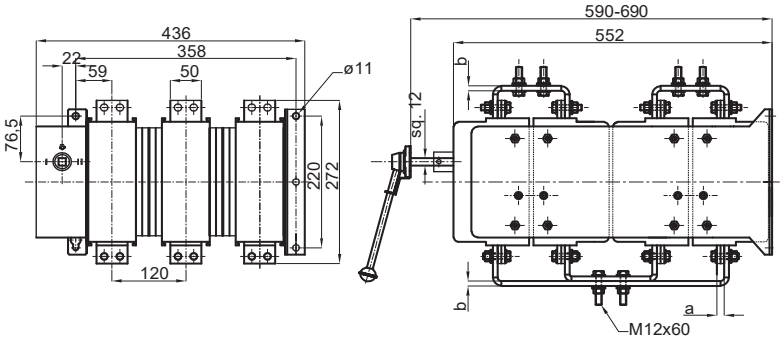

Size	OptiSwitch DI-C5-2000	OptiSwitch DI-C5-2500	OptiSwitch DI-C6-3150
a	12	12	16
b	8	10	16(8x2)

Accessories

Appearance	Product name	Dimension	Code
	Handle mounting device OptiSwitch DI-200-400A	DI-C2/DI-C3	275121
	Handle mounting device OptiSwitch DI-630-800A	DI-C3	275120
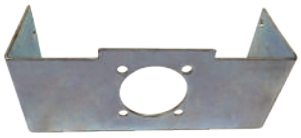	Handle mounting device OptiSwitch DI-1000-1600A	DI-C4/DI-C5	275122
	Extended terminals OptiSwitch DI-125-160A	DI-C1	275118
	Extended terminals OptiSwitch DI-200-400A	DI-C2/DI-C3	275119
	Compact handle OptiSwitch DI-200-315A	DI-C2	275562
	Handle OptiSwitch DI-200-800A 145 mm	DI-C2/DI-C3	275126
	Handle OptiSwitch DI-1000-3150A 220 mm	DI-C4/DI-C5/DI-C6	275127
	Handle OptiSwitch DI-2000-3150A 300 mm	DI-C6	275123
	Stem OptiSwitch DI-125-160A 165 mm	DI-C1	275132
	Stem OptiSwitch DI-200-400A 240 mm	DI-C2/DI-C3	275133
	Stem OptiSwitch DI-630-1600A 255 mm	DI-C3/DI-C4/DI-C5	275129
	Stem OptiSwitch DI-2500-3150A 325 mm	DI-C6	275130
	Module OptiSwitch DI-160A	DI-C1	275109
	Module OptiSwitch DI-200A	DI-C2	275110
	Module OptiSwitch DI-250A	DI-C2	275111
	Module OptiSwitch DI-315A	DI-C2	275112
	Module OptiSwitch DI-400A	DI-C3	275113
	Module OptiSwitch DI-630A	DI-C3	275114
	Module OptiSwitch DI-1000A	DI-C4	275115
	Module OptiSwitch DI-1600A	DI-C5	275116

OptiSwitch 4G

Cam switches

OptiSwitch 4G switches are designed for connection, disconnection and transfer of loads in AC and DC circuits and for use in power distribution cabinets, including MDBs, in packaged transformer substations and other low-voltage power distribution and transmission equipment.

Designation

OptiSwitch 4G 25 - 10 M - U - S5- 2 - R114

(1) (2) (3) (4) (5) (6) (7) (8) (9)

1	Series	OptiSwitch				
2	Configuration	4G				
3	Rated operating current	10 — 10 A, 16 — 16 A, 25 — 25 A, 40 — 40 A, 63 — 63 A, 80 — 80 A, 63/100 — 100 A				
4	Switching program diagram number	See list of standard diagrams on page 281				
5	Standard circuitry modifications	M				
6	Design option	U — open	OU — open with back wall mounting	PK — closed		
7	A symbol of a special design option to be added to the type designation	S1, S5, S6, S7, S8, S18, S24, S25				
8	Locking position for design option S5 *	0 to 12				
9	Handle type (color and design option) **	R012 (red)	R014 (black)	R112 (red)	R114 (black)	R212 (red)	R214 (black)

* The default is locking in «0» position and is not indicated in the switch description.
** For design options S5, S6, S24 and S25, the handle type is not specified.

WARNING! This catalog is designed to facilitate the selection of switches. It contains the most popular schemes AND is continuously updated. If the necessary circuit switching scheme is not shown above, contact us to assist in selecting the appropriate switch.

Selection guide

Cam switches are classified in three groups by sizes. The switches of each group have the same handles, front panels and mounting hole locations and dimensions.

Group	A0	A1		A2			
Switch type	4G10	4G16	4G25	4G40	4G63	4G80	4G63/100
Rated operating current Ie, A	10	16	25	40	63	80	100

Parameter			
Design option	U	OU	PK
Description	Open design option	Open design option with back wall mounting	Closed design option (in enclosure)
Rated currents In, A	10, 16, 25, 40, 63, 80, 100		
Rated voltages Un, V	up to 690AC/440DC		
Dimension group	A0, A1, A2		
Maximum number of units	12 for A0, A1; 10 for A2		4
Number of switching positions	up to 12		
Switching angle increments, °C	30, 45, 60, 90 для A0, A1; 06, 90 for A2		
Front panel IP rating	IP44, IP65		IP65
Connection side IP rating	IP 20 (except for 100 A — IP00)		IP65
Mounting method	front flange mounting, installed behind a max. 6 mm panel	screwed base, panel-mounted inside a cabinet	mounting on enclosure
Handle color	R012 (red)	R112 (red)	R212 (red)
	R014 (black)	R114 (black)	R214 (black)

Series advantages

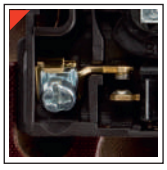

Silver-bearing solder provides high permeability and wear resistance of contacts.

The switch design can service up to 24 circuits.

With IP65 protection rating OptiSwitch 4G switches can be used outdoors.

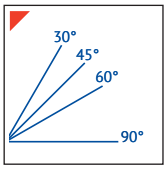

The switch handle rotation angles are 30°, 45°, 60°, 90°.

Using a key or padlock prevents unauthorized operation of the switch.

Metal shaft guarantees reliable switching.

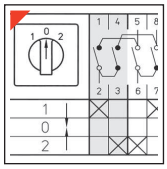

The switches for non-standard circuits can be manufactured on request.

Convenient location of clamps (at 45°) and captive terminal screws facilitate installation.

Special design options

Special design option	Appearance	Special design option, specifications	Notes
S1		Sealed coupling Front panel protection rating: IP65 Group: A0, A1, A2 Design option: U, OU	The difference between the standard and special design options is that the special option S1 includes an O-ring on the drive rod and a front panel seal that ensure IP65 protection rating.
S5		Cylindrical lock Group: A0, A1 Design option: U, OU, PK	The key is used as a handle. Locking positions are according to the purchase order.
S6		Lock (lockable with a padlock). Lock hole diameter is 8 mm. Group: A0, A1, A2 Design option: U, OU, PK	With a padlock installed you can lock the switch in a certain position. The padlock is not included in the package.
S7		Door connection. Rod length is 360 mm Group: A2 Design option: OU	The switch is mounted on the back wall of the enclosure or on the cabinet door. The handle with the front panel is located on the enclosure or door. The drive rod can be extended and sealed.
S8		Door connection with lock. Rod length is 360 mm Lock hole diameter is 8 mm. Group: A2 Design option: OU	It combines specifications of design option S7 with an additionally capability to lock the switch in a certain position preventing the door from opening.
S18		Bus-mounted switch (din-rail) Group: A0, A1 Design option: OU, U	The switch can be mounted on a DIN rail (according to din En 50022)
S24		Emergency button Group: A0, A1, A2 Design option: U, OU	The option with a yellow index board and a red handle
S25		Main emergency switch. Lock hole diameter is 8 mm. Group: A0, A1, A2 Design option: U, OU, PK	The design option with a yellow front panel, a red handle and a padlock locking function.

Items

Rated current, A	Product name	Code
10	OptiSwitch 4C10-107-U-R014	138261
	OptiSwitch 4C10-10-PK-R014	138262
	OptiSwitch 4C10-10-U-R014	138249
	OptiSwitch 4C10-11-PK-R014	138263
	OptiSwitch 4C10-11-U-R014	138250
	OptiSwitch 4C10-51-U-R014	138252
	OptiSwitch 4C10-52-U-R014	138251
	OptiSwitch 4C10-53-PK-R014	138264
	OptiSwitch 4C10-53-U-R014	138253
	OptiSwitch 4C10-54-U-R014	138254
	OptiSwitch 4C10-56-U-R014	138255
	OptiSwitch 4C10-66-U-R014	138256
	OptiSwitch 4C10-69-U-R014	138257
	OptiSwitch 4C10-75-U-R014	138258
	OptiSwitch 4C10-91-PK-R014	138265
	OptiSwitch 4C10-91-U-R014	138259
	OptiSwitch 4C10-92-U-R014	138260
16	OptiSwitch 4C16-108-U-R114	138269
	OptiSwitch 4C16-10-PK-R114	138274
	OptiSwitch 4C16-10-U-R114	138266
	OptiSwitch 4C16-11-PK-R114	138275
	OptiSwitch 4C16-53-PK-R114	138276
	OptiSwitch 4C16-53-U-R114	138267
	OptiSwitch 4C16-83-U-R114	138268
	OptiSwitch 4C16-91-PK-R114	138277
25	OptiSwitch 4C25-108-U-R114	138273
	OptiSwitch 4C25-10-PK-R114	138278
	OptiSwitch 4C25-10-U-R114	138270
	OptiSwitch 4C25-11-PK-R114	138279
	OptiSwitch 4C25-53-PK-R114	138280

Rated current, A	Product name	Code
25	OptiSwitch 4C25-53-U-R114	138271
	OptiSwitch 4C25-83-U-R114	138272
	OptiSwitch 4C25-91-PK-R114	138281
40	OptiSwitch 4C40-10-PK-R214	138286
	OptiSwitch 4C40-10-U-R214	138282
	OptiSwitch 4C40-12-PK-R214	138287
	OptiSwitch 4C40-51-PK-R214	138288
	OptiSwitch 4C40-51-U-R214	138283
	OptiSwitch 4C40-53-PK-R214	138289
	OptiSwitch 4C40-53-U-R214	138284
	OptiSwitch 4C40-91-U-R214	138285
63	OptiSwitch 4C63-10-PK-R214	138294
	OptiSwitch 4C63-10-U-R214	138290
	OptiSwitch 4C63-12-PK-R214	138295
	OptiSwitch 4C63-51-PK-R214	138296
	OptiSwitch 4C63-51-U-R214	138291
	OptiSwitch 4C63-53-PK-R214	138297
	OptiSwitch 4C63-53-U-R214	138292
	OptiSwitch 4C63-91-U-R214	138293
80	OptiSwitch 4C80-10-PK-R214	138302
	OptiSwitch 4C80-10-U-R214	138298
	OptiSwitch 4C80-12-PK-R214	138303
	OptiSwitch 4C80-51-PK-R214	138304
	OptiSwitch 4C80-51-U-R214	138299
	OptiSwitch 4C80-53-PK-R214	138305
	OptiSwitch 4C80-53-U-R214	138300
	OptiSwitch 4C80-91-U-R214	138301
100	OptiSwitch 4C63/100-10-U-R214	138306
	OptiSwitch 4C63/100-53-U-R214	138307

The codes in the tables of this chapter can be changed. If you did not find the necessary codes on the website, please contact KEAZ customer service.

Technical specification

Parameters		Switch type						
		4C10	4C16	4C25	4C40	4C63	4C80	4C63/100
Rated insulation voltage Ui, V		690	690	690	690	690	690	690
Rated operating current Ie, A		10	16	25	40	63	80	100
Conventional free air thermal current Ith, A		16	20	25	50	63	80	125
Nominal conventional short-circuit current at rated current of the fuse, A	6 kA eff.	25	35	35	-	-	-	-
	15 kA eff.	-	-	-	63	63	80	125
Mechanical wear resistance (number of switching operations)		$3x10^6$	$3x10^6$	$3x10^6$	$3x10^6$	$3x10^6$	$3x10^6$	$3x10^6$
Connection bolts		M4	M4	M4	M5	M5	M5	M6
Max. size of connecting wires, mm^2		2x1,5	2x4	2x4	2x10	2x10	2x10	35
Rated short-time withstand current (for 1 second), A		350	500	500	800	800	800	1300
Peak value of the short-term withstand current, A		700	1100	1100	1600	1600	1600	2600
Rated short-circuit making capacity, A		250*	300	300	500	500	500	800
Three-phase switching power at 400...690 V, kW	AC-23A	7,5	12	15	22	30	30	45
	AC-3	5,5	8	13	22	30	30	37
	Switch AC-3 Y/Δ	7,5	12	15	22	30	30	-

*cosφ = 0,65

Using direct current switches

The switchable DC currents depend significantly on the switching speed. As the voltage increases, the number of contacts connected in series should be also increased.

				4C10	4C16	4C25	4C40	4C63	4C80	4C63/100
Rated operating current (Ie), A	DC-21 t=1 ms	24–48 DC	2 in series	10	16	25	40	63	63	-
		110 DC	3 in series	6	10	15,5	25	35	35	-
		220 DC	6 in series	5	8	12,5	20	32	32	-
	DC-23 t=1 ms	24–48 DC	2 in series	6	10	15,5	25	35	35	-
		110 DC	3 in series	5	8	12,5	20	25	25	-
		220 DC	6 in series	4	6	9,3	16	22	22	-
	DC-13 t=1 ms	24–48 DC	2 in series	5	8	12,5	-	-	-	-
		110 DC	3 in series	2,5	4	6,25	-	-	-	-
		220 DC	6 in series	1,2	2	3,1	-	-	-	-

Weight (kg)

Design option		U, OU			PK		
Rated current		10 A	16–25 A	40–80 A	10 A	16–25 A	40–80 A
Number of packets	1	0,10	0,18	0,36	0,27	0,32	0,94
	2	0,13	0,21	0,44	0,29	0,34	1,02
	3	0,15	0,25	0,52	0,32	0,39	1,10
	4	0,18	0,28	0,60	0,33	0,41	1,18
	5	0,20	0,32	0,68	-	-	-
	6	0,22	0,36	0,76	-	-	-
	7	0,25	0,39	0,84	-	-	-
	8	0,28	0,42	0,92	-	-	-
	9	0,30	0,46	1,00	-	-	-
	10	0,33	0,50	1,08	-	-	-
	11	0,35	0,54	-	-	-	-
	12	0,38	0,58	-	-	-	-

Selecting switches for motors

The switching capacity of contacts depends on load conditions, operating category AC 1 where the on and off currents are the same and are equal to the rated current. The switching durability for the switches up to 4G 63 is 1 million switching operations.
In more severe operating conditions, the switching capacity will deteriorate. The diagram below is intended to help in selection of switches for motors depending on voltage, motor power, number of switching operations per hour (switch/h) and operating conditions.

Example. Select a cam switch for direct switching on and braking by reverse current of a squirrel cage motor with a power of 7 kW, 380 V at 30 switching operations per hour:
1. Operation category AC 4;
2. Find the number of switching operations in the diagram: 30 switch/hour (in the top of the diagram);
3. From the point found, draw a horizontal line to its intersection with the line of the corresponding operation category (AC 4);
4. At the bottom of the diagram, on the scale for the corresponding voltage, find the engine power value (7 kW, 380 V) and draw a horizontal line;
5. From the point of intersection of the upper horizontal line with the line corresponding to operation category, draw a vertical line (down);
6. The intersection point of the lower horizontal and vertical lines will be in the area of the operation of the required switch (4G 40).

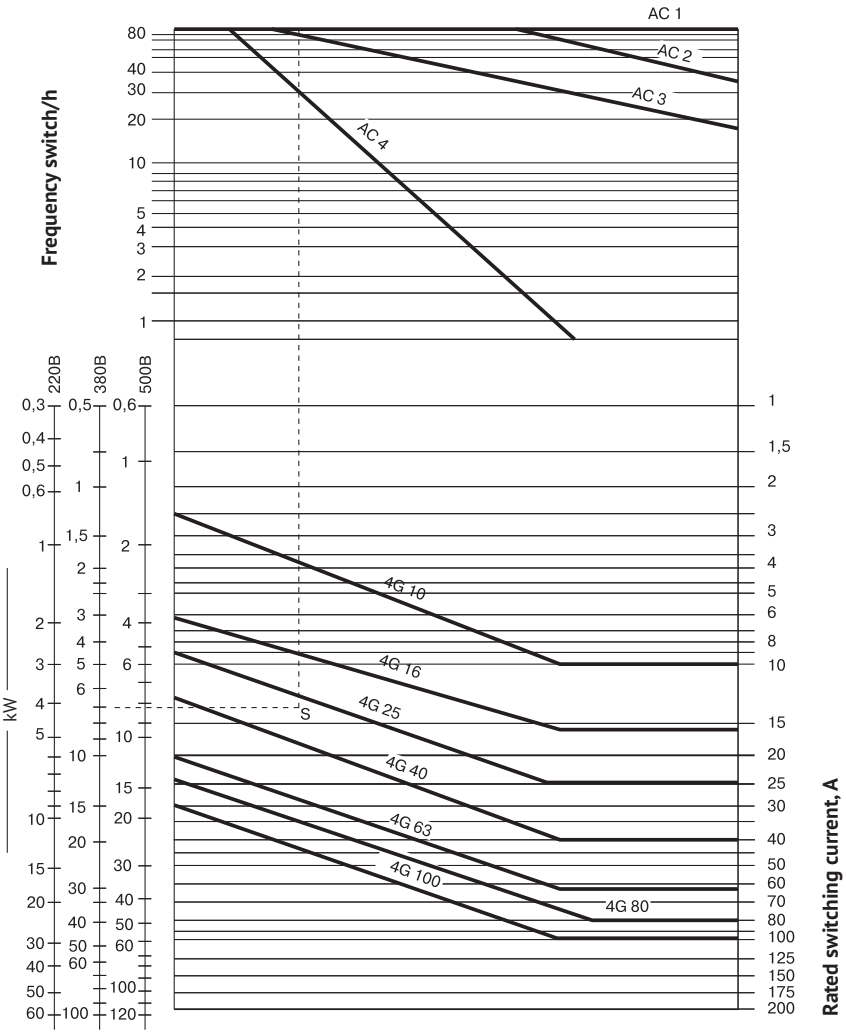

Overall dimensions (mm)

Standard front panel

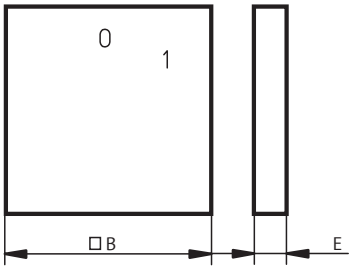

Group	B	E	Front panel		
			A0	A1	A2
A0, A1	48	7,5	+	+	+
A2	88	9,5	-	-	+

Handle

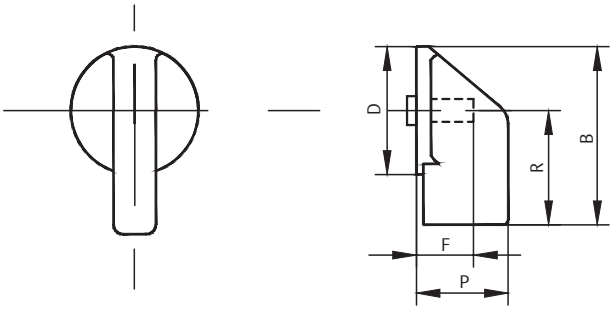

Group	D	P	R	B	F	Handle		
	Ø					A0	A1	A2
A0, A1	25	20	16,5	36	17	+	+	+
A2	35	29	28,5	53	25	-	-	+

Group	A0	A1		A2			
Switch type	4G 10	4G 16	4G 25	4G 40	4G 63	4G 80	4G 63/100
Rated operating current (Ie), A	10	16	25	40	63	80	100

Switches mounted behind the panel

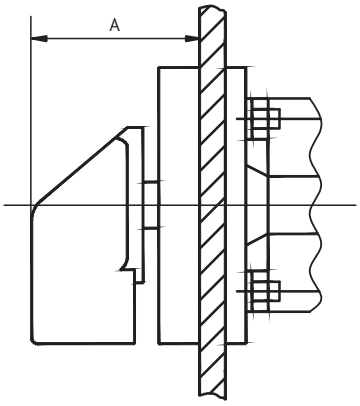

Mounting location

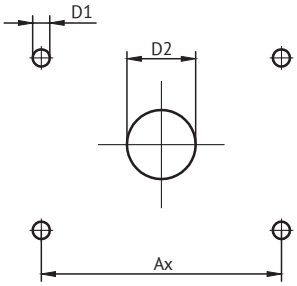

Group	D1	D2	Front panel Ax		
	Ø	Ø	A0	A1	A2
A0, A1	4	8	36	36	36
A2	5	10	-	-	72

Group	A
A0, A1	30
A2	39

Standard design options
Built-in switch

U

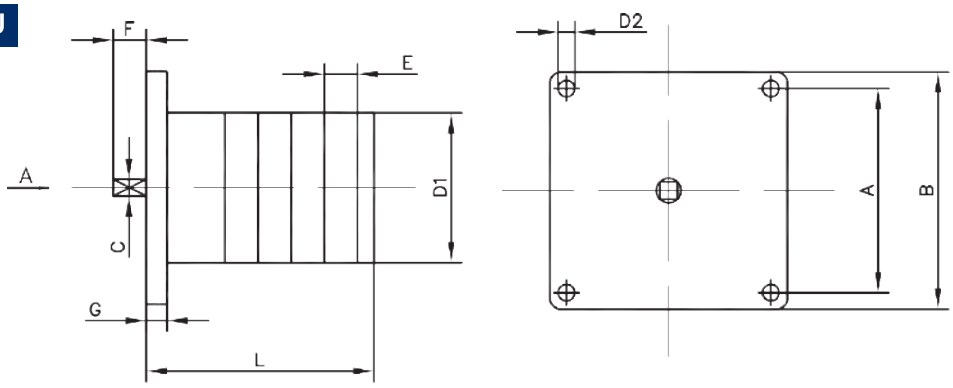

Group	Switch type	D1	D2	A	B	C	E	F	G	L (depending on the number of connecting elements)											
			Ø							1	2	3	4	5	6	7	8	9	10	11	12
A0	4G10	44	3,5	36	48	5	13,5	23	4	42	55,6	69	82,6	96	109	123	136	150	163	177	190
A1	4G16 4G25	48	3,5	36	48	5	16	26	4	48	64	80	96	112	128	144	160	176	192	208	224
A2	4G40 4G63 4G80	68	4,5	60	76	6	17	37,5	5	53	70	87	104	121	138	155	172	189	206	-	-
	4G63/100	6	4,5	60	76x112	6	17	37,5	5	70	104	138	172	206	-	-	-	-	-	-	-

Switch for back wall mounting

OU

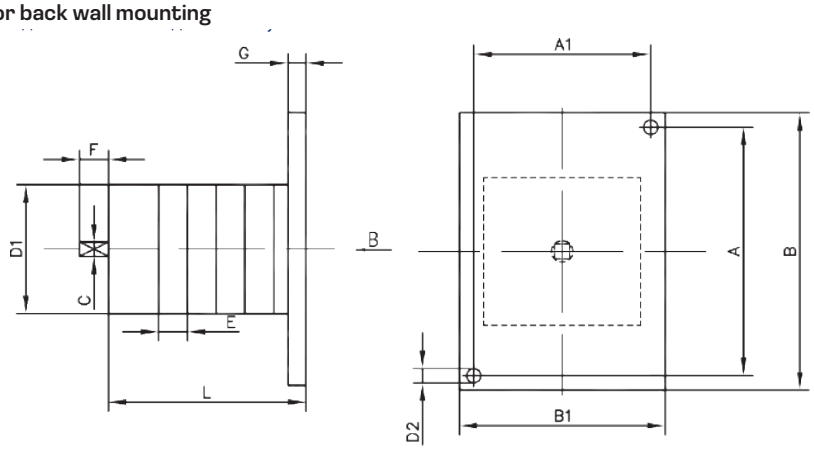

Group	Switch type	D1	D2	A	A1	B	B1	C	E	F	G	L (depending on the number of connecting elements)											
			Ø									1	2	3	4	5	6	7	8	9	10	11	12
A0	4C10	45	3,5	52	35	60	44	5	13,5	23	4	50,6	64	76,5	90	104	117	131	144	158	171	186	198
A1	4C16	48	4,5	56	39	64	48	5	16	26	4	55	71	87	103	119	135	151	167	183	199	215	231
	4C25	48	4,5	56	39	64	48	5	16	26	4	55	71	87	103	119	135	151	167	183	199	215	231
A2	4C40	68	4,5	60	60	76	76	6	17	37,5	5	53	70	87	104	121	138	155	172	189	206	-	-
	4C63 4C80	68	4,5	60	60	76	76	6	17	37,5	5	53	70	87	104	121	138	155	172	189	206	-	-
	4C63/100	68	4,5	60	60	76	76	6	17	37,5	5	70	104	138	172	206	-	-	-	-	-	-	-

Plastic enclosure switch

PK

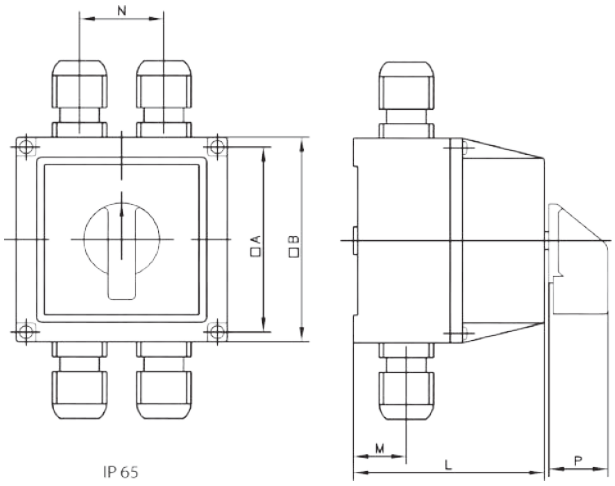

IP 65

Distance between mounting holes

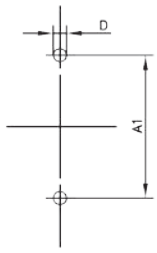

Design option includes:
self-tapping screw – 2 pcs;
dowel — 2 pcs.

Group	Switch type	D1	A	A1	B	M	N	R	L (depending on the number of connecting elements)			
		Ø							1	2	3	4
A0	4C10	4,5	80	62	88	22	33	24	74	74	95	95
A1	4C16	4,5	91	72	100	26	39	24	86	86	114	114
	4C25	4,5	91	72	100	26	39	24	86	86	114	114

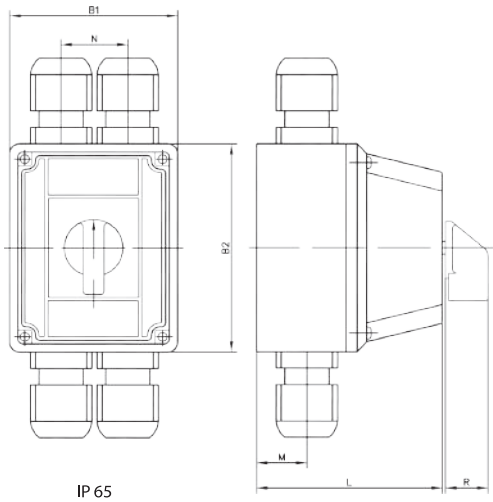

IP 65

Distance between mounting holes

Design option includes:
self-tapping screw – 2 pcs;
dowel — 2 pcs.

Group	Switch type	D	A1	B1	B2	M	N	R	L (depending on the number of connecting elements)			
		Ø							1	2	3	4
A2	4C40	5,5	130	126	162	27	50	29	102	102	136	136
	4C63 4C80	5,5	130	126	162	27	50	29	102	102	136	136
	4C63/100	5,5	130	126	162	27	50	29	102	102	136	136

Switching program scheme guide

Switching program		Diagram number	Page
Switches with 0 position (0-1)			
1-pole		90	300
2-pole		91	
3-pole		10	
4-pole		92	
5-pole		99	
6-pole		100	
Fast switches (0-1)			
30° early make contact 1-pole		270	300
30° early make contact 2-pole		271	
30° early make contact 3-pole		63	
3 x 30° early make contacts 1 x 60° early make contact 4-pole		272	
3 x 30° early make contacts 2 x 60° early make contacts 5-pole		273	
30° early make contact 6-pole		274	
Switches with 0 position (0-1-2)			
1-pole		51	301
2-pole		52	
3-pole		53	
4-pole		75	
5-pole		76	
6-pole		77	
7-pole		78	
8-pole		79	
9-pole		80	
10-pole		81	
Current transformer switches (1-2)			
		57	301
Switches without 0 position (1-2)			
1-pole		54	302
2-pole		55	
3-pole		56	
4-pole		69	
5-pole		70	
6-pole		71	
7-pole		72	
8-pole		73	
9-pole		74	
10-pole		62	
Multi-position switches with 0 position (0-1-2...)			
1-pole	2 positions	107	302-303
	3 positions	108	
	4 positions	109	
	5 positions	110	
	6 positions	111	
	7 positions	112	
	8 positions	113	
	9 positions	114	
	10 positions	115	
	11 positions	116	

Switching program		Diagram number	Page
2-pole	2 positions	123	303-304
	3 positions	124	
	4 positions	125	
	5 positions	126	
	6 positions	127	
	7 positions	128	
	8 positions	129	
	9 positions	130	
	10 positions	131	
	11 positions	132	
3-pole	2 positions	135	304-305
	3 positions	136	
	4 positions	137	
	5 positions	138	
	6 positions	139	
	7 positions	140	
4-pole	2 positions	145	
	3 positions	146	
	4 positions	147	
	5 positions	148	
5-pole	2 positions	151	305-306
	3 positions	152	
	4 positions	153	
6-pole	2 positions	156	
	3 positions	157	
	4 positions	158	
7-pole	2 positions	160	
	3 positions	161	
8-pole	2 positions	163	
	3 positions	164	
Multi-position switches without 0 position			
1-pole	3 positions	82	307
	4 positions	83	
	5 positions	84	
	6 positions	85	
	7 positions	101	
	8 positions	102	
	9 positions	103	
	10 positions	104	
	11 positions	105	
	12 positions	106	
2-pole	3 positions	86	308
	4 positions	87	
	5 positions	88	
	6 positions	89	
	7 positions	117	
	8 positions	118	
	9 positions	119	
	10 positions	120	
	11 positions	121	
	12 positions	122	
3-pole	3 positions	93	309
	4 positions	94	
	5 positions	95	
	6 positions	96	
	7 positions	133	
	8 positions	134	

Switching program		Diagram number	Page
4-pole	3 positions	141	309
	4 positions	142	
	5 positions	143	
	6 positions	144	
5-pole	3 positions	149	309-310
	4 positions	150	
6-pole	3 positions	154	
	4 positions	155	
7-pole	3 positions	159	
8-pole	3 positions	162	
Group switches with 0 position			
1-pole	2-group	251	311
	3-group	254	
2-pole	2-group	252	
	3-group	255	
3-pole	2-group	253	
	3-group	256	
Ganged group switches			
1-pole 2-group		257	311
2-pole 2-group		258	
3-pole 2-group		259	
Parallel ganged group switches 2-pole 2-group		260	
Voltmeter and ammeter switches			
Ammeter switches			311-312
2-pole L1-L2-L3		58	
2-pole 0-1-2-3		97	
1-pole 0-1-2-3		98	
Voltmeter switches without 0 position			312
3 line voltages + 1 phase voltage		60	
Voltmeter switches without 0 position			312
3 phase voltages		68	
3 line voltages		67	
3 line voltages + 3 phase voltages		66	
Toggle switch (with automatic reset)			
Switches with 0 position (1-0-2)			313
Reset to 0 on both sides			
1-pole		201	
2-pole		202	
3-pole		203	
Toggle switch with left and right switching		210	
Toggle switch (with automatic reset) Switches without 0 position (1-2)			
1 NC + 1 NO		204	313
2 NC + 2 NO		205	
3 NC + 3 NO		206	
To contactor control, 1-pole		207	
1 ON + 1 OFF for right and left switching		208	
2 ON + 2 OFF for right and left switching		209	

Switching program	Diagram number	Page
Motor switches		
Star/delta switches		314
Basic design	12	
Y/Δ switch with reset from Y to 0	28	
with countercurrent braking, with reset from Y to 0	29	
as a voltage switch	30	
contactor-controlled	31	
with two rotation directions	21	
Dahlander system switches		
Two-speed Δ-0-YY	13	315
Two-speed 0-Δ-YY	19	
Two-speed bidirectional YY-Δ-0-Δ-YY	7620	
Two-speed contactor-controlled	32	
Double-winding motor switches		
1-0-2	53	315
0-1-2	22	
two-directional	23	
contactor-controlled	33	
Three-speed motor switches		
2 windings 0-Δ-YY-Y ((with 3- poles in Dahlander system)	34	316
2 windings 0-Δ-YY-Y (with 1 and 2 speeds in Dahlander system)	35	
2 windings 0-Δ-YY-Y (with 2 and 3 speeds in Dahlander system)	36	
Motor reversing switches		
2-pole	24	316
2-pole, reset to 0 position	25	
3-pole	11	
3-pole, reset to 0 position	26	
3-pole contactor-controlled	27	
Single-phase motor starting switches	15	
Additional switching program schemes		317

WARNING! This catalog is designed to facilitate the selection of switches. It includes the most demanded schemes and is continuously updated. If the necessary circuit switching scheme is not shown above, contact us to assist in selecting the appropriate switch.

Switching program schemes

Switches with 0 position 0-1

Switching program	Diagram number
1-pole	90
2-pole	91
3-pole	10
4-pole	92
5-pole	99
6-pole	100

1-pole
Scheme 90

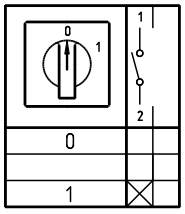

2-pole
Scheme 91

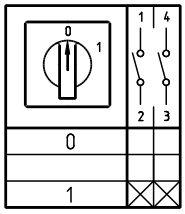

3-pole
Scheme 10

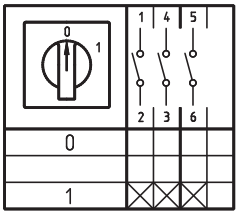

4-pole
Scheme 92

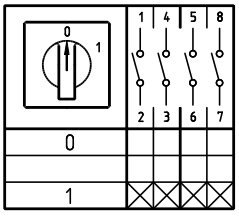

5-pole
Scheme 99

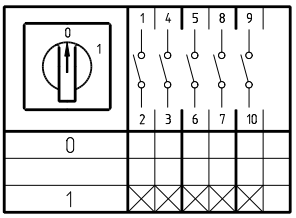

6-pole
Scheme 100

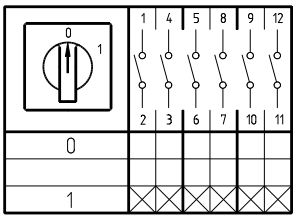

Fast switches (0-1)

Switching program	Diagram number
30° early make contacts 1-pole	270
30° early make contacts 2-pole	271
30° early make contacts 3-pole	63
3 x 30° early make contacts 1 x 60° early make contact 4-pole	272
3 x 30° early make contacts 2 x 60° early make contacts 5-pole	273
30° early make contacts 6-pole	274

30° early make contacts
1-pole
Scheme 270

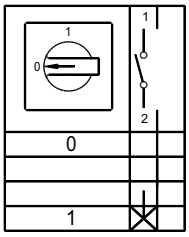

30° early make contacts
2-pole
Scheme 271

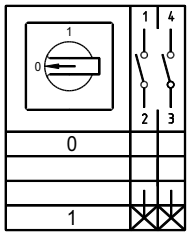

30° early make contacts
3-pole
Scheme 63

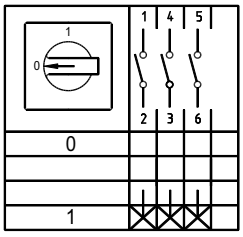

3 x 30° early make contacts
1 x 60° early make contact
4-pole
Scheme 272

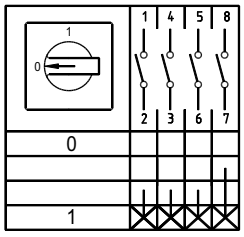

3 x 30° early make contacts
2 x 60° early make contacts
5-pole
Scheme 273

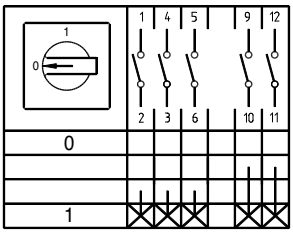

30° early make contacts
4-pole
Scheme 274

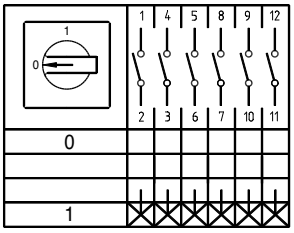

Switches with 0 position (0-1-2)

Switching program	Diagram number
1-pole	51
2-pole	52
3-pole	53
4-pole	75
5-pole	76
6-pole	77
7-pole	78
8-pole	79
9-pole	80
10-pole	81

1-pole
Scheme 51

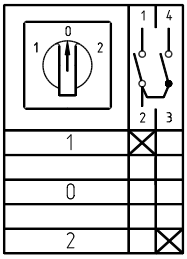

2-pole
Scheme 52

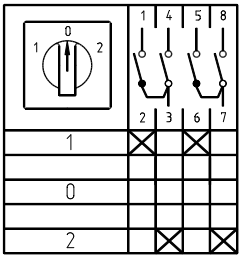

3-pole
Scheme 53

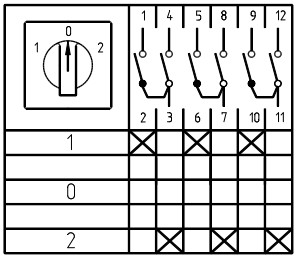

4-pole
Scheme 75

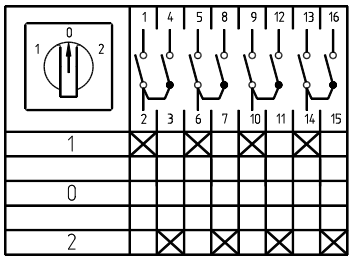

5-pole
Scheme 76

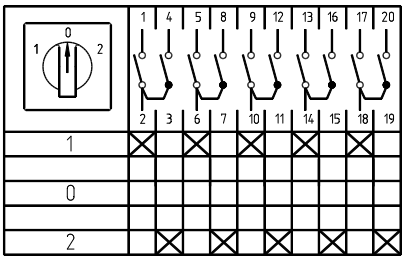

6-pole
Scheme 77

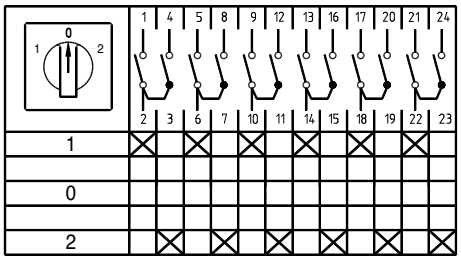

7-pole
Scheme 78

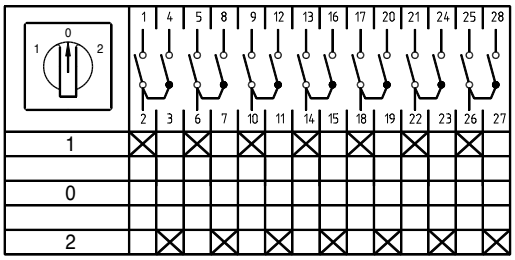

8-pole
Scheme 79

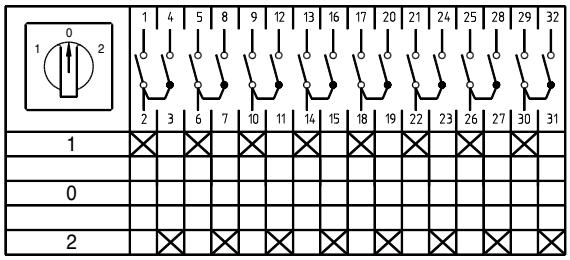

9-pole
Scheme 80

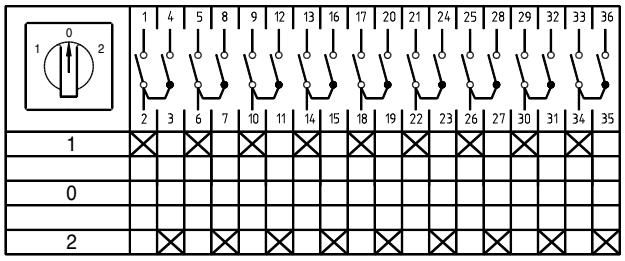

10-pole
Scheme 81

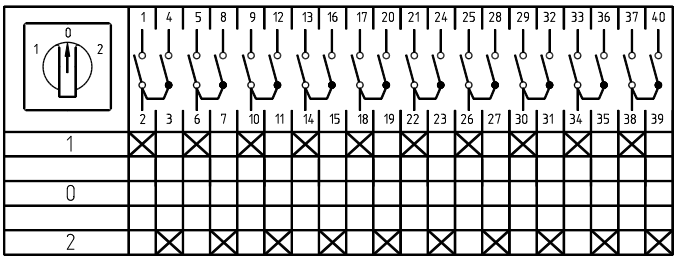

Current transformer switches (1-2)

Scheme 57

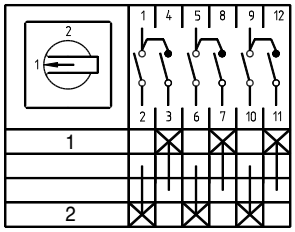

Switches without 0 position (1-2)

Switching program	Diagram number
1-pole	54
2-pole	55
3-pole	56
4-pole	69
5-pole	70
6-pole	71
7-pole	72
8-pole	73
9-pole	74
10-pole	62

1-pole
Scheme 54

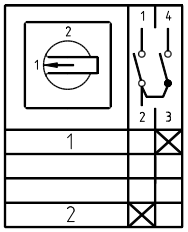

2-pole
Scheme 55

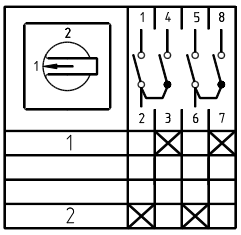

3-pole
Scheme 56

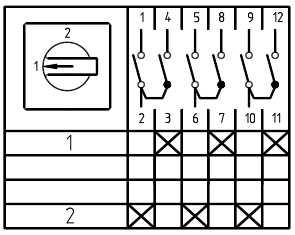

4-pole
Scheme 69

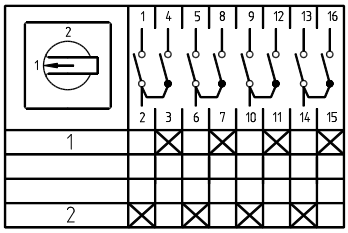

5-pole
Scheme 70

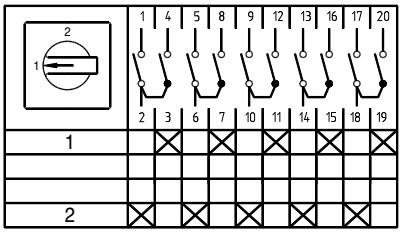

6-pole
Scheme 71

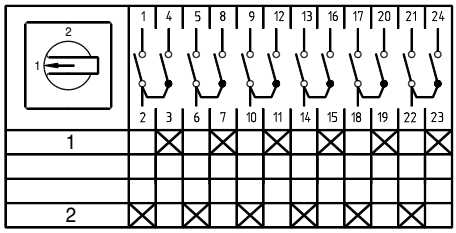

7-pole
Scheme 72

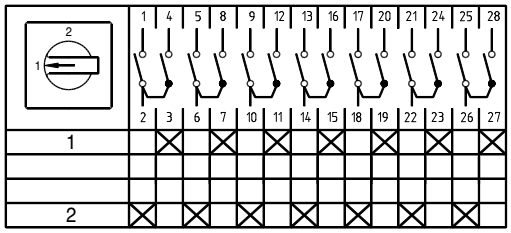

8-pole
Scheme 73

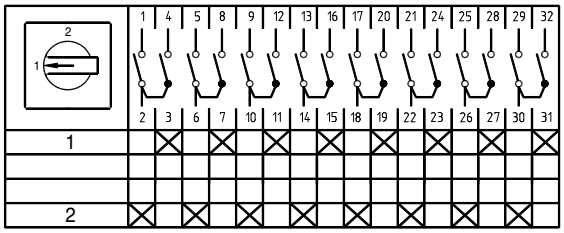

9-pole
Scheme 74

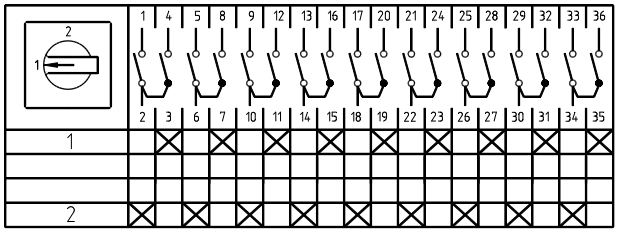

10-pole
Scheme 62

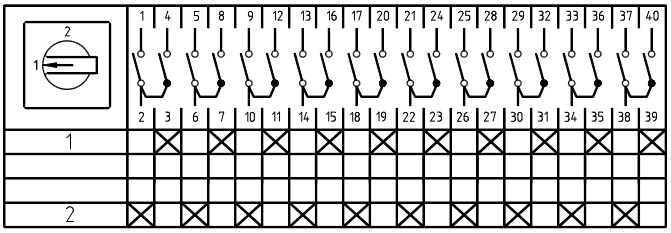

Multi-position switches with 0 position (0-1-2...)

1-pole
2 positions
Scheme 107

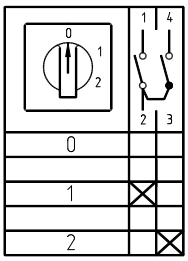

1-pole
3 positions
Scheme 108

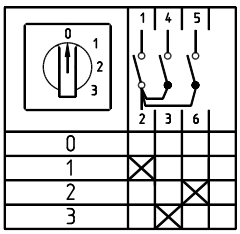

1-pole
4 positions
Scheme 109

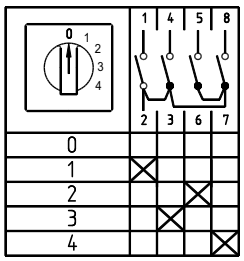

1-pole
5 positions
Scheme 110

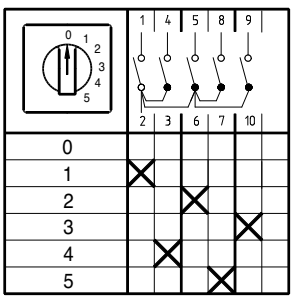

Multi-position switches with 0 position (0-1-2...)

Switching program		Diagram number
1-pole	2 positions	107
	3 positions	108
	4 positions	109
	5 positions	110
	6 positions	111
	7 positions	112
	8 positions	113
	9 positions	114
	10 positions	115
	11 positions	116
2-pole	2 positions	123
	3 positions	124
	4 positions	125
	5 positions	126
	6 positions	127
	7 positions	128
	8 positions	129
	9 positions	130
	10 positions	131
	11 positions	132
3-pole	2 positions	135
	3 positions	136
	4 positions	137
	5 positions	138
	6 positions	139
	7 positions	140
4-pole	2 positions	145
	3 positions	146
	4 positions	147
	5 positions	148
5-pole	2 positions	151
	3 positions	152
	4 positions	153
6-pole	2 positions	156
	3 positions	157
	4 positions	158
7-pole	2 positions	160
	3 positions	161
8-pole	2 positions	163
	3 positions	164

1-pole
6 positions
Scheme 111

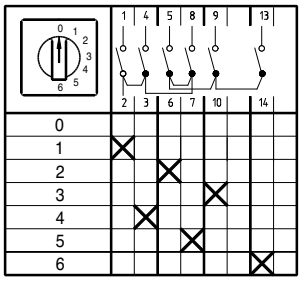

1-pole
7 positions
Scheme 112

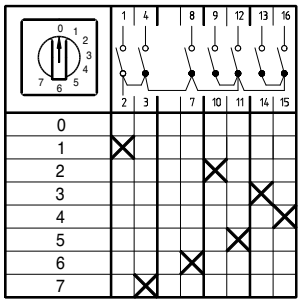

1-pole
8 positions
Scheme 113

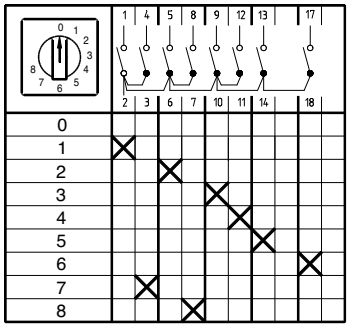

1-pole
9 positions
Scheme 114

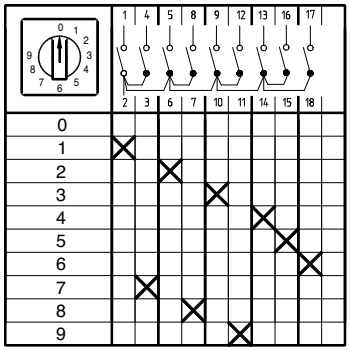

1-pole
10 positions
Scheme 115

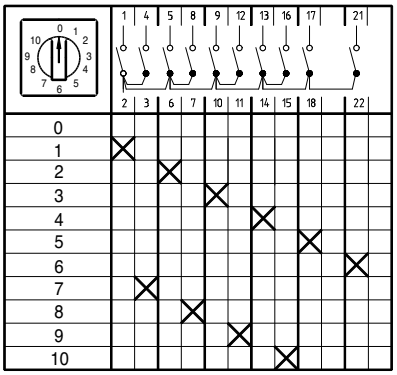

1-pole
11 positions
Scheme 116

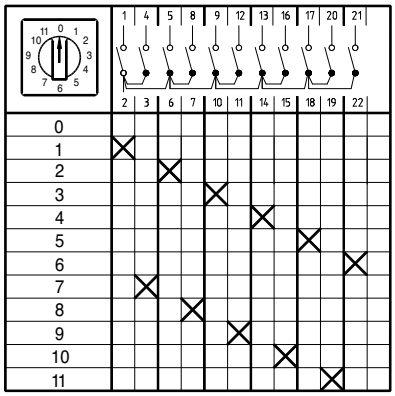

2-pole
2 positions
Scheme 123

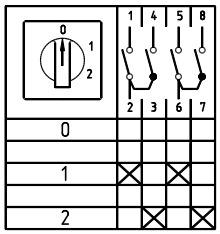

2-pole
3 positions
Scheme 124

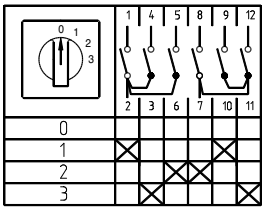

2-pole
4 positions
Scheme 125

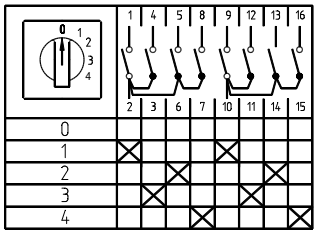

2-pole
5 positions
Scheme 126

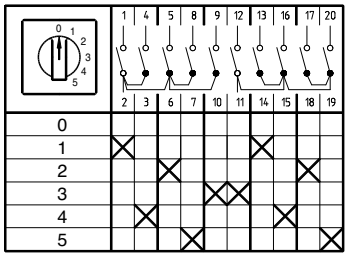

Multi-position switches with 0 position (0-1-2...)

2-pole
6 positions
Scheme 127

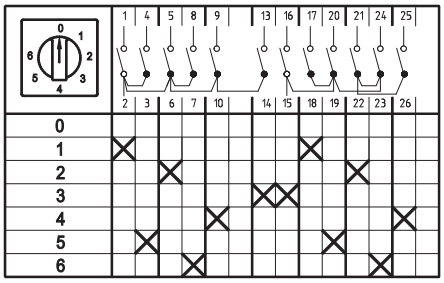

2-pole
7 positions
Scheme 128

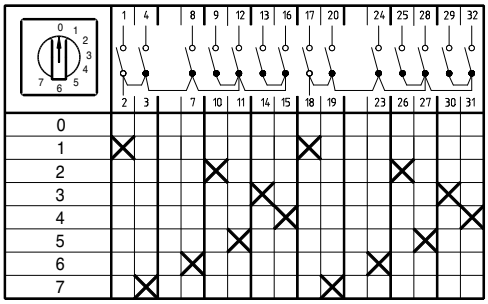

2-pole
8 positions
Scheme 129

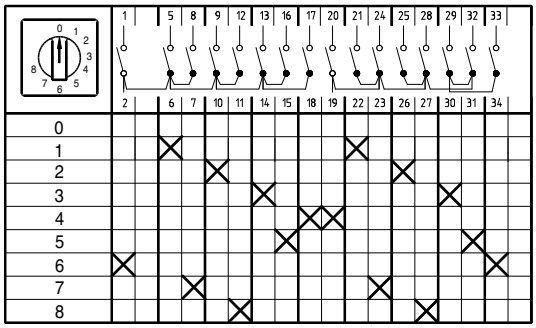

2-pole
9 positions
Scheme 130

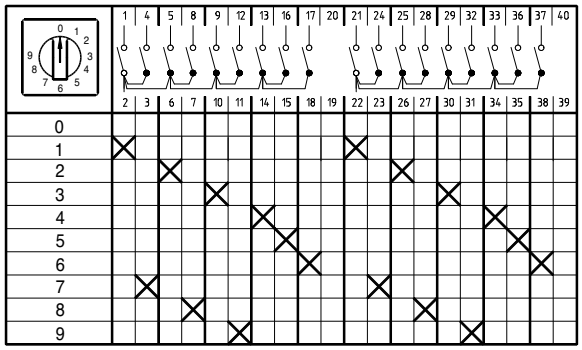

2-pole
10 positions
Scheme 131

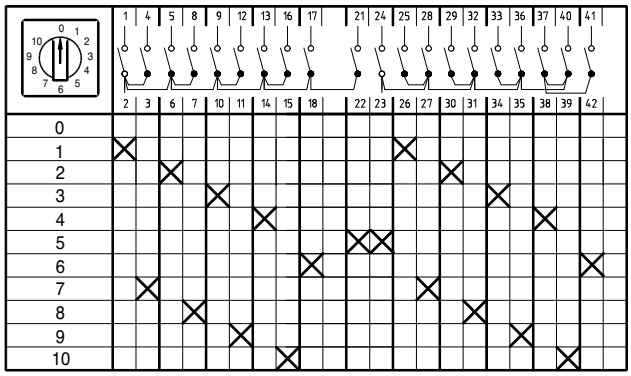

2-pole
11 positions
Scheme 132

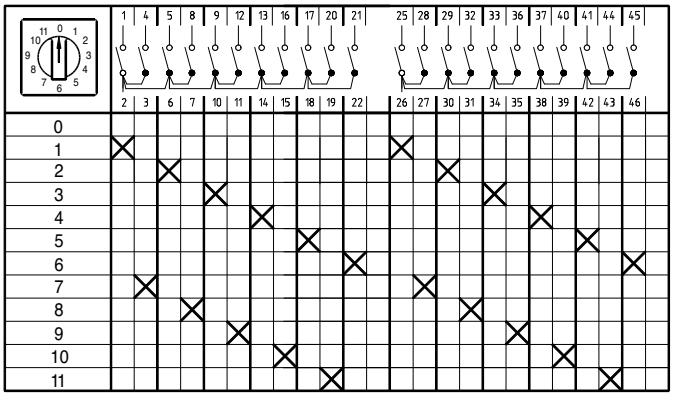

3-pole
2 positions
Scheme 135

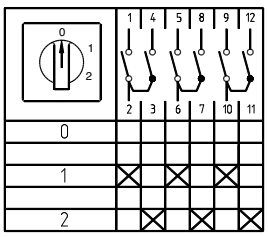

3-pole
3 positions
Scheme 136

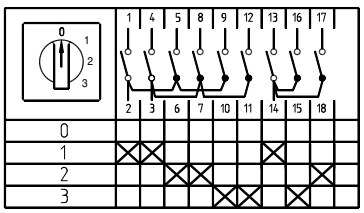

3-pole
4 positions
Scheme 137

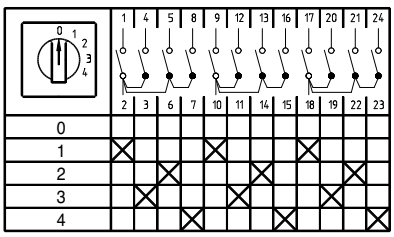

Multi-position switches with 0 position (0-1-2...)

3-pole
5 positions
Scheme 138

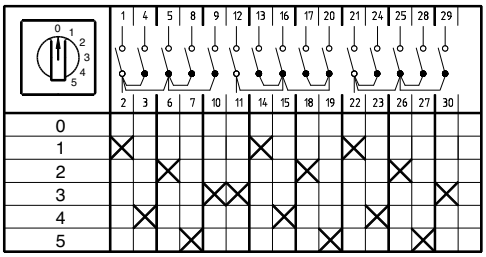

3-pole
6 positions
Scheme 139

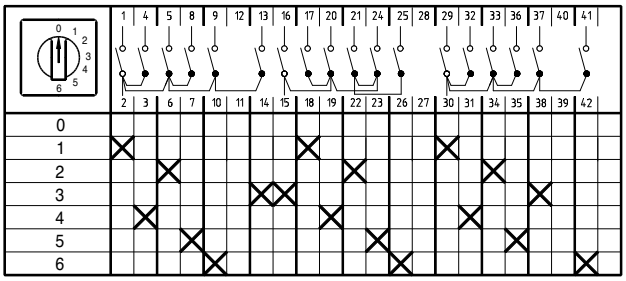

3-pole
7 positions
Scheme 140

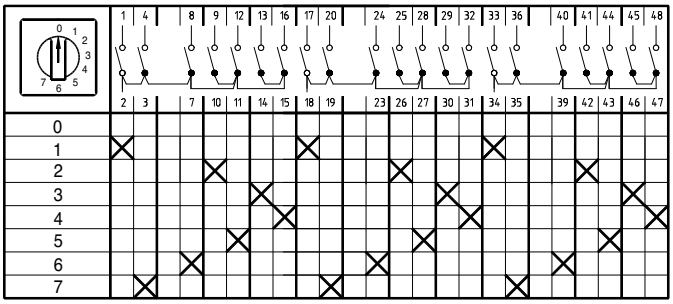

4-pole
2 positions
Scheme 145

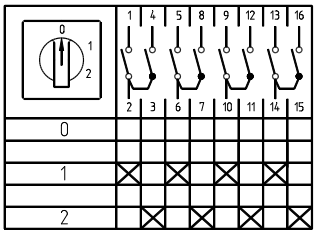

4-pole
3 positions
Scheme 146

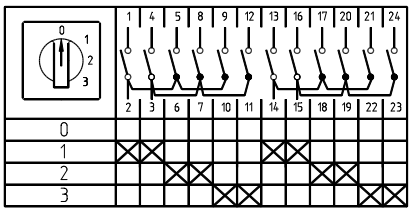

4-pole
4 positions
Scheme 147

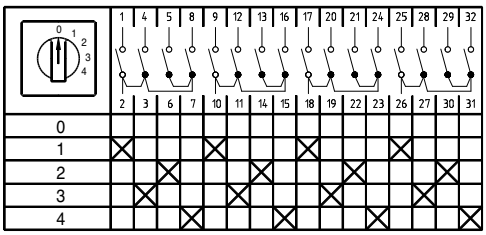

4-pole
5 positions
Scheme 148

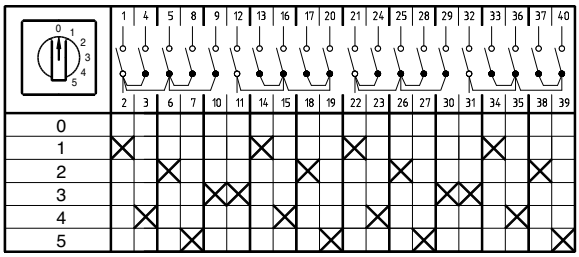

5-pole
2 positions
Scheme 151

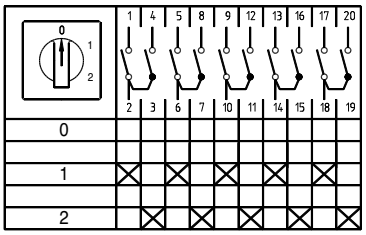

Multi-position switches with 0 position (0-1-2...)

5-pole
3 positions
Scheme 152

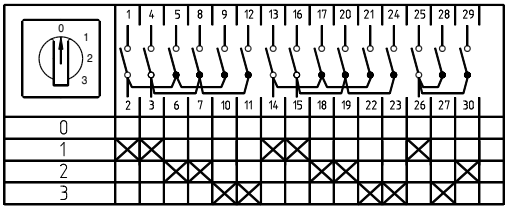

5-pole
4 positions
Scheme 153

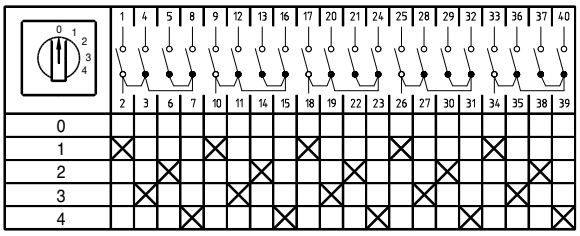

6-pole
2 positions
Scheme 156

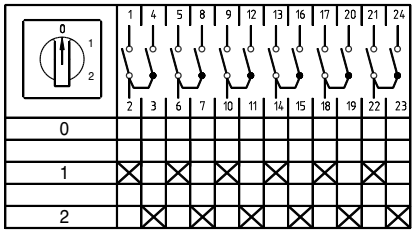

6-pole
3 positions
Scheme 157

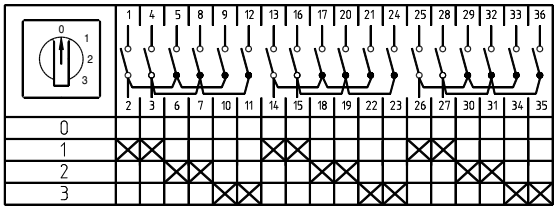

6-pole
4 positions
Scheme 158

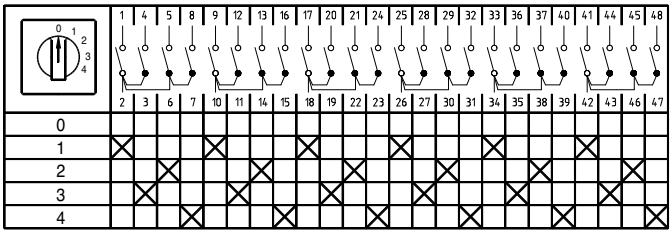

7-pole
2 positions
Scheme 160

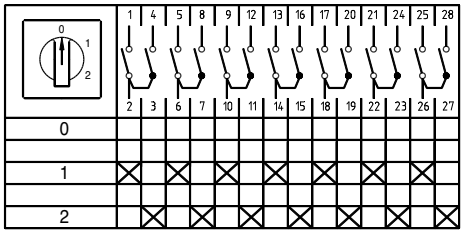

7-pole
3 positions
Scheme 161

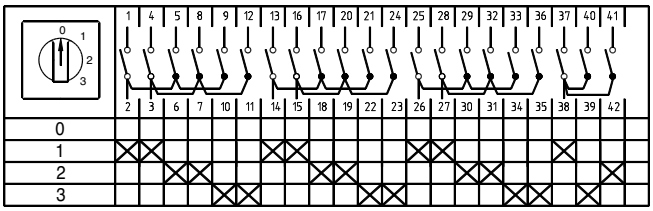

8-pole
2 positions
Scheme 163

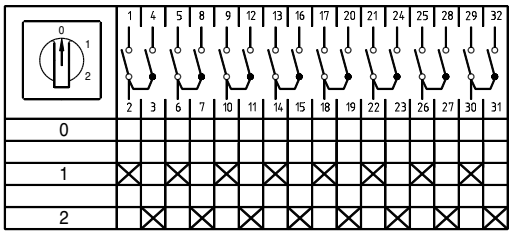

8-pole
3 positions
Scheme 164

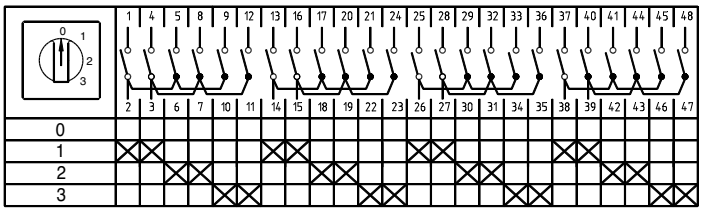

Multi-position switches without 0 position

Switching program		Diagram number
1-pole	3 positions	82
	4 positions	83
	5 positions	84
	6 positions	85
	7 positions	101
	8 positions	102
	9 positions	103
	10 positions	104
	11 positions	105
	12 positions	106
2-pole	3 positions	86
	4 positions	87
	5 positions	88
	6 positions	89
	7 positions	117
	8 positions	118
	9 positions	119
	10 positions	120
	11 positions	121
	12 positions	122
3-pole	3 positions	93
	4 positions	94
	5 positions	95
	6 positions	96
	7 positions	133
	8 positions	134
4-pole	3 positions	141
	4 positions	142
	5 positions	143
	6 positions	144
5-pole	3 positions	149
	4 positions	150
6-pole	3 positions	154
	4 positions	155
7-pole	3 positions	159
8-pole	3 positions	162

1-pole, 3 positions
Scheme 82

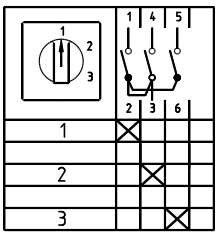

1-pole, 4 positions
Scheme 83

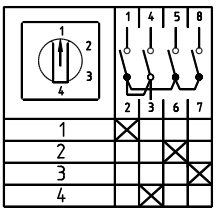

1-pole, 5 positions
Scheme 84

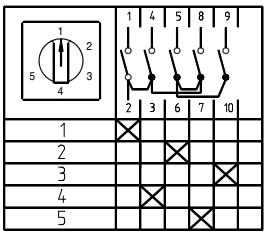

1-pole, 6 positions
Scheme 85

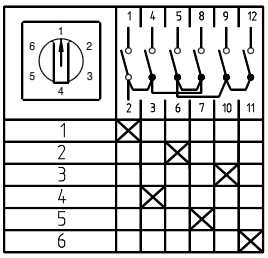

1-pole, 7 positions
Scheme 101

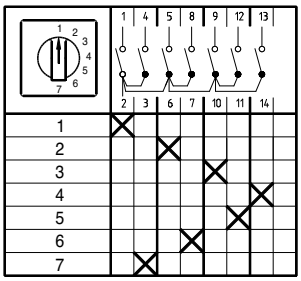

1-pole, 8 positions
Scheme 102

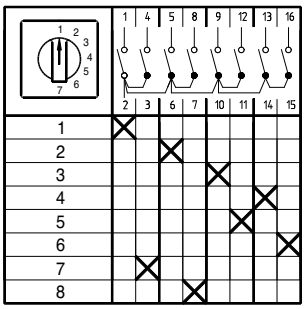

1-pole, 9 positions
Scheme 103

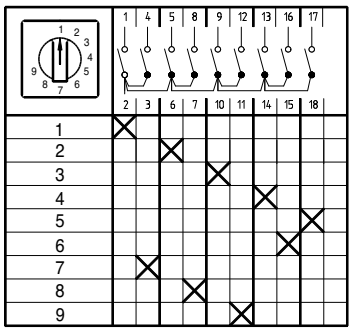

1-pole, 10 positions
Scheme 104

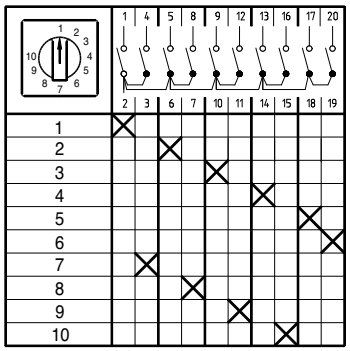

1-pole, 11 positions
Scheme 105

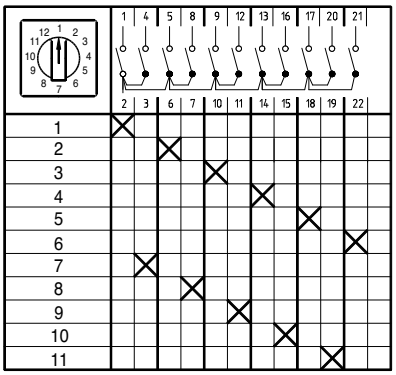

1-pole, 12 positions
Scheme 106

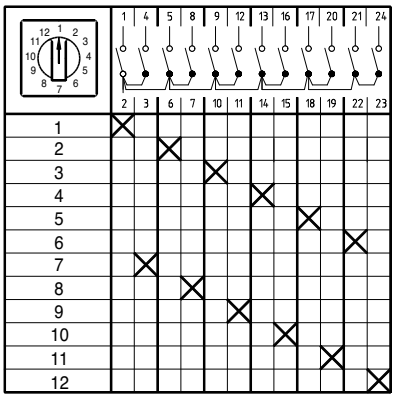

Multi-position switches without 0 position

2-pole, 3 positions
Scheme 86

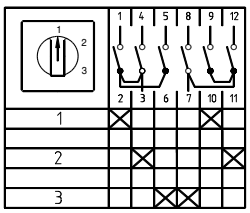

2-pole, 4 positions
Scheme 87

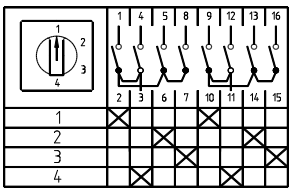

2-pole, 5 positions
Scheme 88

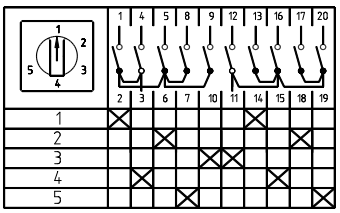

2-pole, 6 positions
Scheme 89

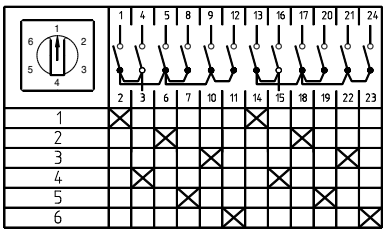

2-pole, 7 positions
Scheme 117

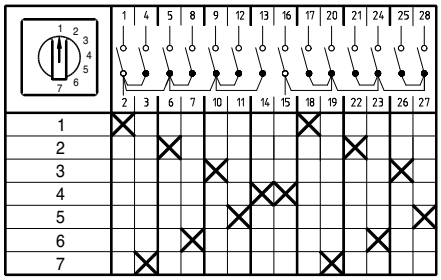

2-pole, 8 positions
Scheme 118

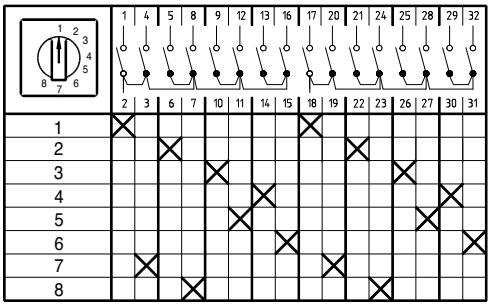

2-pole, 9 positions
Scheme 119

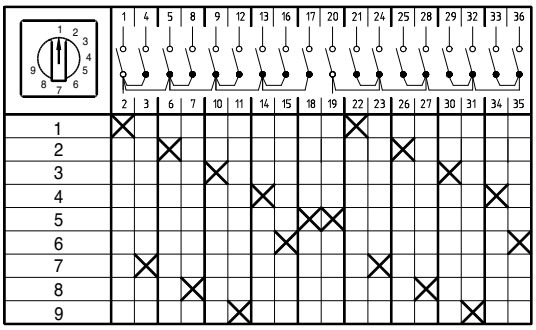

2-pole, 10 positions
Scheme 120

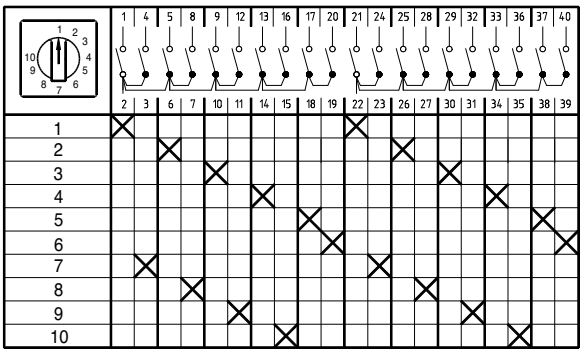

2-pole, 11 positions
Scheme 121

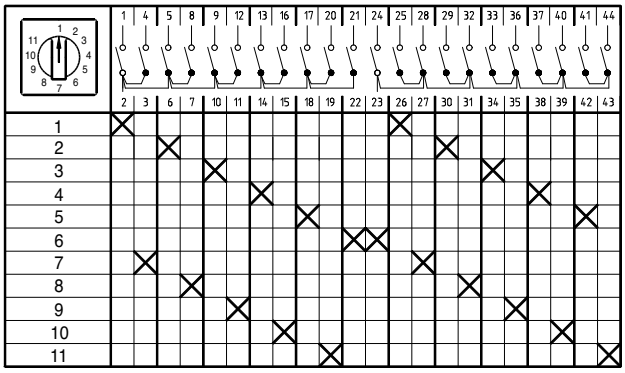

2-pole, 12 positions
Scheme 122

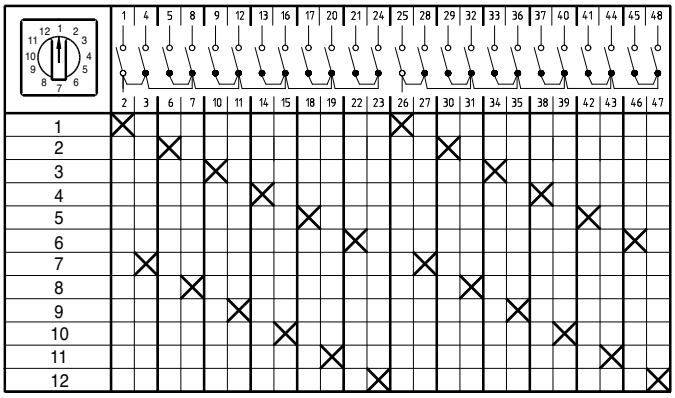

Multi-position switches without 0 position

3-pole, 3 positions
Scheme 93

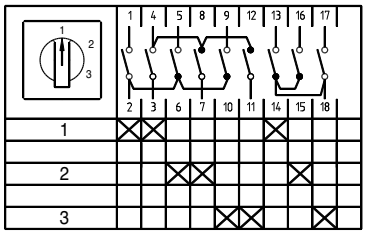

3-pole, 4 positions
Scheme 94

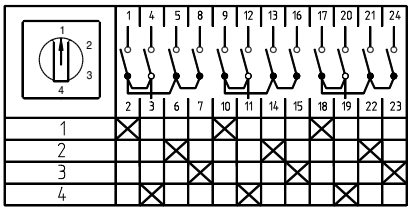

3-pole, 5 positions
Scheme 95

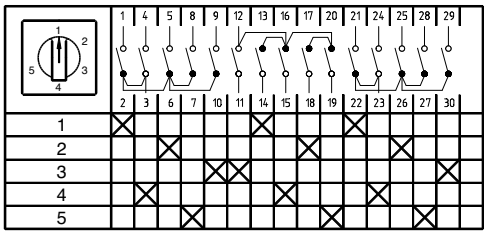

3-pole, 6 positions
Scheme 96

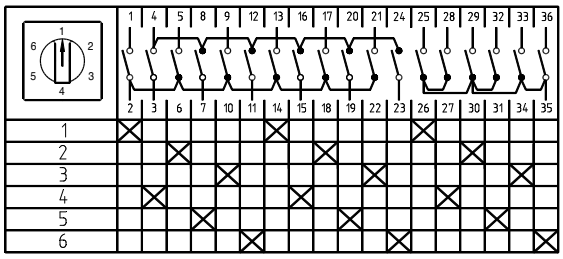

3-pole, 7 positions
Scheme 133

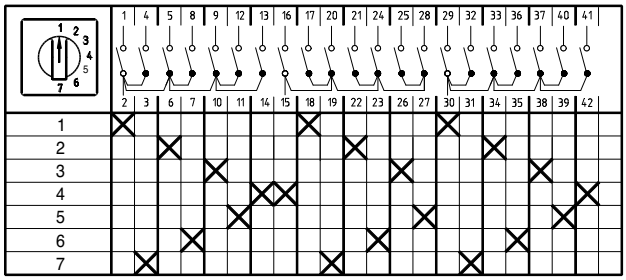

3-pole, 8 positions
Scheme 134

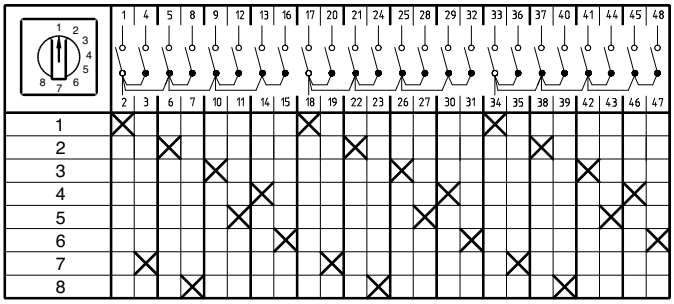

4-pole, 3 positions
Scheme 141

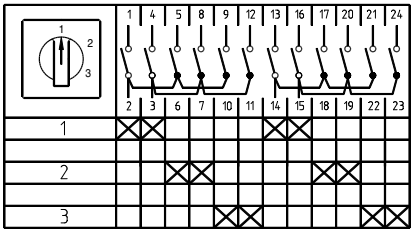

4-pole, 4 positions
Scheme 142

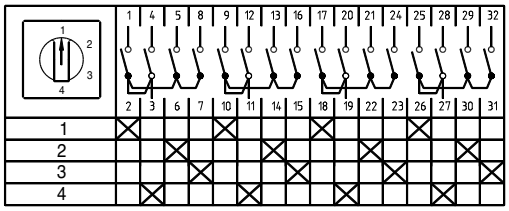

4-pole, 5 positions
Scheme 143

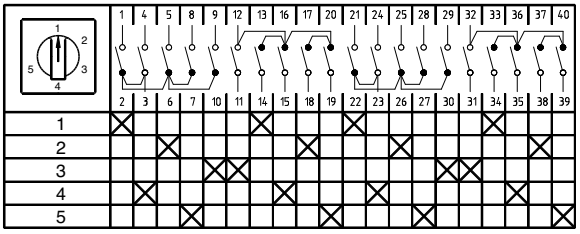

4-pole, 6 positions
Scheme 144

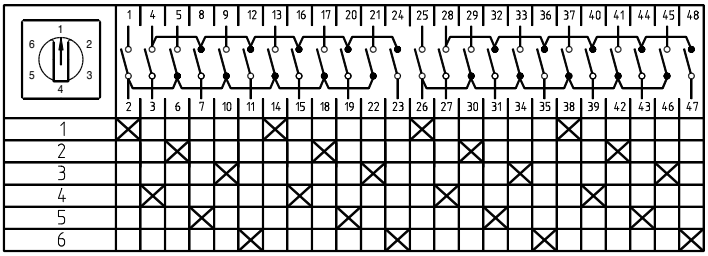

5-pole, 3 positions
Scheme 149

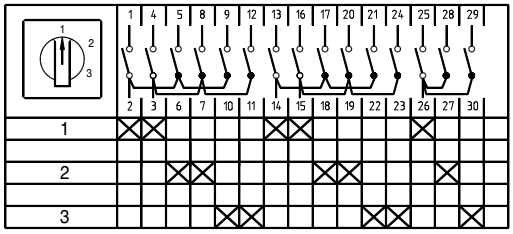

Multi-position switches without 0 position

5-pole, 4 positions
Scheme 150

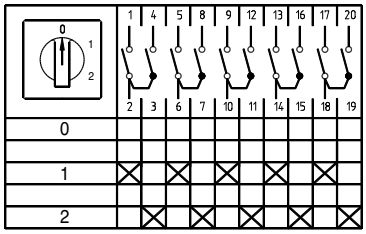

6-pole, 3 positions
Scheme 154

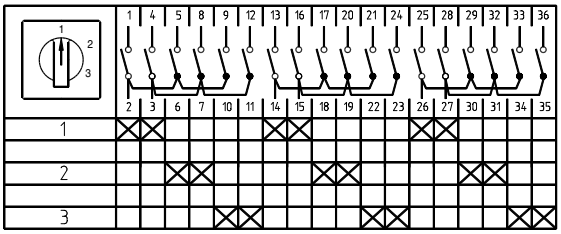

6-pole, 4 positions
Scheme 155

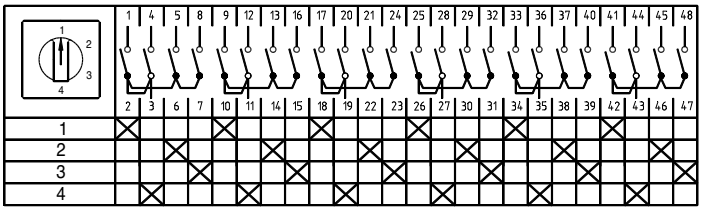

7-pole, 3 positions
Scheme 159

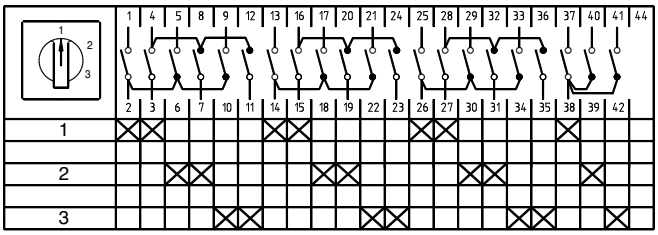

8-pole, 3 positions
Scheme 162

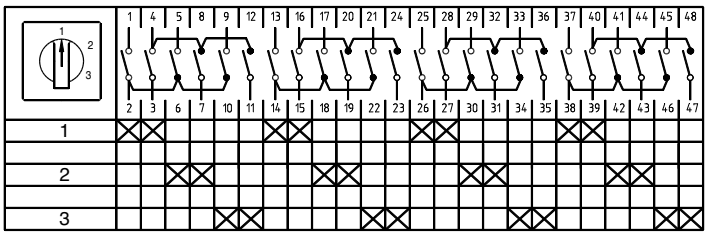

Group switches with 0 position

Switching program		Diagram number
1-pole	2-group	251
	3-group	254
2-pole	2-group	252
	3-group	255
3-pole	2-group	253
	3-group	256

1-pole, 2-group
Scheme 251

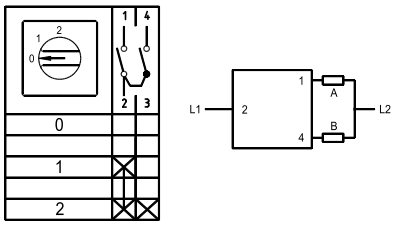

1-pole, 3-group
Scheme 254

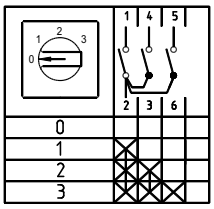

2-pole, 3-group
Scheme 255

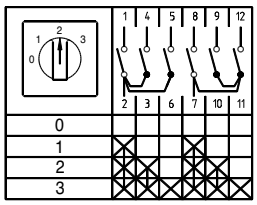

2-pole, 2-group
Scheme 252

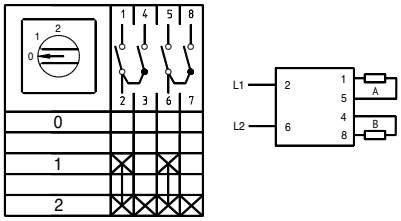

3-pole, 2-group
Scheme 253

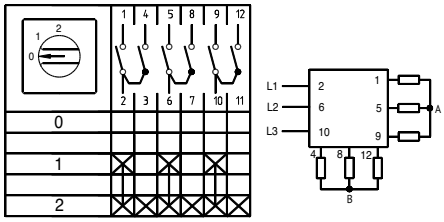

3-pole, 3-group
Scheme 256

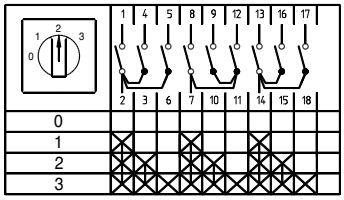

Ganged group switches

Switching program	Diagram number
1-pole 2-group	257
2-pole 2-group	258
3-pole 2-group	259

1-pole, 2-group
Scheme 257

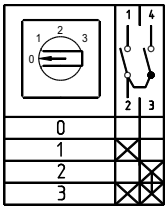

2-pole, 2-group
Scheme 258

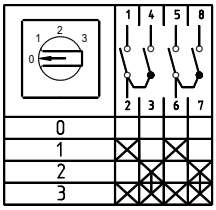

3-pole, 2-group
Scheme 259

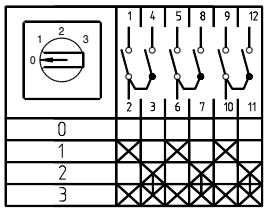

Parallel ganged group switches

Switching program	Diagram number
2-pole 2-group	260

2-pole, 2-group
Scheme 260

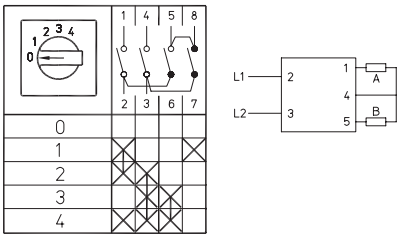

Ammeter switches

Switching program	Diagram number
2-pole L1-L2-L3	58
2-pole 0-1-2-3	97
1-pole 0-1-2-3	98

2-pole L1-L2-L3
Scheme 58

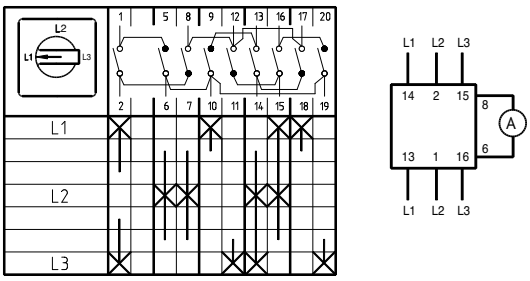

2-pole 0-1-2-3
Scheme 97

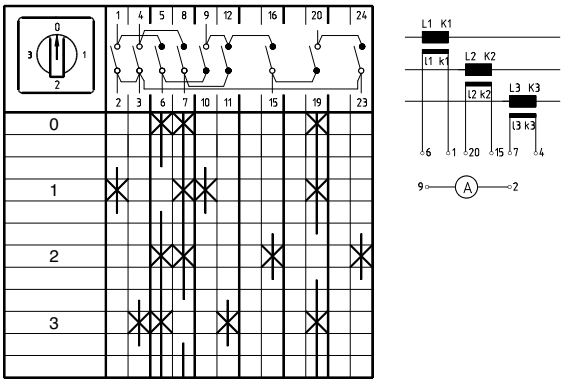

1-pole 0-1-2-3
Scheme 98

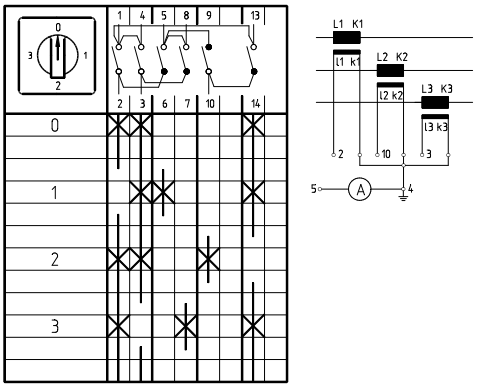

Voltmeter switches without 0 position

Switching program	Diagram number
3 line voltages + 1 phase voltage	60

3 line voltages + 1 phase
Scheme 60

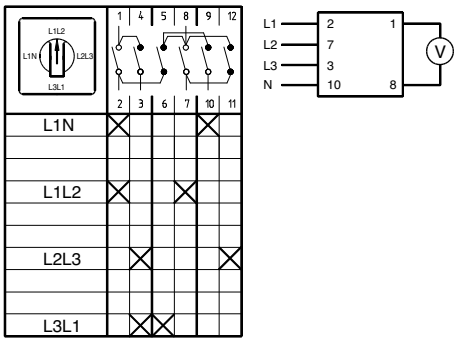

Voltmeter switches without 0 position

Switching program	Diagram number
3 phase voltages	68
3 line voltages	67
3 line voltages + 3 phase	66

3 phase voltages
Scheme 68

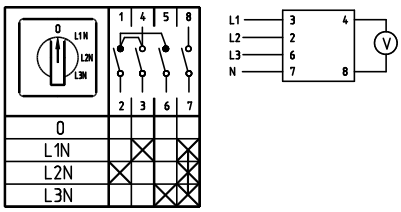

3 line voltages
Scheme 67

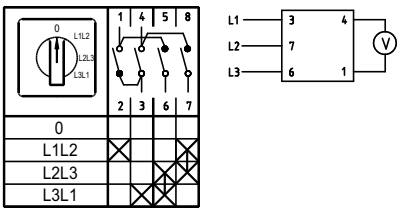

3 line voltages + 3 phase
Scheme 66

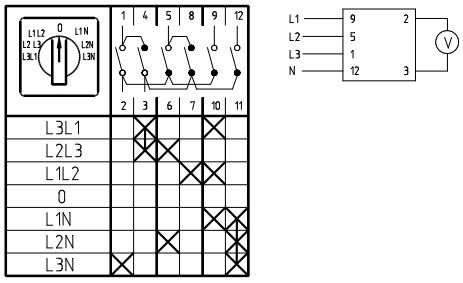

Toggle switch (with automatic reset)

Switches with 0 position (1-0-2)
Reset to 0 on both sides

Switching program	Diagram number
1-pole	201
2-pole	202
3-pole	203
Toggle switch with left and right switching	210

1-pole
Scheme 201

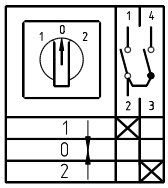

2-pole
Scheme 202

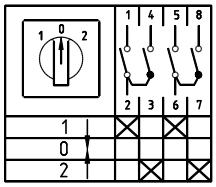

3-pole
Scheme 203

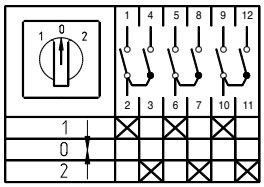

Toggle switch with left and right switching
Scheme 210

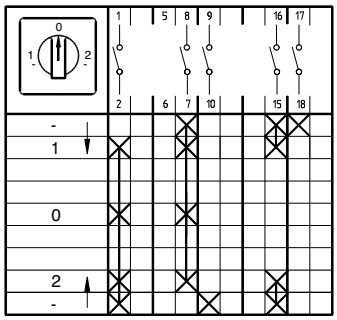

Toggle switch (with automatic reset)

Switching program	Diagram number
Switches without 0 position (1-2)	
1 NC + 1 NO	204
2 NC + 2 NO	205
3 NC + 3 NO	206
To contactor control	
1-pole	207
1 ON + 1 OFF For right and left switching	208
2 ON + 2 OFF for right and left switching	209

Switches without 0 position (1-2)

1 NC + 1 NO
Scheme 204

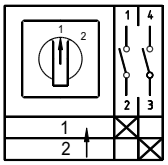

2 NC + 2 NO
Scheme 205

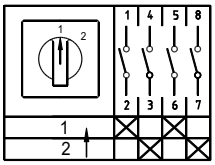

3 NC + 3 NO
Scheme 206

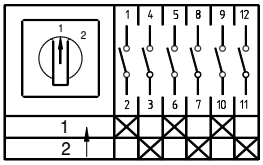

To contactor control

1-pole
Scheme 207

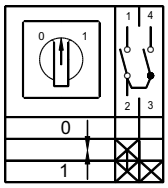

1 ON + 1 OFF For right and left switching
Scheme 208

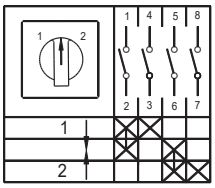

2 ON + 2 OFF for right and left switching
Scheme 209

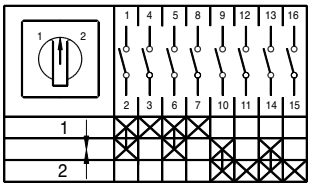

Motor switches

Star/delta switches

Switching program	Diagram number
Basic design	12
Y/Δ switch with reset from Y to 0	28
With countercurrent braking, with reset from Y to 0	29
As a voltage switch	30
With contactor control	31
With two rotation directions	21

Basic design
Scheme 12

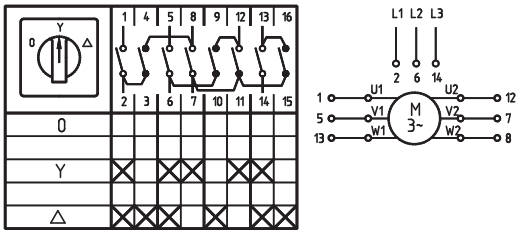

Y/Δ switch with reset from Y to 0
Scheme 28

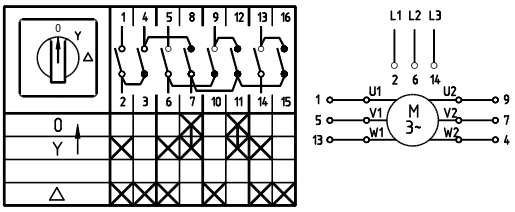

With countercurrent braking, with reset from Y to 0
Scheme 29

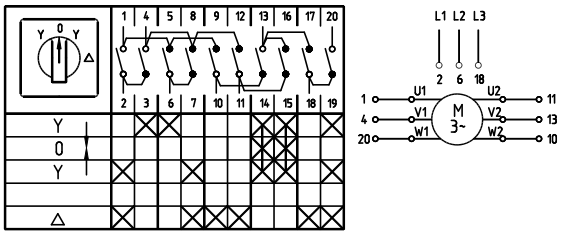

As a voltage switch
Scheme 30

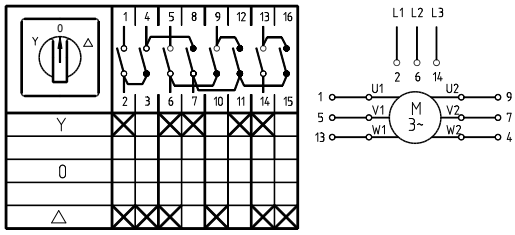

With contactor control
Scheme 31

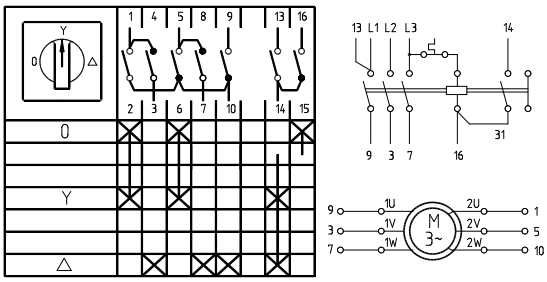

With two rotation directions
Scheme 21

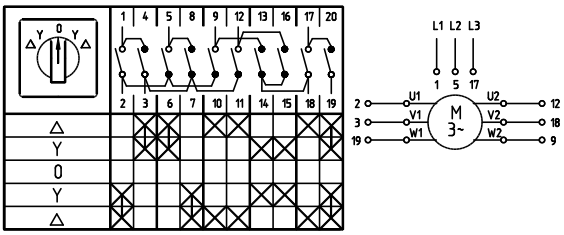

Dahlander system switches

Switching program	Diagram number
Two-speed Δ-0-YY	13
Two-speed 0-Δ-YY	19
Two-speed bidirectional YY-Δ-0-Δ-YY	20
Two-speed contactor-controlled	32

Two-speed Δ-0-YY
Scheme 13

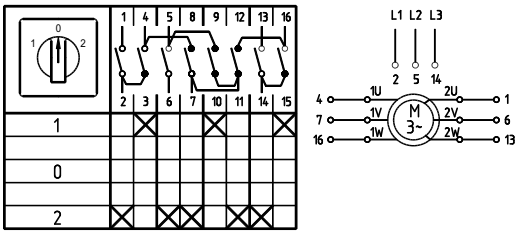

Two-speed 0-Δ-YY
Scheme 19

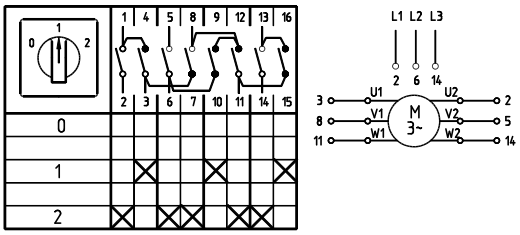

Two-speed bidirectional YY-Δ-0-Δ-YY
Scheme 7620

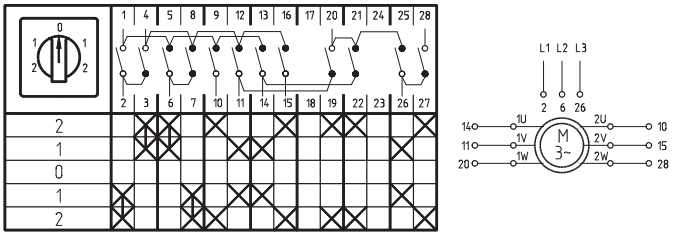

Two-speed contactor-controlled
Scheme 32

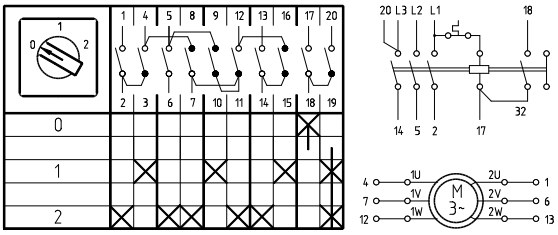

Double-winding motor switches

Switching program	Diagram number
1-0-2	53
0-1-2	22
two-directional	23
contactor-controlled	33

1-0-2
Scheme 53

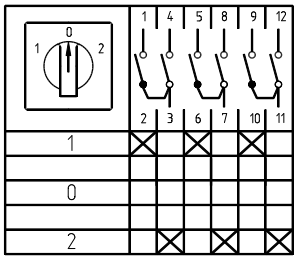

0-1-2
Scheme 22

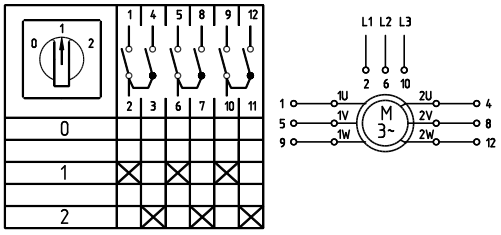

Two-directional
Scheme 23

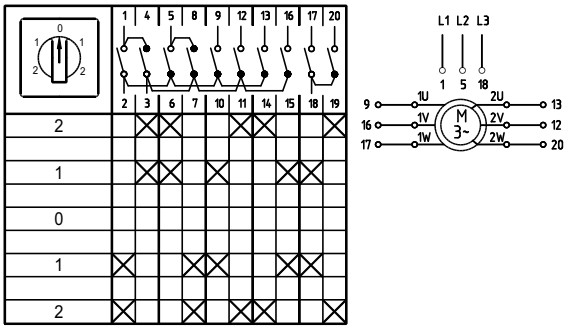

Contactor-controlled
Scheme 33

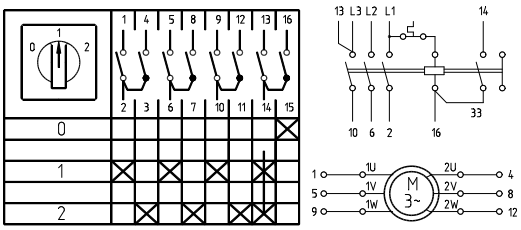

Motor switches

Three-speed motor switches

Switching program	Diagram number
2 windings 0-Δ-YY-Y (3- poles in Dahlander system)	34
2 windings 0-Δ-YY-Y (1 and 2 speeds in Dahlander system)	35
2 windings 0-Δ-YY-Y (2 and 3 speeds in Dahlander system)	36

2 windings 0-Δ-YY-Y (3- poles in Dahlander system)
Scheme 34

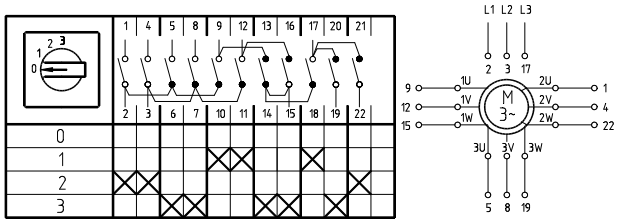

2 windings 0-Δ-YY-Y (1 and 2 speeds in Dahlander system)
Scheme 35

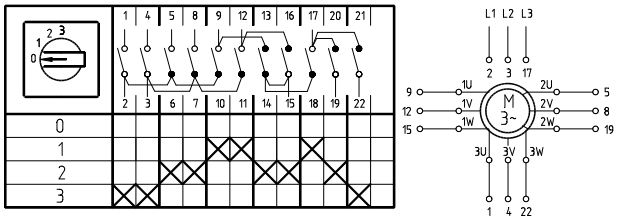

2 windings 0-Δ-YY-Y (2 and 3 speeds in Dahlander system)
Scheme 36

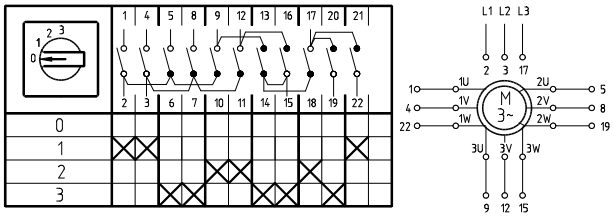

Motor reversing switches

Switching program	Diagram number
2-pole	24
2-pole, reset to 0 position	25
3-pole	11
3-pole, reset to 0 position	26
3-pole contactor-controlled	27
Single-phase motor starting switches	15

2-pole
Scheme 24

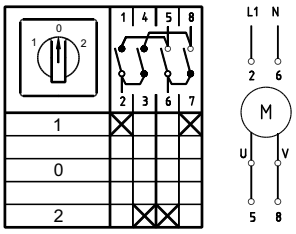

2-pole, reset to 0 position
Scheme 25

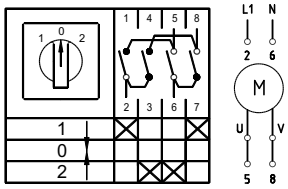

3-pole
Scheme 11

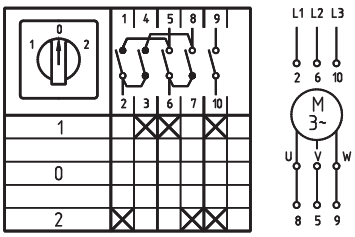

3-pole, reset to 0 position
Scheme 26

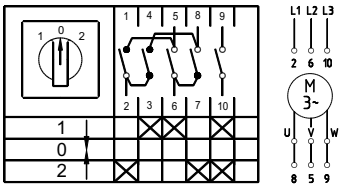

3-pole contactor-controlled
Scheme 27

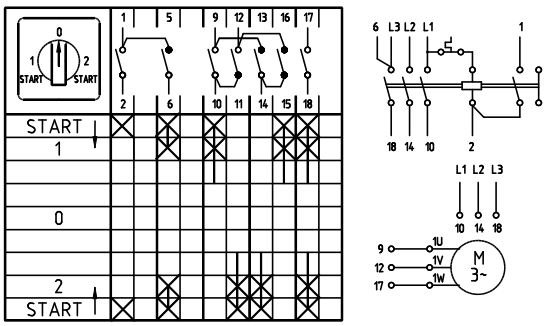

Single-phase motor starting switches
Scheme 15

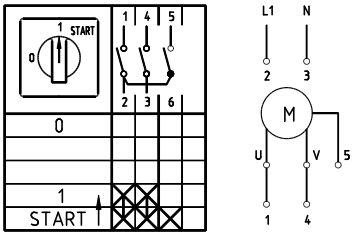

Additional switching program schemes

Scheme 385

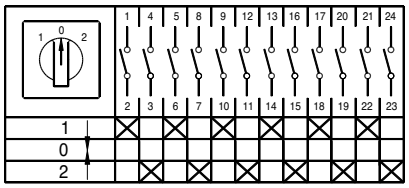

Scheme 462

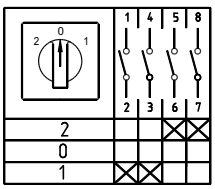

Scheme 463

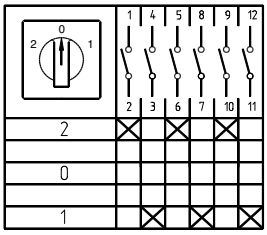

Scheme 467

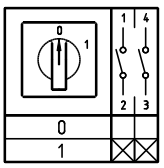

Scheme 468

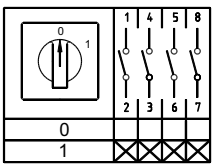

Scheme 498

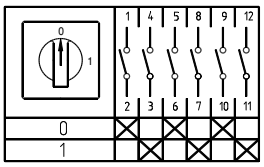

Scheme 500

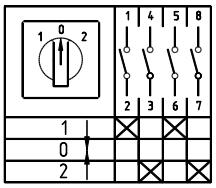

Scheme 512

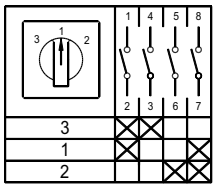

Scheme 516

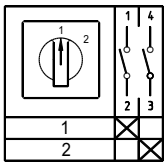

Scheme 519

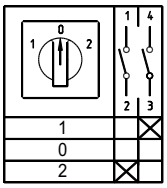

Scheme 520

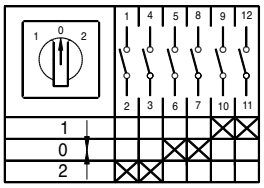

Scheme 521

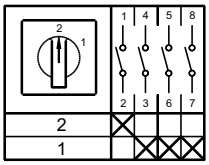

Scheme 525

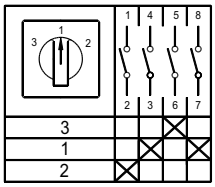

Scheme 526

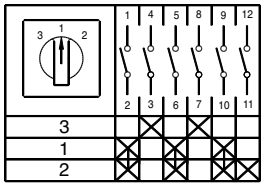

Scheme 529

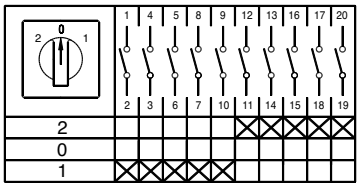

Scheme 534

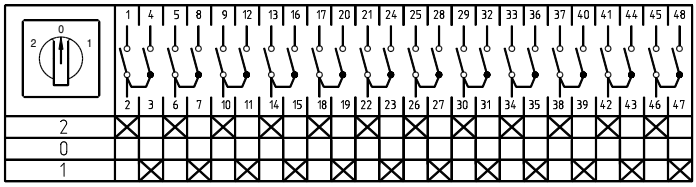

Scheme 543

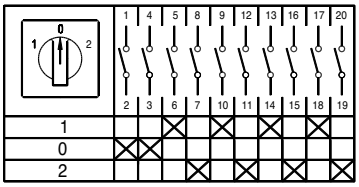

Scheme 544

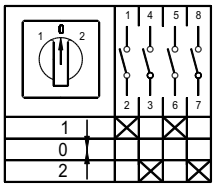

Scheme 545

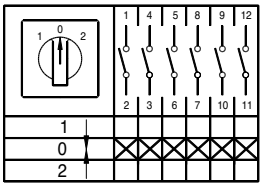

Scheme 572

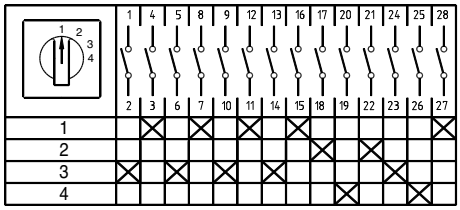

Scheme 573

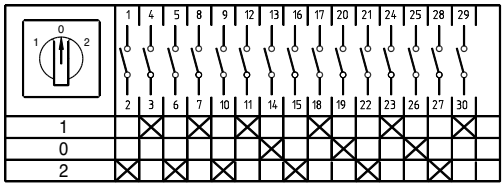

Scheme 583

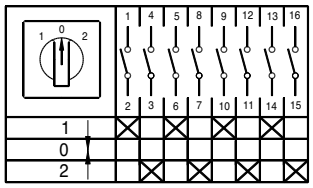

Scheme 584

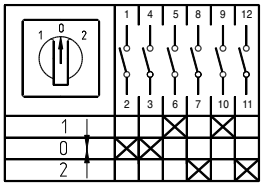

Scheme 587

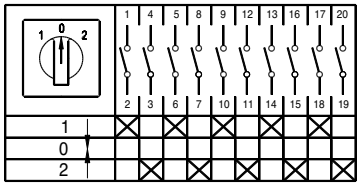

Scheme 588

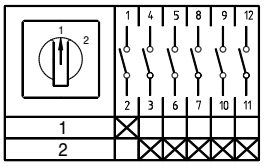

Scheme 596

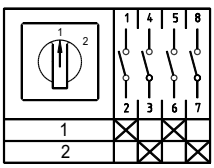

Scheme 620

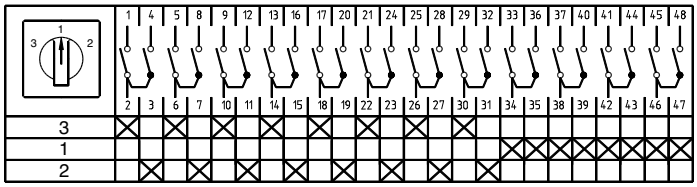

Scheme 622

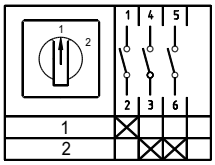

Scheme 632

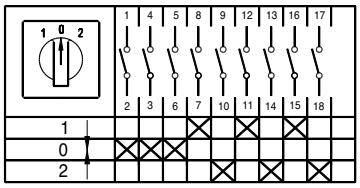

Scheme 633

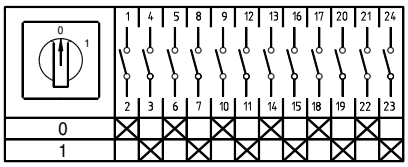

Scheme 635

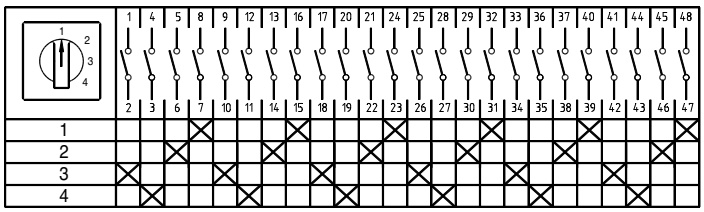

Scheme 637

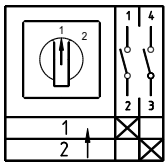

Scheme 648

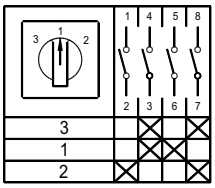

Scheme 649

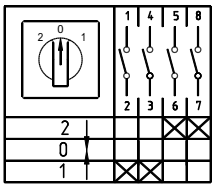

Scheme 650

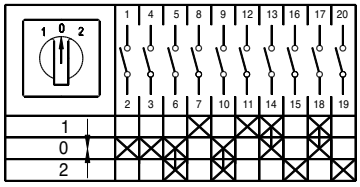

Scheme 657

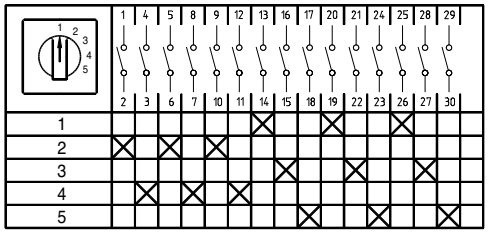

Scheme 659

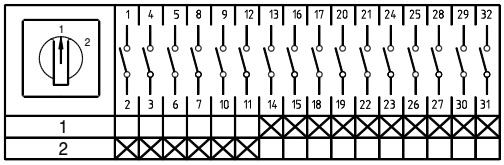

Scheme 660

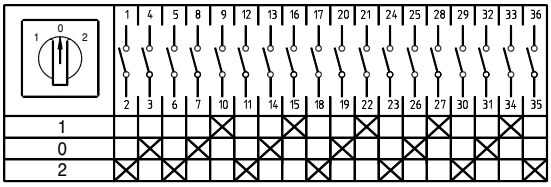

Scheme 662

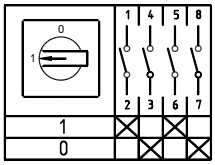

Scheme 663

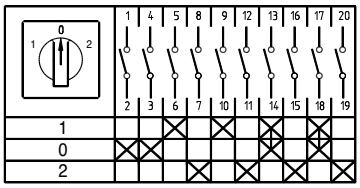

Scheme 664

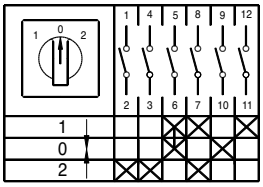

Scheme 665

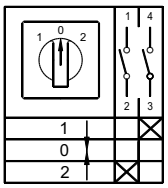

Scheme 678

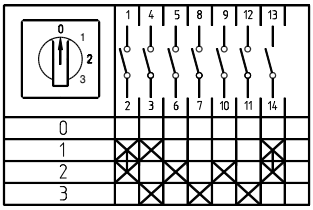

Scheme 692

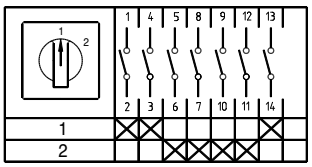

Scheme 693

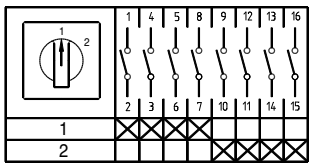

Scheme 701

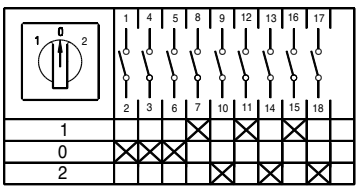

Scheme 713

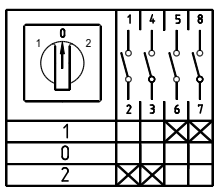

Scheme 737

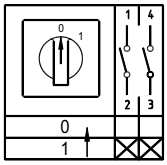

Scheme 765

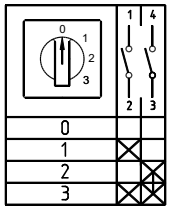

Scheme 768

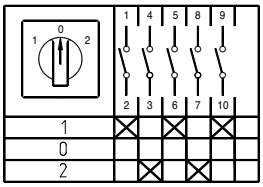

Scheme 770

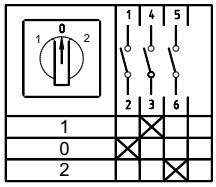

Scheme 771

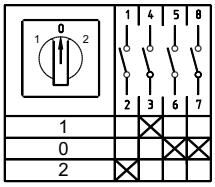

Scheme 800

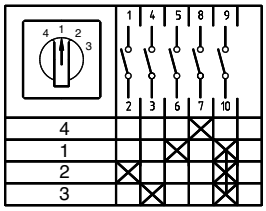

Scheme 812

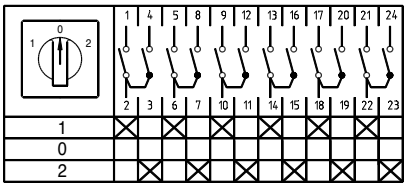

Scheme 824

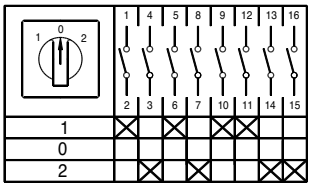

Scheme 854

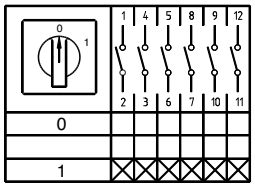

Scheme 884

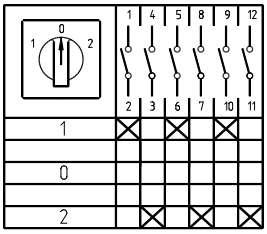

Scheme 888

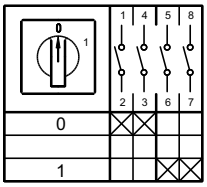

Scheme 916

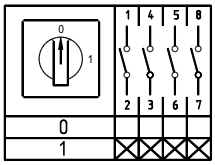

Scheme 926

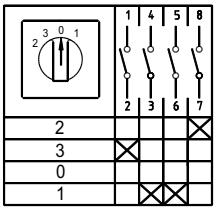

Scheme 930

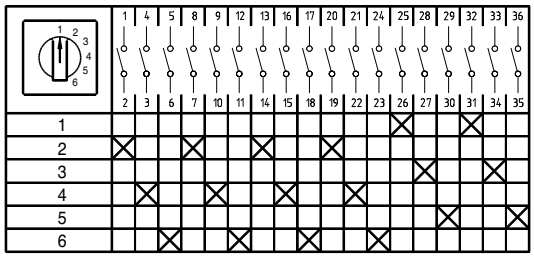

Scheme 991

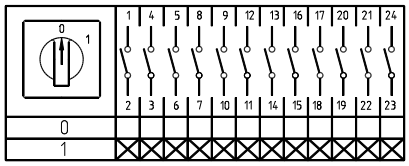

Scheme 1083

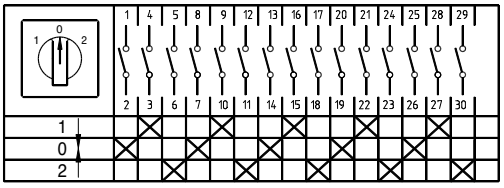

Scheme 1086

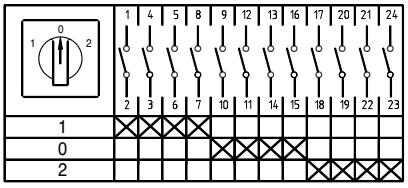

Scheme 1102

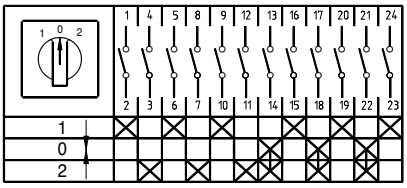

Scheme 1106

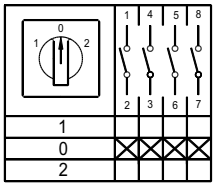

Scheme 1129

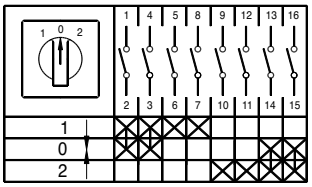

Scheme 1152

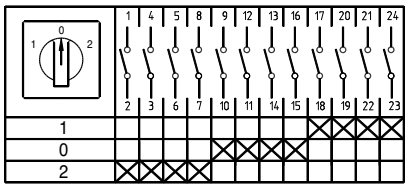

Scheme 1236

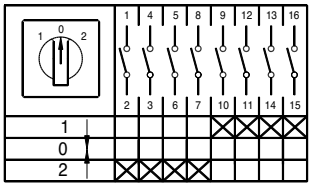

Scheme 1241

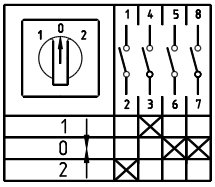

Scheme 3001

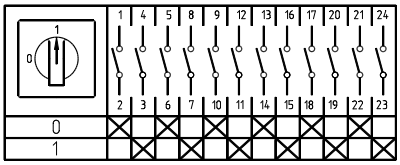

Scheme 3004

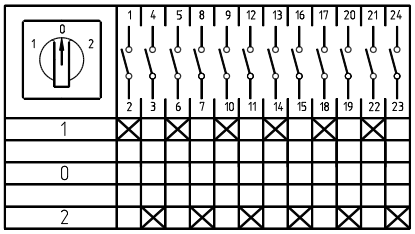

Scheme 4006

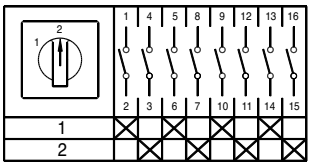

Scheme 8004

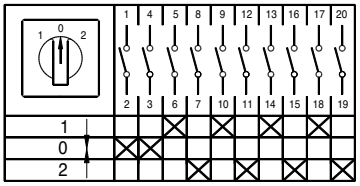

Scheme 8005

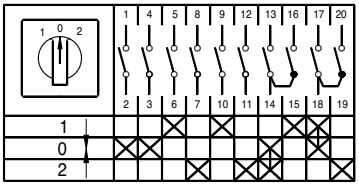

Scheme 9005

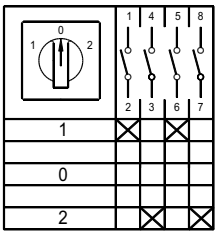

Table of equivalent schemes

WARNING!!! The «equivalent switches» of 4G series have a switching program that exactly repeats the program of the switch to be replaced. The dimensions, specifications and other parameters of the «equivalent switches» correspond to the values related to the specifications of the standard 4G series.

IMPORTANT: If there is no equivalent scheme in this catalog, request an additional equivalent scheme and it will be developed.

Number	4G	Number	4G	Number	4G	Number	4G	Number	4G
ПК, ПКУЗ		A2006	2005	A2036	2036	2072	2072	2109	2109
Б0101	637	2006	2006	2036	616	2073	2073	2110	2110
0101	516	A2008	2007	Б2037	2037	2074	2074	2111	2111
A0102	665	2008	2008	2037	92	2075	2075	2112	2112
0102	519	2009	2009	A2038	2041	2076	2076	2113	2113
Б0103	737	2010	2010	2038	2038	2079	2079	2114	2114
0103	91	2012	2012	2039	2039	2080	622	2115	2115
A1005	2088	2013	2013	2040	2040	2081	1084	2116	2116
0105	524	Б2014	2014	2044	2044	2082	2082	2117	2117
0106	2099	2014	596	A2047	2042	2083	2083	A2118	2118
0109	522	A2015	2015	2047	2047	2084	2084	2119	2119
0115	90	2015	525	2048	940	2085	2085	2120	2120
0116	2139	A2016	2011	2049	2049	2086	2086	2121	2121
0117	2140	2016	2016	2051	2051	2087	2087	2122	2122
A0118	2141	A2017	2017	2052	2052	2089	2089	2123	2123
0118	2142	2017	512	2054	2054	2090	2090	2124	2124
0119	2143	A2018	2018	2055	2055	2091	2091	2125	2125
0120	2148	2020	2020	2056	2056	2092	2092	2126	2126
0121	765	A2024	2024	2057	2057	2093	2093	2127	2127
A0122	2149	2024	672	2058	2058	A2094	2050	2128	2128
0123	2150	2026	2026	2059	521	2094	2094	2129	2129
0124	2151	A2027	2027	2060	754	2095	2095	2130	2130
0125	2152	2027	787	2061	2061	2096	2096	A2132	2077
A0126	2153	A2028	2028	2062	2062	2098	2098	2132	2132
0127	2154	2028	698	2063	2063	2100	2100	A2133	2133
0128	2155	A2029	2019	2064	2064	A2101	2101	2134	2134
0129	2156	2029	2029	2065	531	2101	2101	2135	2135
0131	2157	A2030	2030	2066	2066	2102	2102	2136	2136
A2001	649	2030	785	2067	2067	2103	2103	2137	2137
2001	462	2031	2031	2068	908	2104	2104	2138	2138
A2002	766	A2032	2034	2069	2069	2105	2105	A2144	2146
2002	589	2032	2032	A2071	2071	2106	2106	2144	2144
2003	2003	2034	648	2071	905	2107	2107	A2145	2147
2004	699	2035	926	A2072	2033	2108	2108	2145	2145

Number	4G
A3001	2158
3001	2159
3002	3002
3003	3003
3004	2160
3005	3005
3006	3006
3007	3007
A3008	2161
3008	3008
A3010	3009
3010	3010
A3011	2162
3011	3011
3013	3013
3014	854
3015	3015
A3023	2163
3023	3023
3025	3025
A3026	3024
3026	3026
3027	3027
3028	3028
3029	3029
A3030	2164
3030	3030
A3031	2165
3031	3031
A3033	520
3033	742
3034	3034
3035	582
3036	3036
3037	673
3039	3039
A3040	3040
3041	3041
3043	3043
3044	3044
A3045	3038
3045	1082
3046	3046
3047	636
A3048	3042
3048	3048
3051	3051
A3052	3049
3052	3052
A3053	3050
3053	3053
3054	3054
3055	3055
A3056	3056
3056	844
A3057	2167
3057	3057
A3058	2168
3058	3058
3060	3060
3061	3061

Number	4G
3064	3059
A3065	3063
3065	786
3066	3066
3070	3070
3071	800
3072	3072
3073	3073
3074	3074
3075	3075
3076	3076
3077	3077
3078	3078
3079	757
3080	555
3082	588
3083	623
3085	3085
3086	3086
3087	3087
3088	3088
3089	3089
3090	1003
3091	597
3093	1085
3100	567
3103	674
3104	3104
3105	783
3106	3106
3107	3107
3108	3108
3109	3109
3110	3110
3112	3112
3114	3114
3117	3117
3118	3118
3121	3121
3122	3122
3123	3123
3124	3124
3126	3126
3127	3127
3128	3128
3129	3129
3130	3130
3131	3131
3132	3132
3133	3133
3134	3134
3135	3135
3136	3136
3137	3137
3138	3138
3139	3139
3140	3140
3141	3141
3142	3142
3143	3143
3144	3144

Number	4G
3145	3145
3146	3146
3147	947
3148	3148
3149	3149
3150	3150
3151	3151
3152	3152
3153	3153
3154	3154
3155	3155
3156	3156
3157	3157
3158	3158
3159	3159
3160	3160
3161	3161
3162	3162
3163	3163
3164	3164
3165	3165
3166	3166
3167	3167
3168	3168
3170	3170
3171	3171
3172	3172
3173	3173
3174	3174
3175	3175
3176	3176
3177	3177
3178	3178
3179	3179
3180	3180
3181	3181
3182	3182
3183	3183
3185	3185
3188	3188
3190	3190
3191	3191
3192	3192
A3193	3184
3193	3193
3194	3194
3195	3195

Number	4G
4011	4011
4012	4012
4013	4013
4015	4015
4017	4017
A4018	4018
4018	913
4019	4019
Б4020	3067
4020	4020
A4021	4021

Number	4G
4021	952
4022	931
4024	4024
A4025	4022
4025	4025
A4027	4027
4027	955
A4028	3068
4028	4028
4030	4030
4031	694
A4032	4029
4032	4032
4034	4034
A4036	4036
4036	527
A4037	691
4037	1043
4038	4038
4040	4040
4041	4041
A4042	4039
4042	4042
4043	532
4044	4044
4045	4045
4046	4046
4047	4047
A4048	4048
4048	850
4049	4049
4050	4050
4051	927
4052	4052
4052	861
4054	4054
4055	845
4056	4056
4057	4057
4058	4058
4059	4059
4060	4060
4061	956
4063	4063
4064	4064
4065	4065
4067	4067
4068	4068
A4069	4061
4069	4069
4071	4071
A4072	4033
4072	4072
4074	4074
4076	692
4078	4078
4079	4079
4080	4080
4081	1050
4082	4082
4083	4083

Number	4G
4084	4084
4085	4085
4086	4086
4087	4087
4088	4088
4089	4089
4090	4090
4091	4091
4092	4092
4093	958
4094	4094
4095	882
4096	530
4097	780
4098	715
4099	4099
4100	4100
4101	629
4102	4102
4103	4103
4104	4104
4105	4105
4106	4106
4108	693
4109	4109
4110	4110
4111	592
4112	4112
4113	4113
4114	678
4115	4115
4116	4116
4117	4117
4118	4118
4120	4120
4121	4121
4123	4123
4124	4124
4125	4125
4129	4129
4132	4132
4133	4133
4134	4134
4135	4135
4136	4136
4137	4137
4138	4138
4141	4141
4142	4142
4143	4143
4144	4144
4145	4145
4146	4146
4147	4147
4148	4148
4149	4149
4150	4150
4151	4151
4152	4153
4154	4154
4155	4155

Number	4G
4156	4156
4157	4157
4159	4159
4160	4160
4161	4161
4162	4162
4163	4163
4164	4164
4165	4165
4166	4166
4168	4168
4169	4169
4170	4170
4171	4171
4172	4172
4174	4174
A4177	4075
4177	4177

Number	4G
5001	5001
5002	5002
5003	5003
5004	5004
5005	5005
5006	528
5007	5007
5008	667
5009	5009
5010	5010
5013	5013
5014	987
5015	752
5016	5016
5017	5017
5018	5018
5019	5019
5020	5020
5022	5022
5023	5023
5024	5024
5028	529
5030	5030
5031	5031
5032	5032
5035	5035
5036	5036
5037	5037
5038	781
5039	5039
5041	671
5042	5042
5045	5045
5046	5046
5048	5048
5049	5049
5060	5060
5061	5061
5062	5062
5063	5063

Number	4G
5064	5064
5065	5065
5066	5066
5067	5067
5068	5068
5069	5069
5071	5071
5073	5073
5074	5074
A5075	3069
5075	5075
5076	5076
5078	5078
5079	5079
5080	5080
5082	5082
5083	5083
5085	5085
5086	5086
A5087	5087
5088	5088
5091	5091
5093	5093
5094	5094
5095	5095
5096	5096
5097	5097
5098	5098
5100	5100
5101	5101
5102	5102
5103	5103
5104	5104

Number	4G
6003	6003
6004	941
6005	944
6006	609
6008	6008
6009	6009
A6010	3084
6010	6010
6011	876
6013	1971
6014	923
6016	700
6017	904
6019	6019
6020	907
6022	6022
6023	6023
6024	975
6025	6025
6026	6026
6027	6027
6029	6029
6030	6030
6031	6031
6032	6032

Number	4G
6033	6033
6034	6034
6036	6036
6037	6037
6038	6038
6039	991
6040	6040
6041	6041
6042	6042
6044	6044
6052	6052
6055	6055
6056	6056
6057	6057
6059	6059
6061	6061
6062	6062
6063	6063
6064	6064
6066	6066
6067	6067
A6068	3092
6068	6068
6069	6069
6070	6070
A6071	6071
A6072	6072
6073	6073
6074	6074
6075	6075
6076	6076
6077	6077
6079	6079
6081	6081
6082	6082
6083	6083
6084	6084
6087	6087
6088	6088
6089	6089
A6091	3094
6091	77
A6092	3095
6092	6092
6093	6093
6094	6094

Number	4G
7006	2802

Number	4G
8012	658
8016	1781

Number	4G
УП	
3	888
6	929
9	828
16	835
A23	665
23	519
26	92
A29	1236
29	713
36	2790
39	2478
43	2789
A44	1131
44	1652
A45	1241
45	771
70	1118
85	2697
105	951
106	827
128	2778
A142	1132
142	2698
143	2776
150	1144
151	2822
186	1660
A202	1141
202	2699
225	2791
227	1584
254	959
278	1194
314	1407
322	812
327	924
330	2777
332	830
343	825
367	1740
398	1134
A426	1233
428	1058
440	1000
470	1106
474	1109
556	1801

Number	4G
МКФ	
11	662
22	9005
44	1434
1111	4006
1122	594
2222	590
111111	3001
112222	543
222222	3004
126а6а	1418
1266а6а	1296

Number	4G
ПКУ 2	
1	90
4	91
7	516
8	1199
10	55
12	10
17	2673
29	92
31	815
43	99
57	946
58	100
75	2969
95	1051
116	53
137	2824
150	1523

Number	4G
МКВ	
22	544
26	1419
1122	584
1266	1297
2222	583
112222	8004
222222	361
2266а	1298
22226а6а	965

Number	4G
ПВП	
101	90
102	91
201	10
215	92
220	3453
222	909
229	910
231	3379
302	588
303	1967
317	100
327	3448
328	53
331	3449
413	911
504	3304

Number	4G
SEZ s 10	
1102	91
1103	10
1104	92
1105	99
1106	100
2203	53
2253	56
2254	69
2352	86
2353	93
2401	109
2452	2897
9151	2898
JVL1106	2683

Number	4G
ПМОВ	
22	544
222	884
2222	591
2227	499
22222	587
111111	545
111222	632
112222	8004
112233	8004
112256	8005
113333	8004
115566	650
222222	385
222266	1868
222555	1102
125566Д63	3469
777777 д65	1902
1210з10з10з10з	1083

Number	4G
GANZ KK	
4036	66
4489	83
6001	91
6002	10
6005	52
6005	53
6008	11
6042	92
6044	92
6054	90
6094	51
6096	92
6099	75
6122	75
6169	51
6426	51
6432	75
9001	91
9002	10
9003	55
9004	56
9417	69
9432	75

Number	4G
ПМОФ	
111111	3001
111225	634
111888	686
112222	543
112244	802
112266	803
112277	604
112556	654
222222	3004
222444	658
222777Д15	573
223344	930
224466	801
225566	655
233317	572
333333	3004
444777	914
555666	798
778888	1335
111144Д43	606
111222Д86	1332
222888Д16	3467
227777Д133	3285
237777Д87	1216
334466Д26	794
444444Д46	660
555577Д84	3468
777777Д50	1901
888888Д39	635

Number	4G
MOELLER	
8007	66
8210	51
8211	52
8212	53
8214	201
8216	203
15431	51
15511	2980
15679	2830
15683	2829
15907	2828
8342	100
8223	69
15920	67

Number	4G
ABB	
0_A01_	90
0_A02_	91
0_A03_	10
0_A04_	92
0_A1_	90
0_A2_	91
0_A3_	10
0_S021_	107
0_S031_	108
0_S041_	109
0_ST31_	82
0_ST41_	83
0_U2_	52
0_U3_	53
0_U4_	75
0_URR1_	201
0_URR2_	202
0_V30_	66
0_WC1_	2807
Q_A6_	3406
Q_ST33_	3407

Number	4G
OBZOR	
1102	91
1103	10
1104	92
1105	99
1107	3374
1108	3376
2252	55
2253	56
2255	70
2351	3470
2451	83
2551	84
2202A8	3377
2205A8	3375

Number	4G
Schneider	
K.B-004T	3370
K.E-503W	3349
K_F-013NL	733
K_F-024NL	788
K10D-012QCH	123
K11-023NCH	2823
K1A-001ACH9	0
K1B-001S	3364
K1B-001UCH	51
K1 B-002ACH9	1
K1 B-002NCH	516
K1B-003TCH	3284
K1B-006TCH	201
K1B-006TLH	201
K1B-011UCH	2964
K2B-1002HLH	91
K1C-003NCH	2963
K1 D-002U	52
K1D-002ULH	52
K1 D-004ALH	92
K1D-012NCH	3437
K1D-012U	55
K1D-012UCH	55
K1D-024MLH	67
K2D-004HLH	92
K2D-012ULH	795
K1 F-003U	53
K1F-003ULH	53
K1F-006ALH	100
K1F-006N	85
K1F-006N	3434
K1F-013NCH	3436
K1F-013QLH	2986
K1F-013U	56
K1 F-027MLH	66
K1H-014NLH	2931
K1H-026MLH	3439
K2H-014ULH	796
K1 K-005U	76
K1K-015	70
K1M-016N	3435
K2M-033NL	3440
K21-023QCH	3438

Number	4G
Kraus&Naimer	
A004	67
A005	68
A007	66
A176	207
A200	90
A201	91
A202	10
A203	92
A210	51
A211	52
A212	53
A213	75
A214	201
A215	202
A216	203
A220	54
A221	55
A222	56
A223	69
A230	82
A231	83
A240	107
A251	87
A252	88
A271	94
A290	270
A291	271
A292	63
A293	272
A341	99
A342	100
A543	3378

Number	4G
LOVATO	

Numbers of standard LOVATO schemes match the 4G numbers. Example: 7GN20-91P corresponds to 4G 91 scheme.

WARNING!!!
The nomenclature database of 4G switches currently contains more than 3,000 items. Therefore, we considered it right to place only the most used schemes in this catalog. If necessary information about the item you are interested in is not available, please refer to the website www.keaz.ru or contact our personnel.

OptiFuse NH

Fuse elements

The OptiFuse NH series of fuse elements is designed to protect against short circuit and overload. The special design of the fuse element ensures current limitation and energy efficiency. The ceramic case filled with quartz sand withstands the energy of an electric arc in case of a short circuit.

Designation

OptiFuse NH 2 - 250 - 400AC - 0 - gG - UHL3

1 2 3 4 5 6 7 8

1	Series	OptiFuse				
2	Configuration	NH				
3	Fuse element dimension	00C	00	1	2	3
4	Rated current value	6, 10, 16, 20, 25, 32, 40, 50, 63, 80, 100, 125, 160, 200, 250, 315, 400, 500, 630				
5	Rated voltage value	400 AC				
6	Availability of a trip indicator	0 — no trip indicator		1 — with trip indicator		
7	Shutdown range	gG				
8	Climatic category designation as per GOST 15150	UHL3				

Series advantages

The modern technology of filling fuses with filler (ultrapure quartz sand) allows to achieve a high filling density, which ensures effective arc extinction.

The knives of the fuse elements and the contacts of the bases are made of pure electrical copper with a galvanic coating, which ensures a reduction in transient resistance and, accordingly, cost-effectiveness and long-term durability.

Low power loss rates and energy savings during operation are achieved thanks to modern design, manufacturing methods and materials used.

The fuse elements are made of pure electrical copper with tin soldering, which allows for a wide range of gG protective characteristics, i.e. protection against both short circuits and overcurrent.

The devices are optimally suited for use in conjunction with the fuse-switch-disconnectors and strip-type fuse-switch-disconnectors of the OptiBlock and OptiVert series.

The wedge shape of the input part of the knives allows to install the fuse in the holder with less effort while maintaining the best conductivity index.

Selection guide

Rated current In, A	OptiFuse fuse element dimension				
	NH00C	NH00	NH1	NH2	NH3
6	•	•			
10	•	•	•		
16	•	•	•		
20	•	•	•		
25	•	•	•		
32	•	•	•		
40	•	•	•	•	
50	•	•	•	•	
63	•	•	•	•	
80	•	•	•	•	
100	•	•	•	•	•
125	•	•	•	•	•
160	•	•	•	•	•
200			•	•	•
250			•	•	•
315				•	•
400				•	•
500					•
630					•

Selectivity

Selectivity in the use of protective devices plays an important role in the power distribution. The essential power depends on the correct calculation of the ratings of protective devices. OptiFuse NH series fuse elements, in combination with OptiBlock and OptiVert fuse-switch-disconnectors, make it possible to implement effective protection against short circuits and overcurrent while ensuring selectivity requirements.

OptiFuse NH fuse elements greatly simplify the selection of the desired rated value for installations without complex calculations: the coefficient between the adjacent rated values is 1.6, i.e. only the fuse that is closest to the short circuit area will work, and the fuses located further along the power supply line remain intact. Thus, OptiFuse NH fuses provide simple selective coordination.

Simple selective coordination

	32
	40
32	50
40	63
50	80
63	100
80	125
100	160
125	200
160	250
200	315
250	400
315	500
400	630
500	
630	

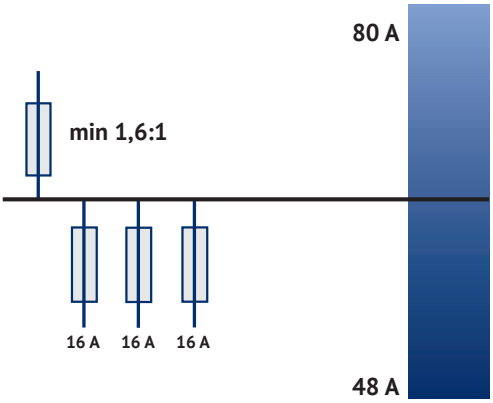

OptiFuse NH fuse elements are an excellent short-circuit protection element in terms of their maximum allowable cut-off current (peak value of the transmitted current), the ability to limit short-circuit current, and energy indicators. All this becomes especially important with an increase in voltage and the expected current strength during a short circuit (the greater the short circuit current, the faster the fuse will work). The breaking capacity of 60 kA and the current limitation of OptiFuse NH fuse elements provide reliable protection at high values of short-circuit current.

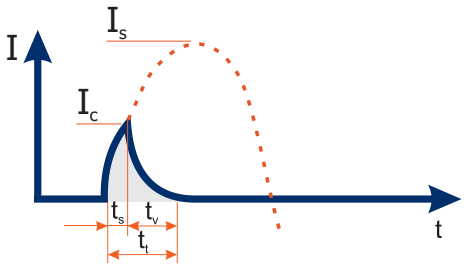

t_s is the fusing time of the heat element
t_v is the arcing time
t_t is the total trip time
I_c is the peak value of the current limited by the fuse
I_s is the estimated short-circuit current value

Items

Fuse elements without trip indicator

Fuse element series and dimension	Rated current In, A	Product name	Code
NH00C	6	OptiFuse NH00C-6-400AC-0-gG-УХЛ3	144547
	10	OptiFuse NH00C-10-400AC-0-gG-УХЛ3	144548
	16	OptiFuse NH00C-16-400AC-0-gG-УХЛ3	144549
	25	OptiFuse NH00C-25-400AC-0-gG-УХЛ3	144550
	32	OptiFuse NH00C-32-400AC-0-gG-УХЛ3	144551
	40	OptiFuse NH00C-40-400AC-0-gG-УХЛ3	144552
	50	OptiFuse NH00C-50-400AC-0-gG-УХЛ3	144553
	63	OptiFuse NH00C-63-400AC-0-gG-УХЛ3	144554
	80	OptiFuse NH00C-80-400AC-0-gG-УХЛ3	144555
	100	OptiFuse NH00C-100-400AC-0-gG-УХЛ3	144556
	125	OptiFuse NH00C-125-400AC-0-gG-УХЛ3	151420
	160	OptiFuse NH00C-160-400AC-0-gG-УХЛ3	151421
NH00	6	OptiFuse NH00-6-400AC-0-gG-УХЛ3	144607
	10	OptiFuse NH00-10-400AC-0-gG-УХЛ3	144608
	16	OptiFuse NH00-16-400AC-0-gG-УХЛ3	144609
	20	OptiFuse NH00-20-400AC-0-gG-УХЛ3	144610
	25	OptiFuse NH00-25-400AC-0-gG-УХЛ3	144611
	32	OptiFuse NH00-32-400AC-0-gG-УХЛ3	144612
	40	OptiFuse NH00-40-400AC-0-gG-УХЛ3	144613
	50	OptiFuse NH00-50-400AC-0-gG-УХЛ3	144614
	63	OptiFuse NH00-63-400AC-0-gG-УХЛ3	144615
	80	OptiFuse NH00-80-400AC-0-gG-УХЛ3	144616
	100	OptiFuse NH00-100-400AC-0-gG-УХЛ3	144617
	125	OptiFuse NH00-125-400AC-0-gG-УХЛ3	144618
	160	OptiFuse NH00-160-400AC-0-gG-УХЛ3	144619
NH1	16	OptiFuse NH1-16-400AC-0-gG-УХЛ3	144686
	20	OptiFuse NH1-20-400AC-0-gG-УХЛ3	144687
	32	OptiFuse NH1-32-400AC-0-gG-УХЛ3	144688
	63	OptiFuse NH1-63-400AC-0-gG-УХЛ3	144689
	80	OptiFuse NH1-80-400AC-0-gG-УХЛ3	144690
	100	OptiFuse NH1-100-400AC-0-gG-УХЛ3	144691
	125	OptiFuse NH1-125-400AC-0-gG-УХЛ3	144692
	160	OptiFuse NH1-160-400AC-0-gG-УХЛ3	144693
	200	OptiFuse NH1-200-400AC-0-gG-УХЛ3	144694
	250	OptiFuse NH1-250-400AC-0-gG-УХЛ3	144695
NH2	40	OptiFuse NH2-40-400AC-0-gG-УХЛ3	144751
	50	OptiFuse NH2-50-400AC-0-gG-УХЛ3	144752
	63	OptiFuse NH2-63-400AC-0-gG-УХЛ3	144753
	80	OptiFuse NH2-80-400AC-0-gG-УХЛ3	144754
	100	OptiFuse NH2-100-400AC-0-gG-УХЛ3	144755
	125	OptiFuse NH2-125-400AC-0-gG-УХЛ3	144756
	160	OptiFuse NH2-160-400AC-0-gG-УХЛ3	144757
	200	OptiFuse NH2-200-400AC-0-gG-УХЛ3	144758
	250	OptiFuse NH2-250-400AC-0-gG-УХЛ3	144759
	315	OptiFuse NH2-315-400AC-0-gG-УХЛ3	144760
	400	OptiFuse NH2-400-400AC-0-gG-УХЛ3	144761
NH3	100	OptiFuse NH3-100-400AC-0-gG-УХЛ3	144817
	125	OptiFuse NH3-125-400AC-0-gG-УХЛ3	144818
	160	OptiFuse NH3-160-400AC-0-gG-УХЛ3	144819
	200	OptiFuse NH3-200-400AC-0-gG-УХЛ3	144820
	250	OptiFuse NH3-250-400AC-0-gG-УХЛ3	144821
	315	OptiFuse NH3-315-400AC-0-gG-УХЛ3	144822
	400	OptiFuse NH3-400-400AC-0-gG-УХЛ3	144823
	500	OptiFuse NH3-500-400AC-0-gG-УХЛ3	144824
	630	OptiFuse NH3-630-400AC-0-gG-УХЛ3	144825

Codes indicated in the chapter tables are subject to change. If you did not find the necessary codes on the website, please contact KEAZ customer service.

Technical specification

Electrical specifications	
Rated current In, A	6–630
Rated voltage Un, V	400AC
Breaking capacity I_1, kA	60
Characteristic of the cut-off range	gG
Operating conditions	
Climatic version	UHL3
Operating temperature range, °C	-60 to +40
Group of operating conditions	M7, M25
Operating position in space	vertical, horizontal

Power loss in nominal mode of use

Nominal currents, A	OptiFuse series				
	NH00C	NH00	NH1	NH2	NH3
	Losses, W				
6	0,8	0,8			-
10	1,6	1,6			-
16	2,0	2,0			-
20	2,4	2,4			-
25	2,8	2,8			-
32	3,2	3,2			-
40	3,8	3,8			-
50	4,3	4,3			-
63	5,8	5,8	6,2	6,2	-
80	6,8	6,8	7,3	7,9	-
100	7,5	7,5	10,2	10,2	-
125	8,5	8,5	13	13	-
160	11,5	11,5	16,2	16,2	16,2
200	-	-	17	17,2	17
250	-	-	22	22,7	22
315	-	-	-	26,8	26,8
400	-	-	-	29,2	29,2
500	-	-	-	-	40,3
630	-	-	-	-	42,2

Weight (kg)

Rated current In, A	Fuse element dimension OptiFuse				
	NH00C	NH00	NH1	NH2	NH3
6–160	0,12	0,16	0,23	0,38	0,57
200–250	-	-	0,36	0,38	0,57
315–400	-	-	-	0,56	0,57
500–630	-	-	-	-	0,93

Overall dimensions (mm)

OptiFuse NH-00C

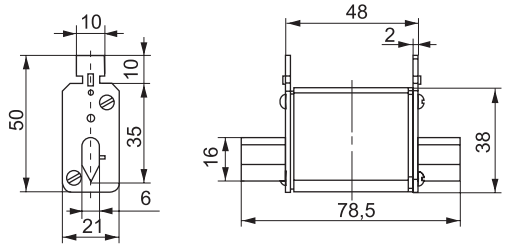

OptiFuse NH-1 (6-160 A)

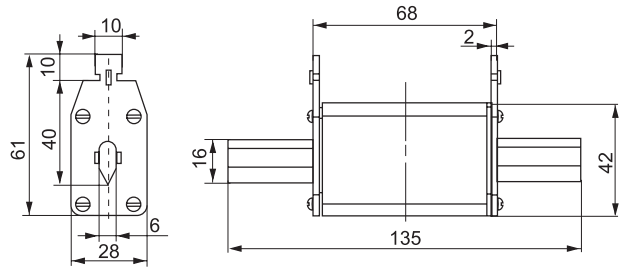

OptiFuse NH-00

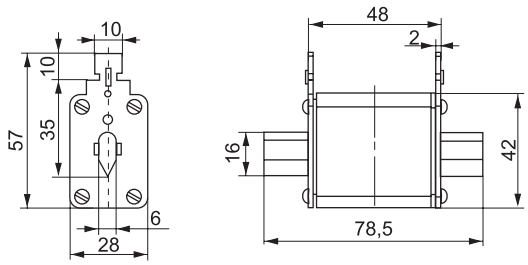

OptiFuse NH-1 (200-250 A)

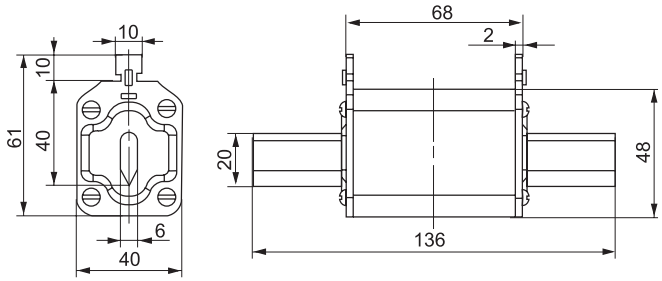

OptiFuse NH-2 (40-250 A)

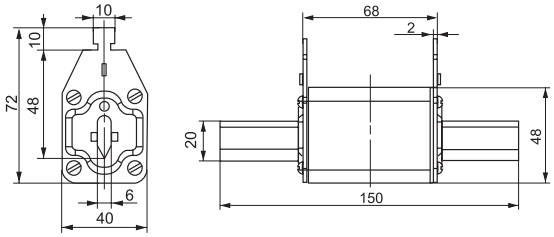

OptiFuse NH-3 (100-400 A)

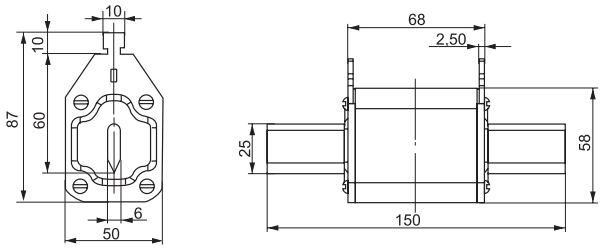

OptiFuse NH-2 (315-400 A)

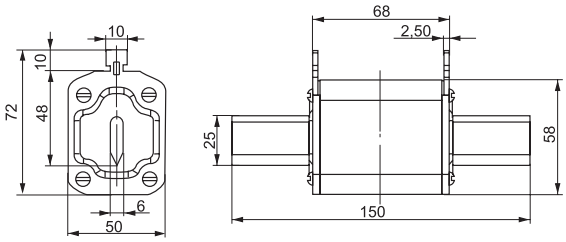

OptiFuse NH-3 (500-630 A)

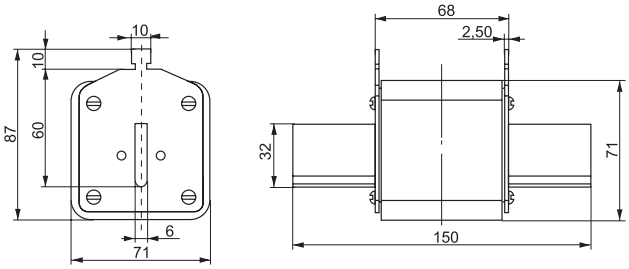

Current and time characteristics

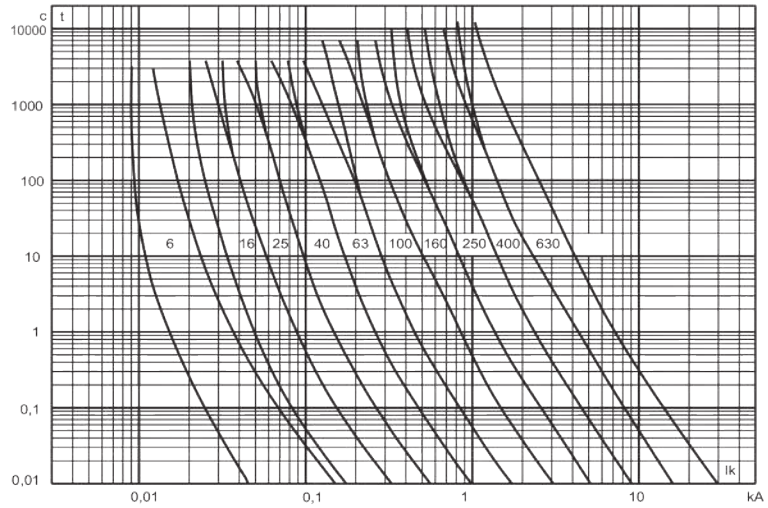

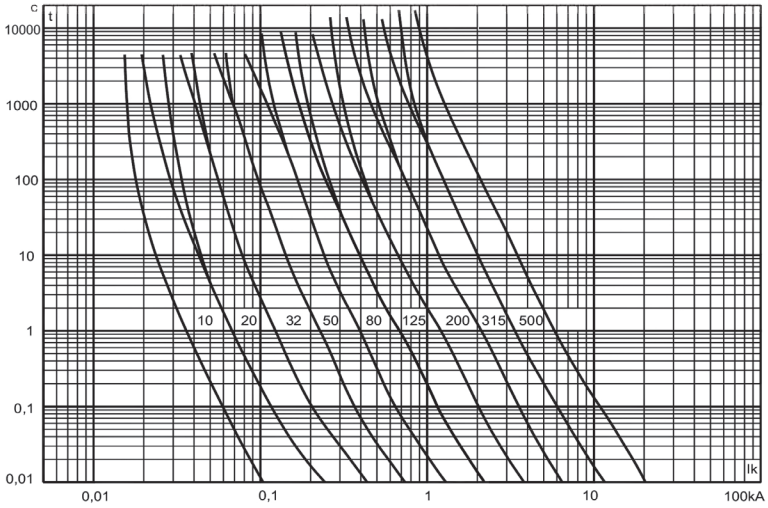

Cut-off current characteristics

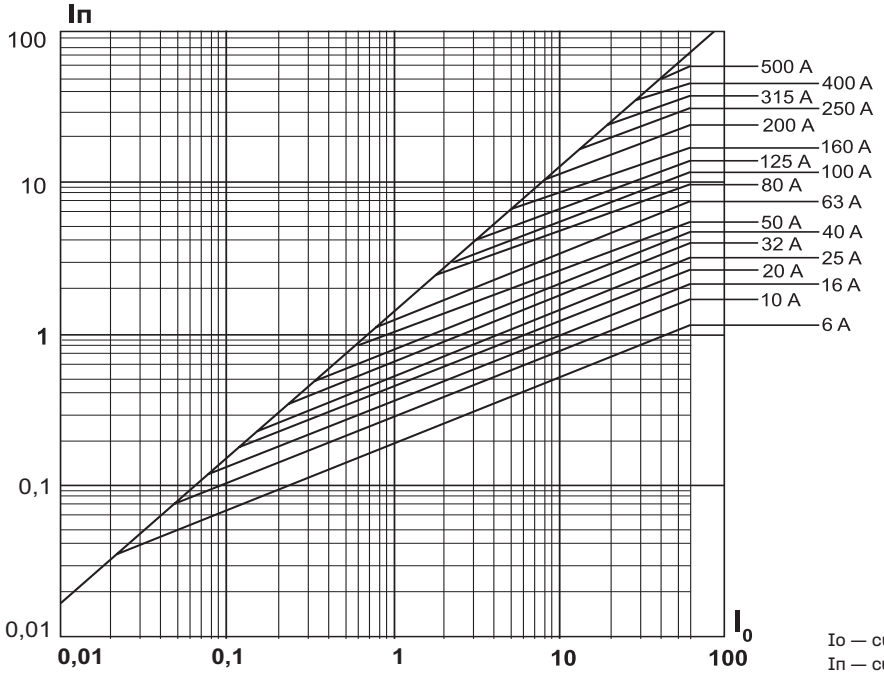

Io — cut-off current, kA
In — current passed by the fuse, kA

OptiFuse FR

Fast-response fuses for 40 to 4000 A

OptiFuse FR series fuses are designed to protect semiconductor thyristor electric drives, rectifiers for electrolysis and other types of converter devices, while fuses can also be used on electric motive power. Industries of application:
- railways;
- underground railway;
- metallurgy;
- energy.

Designation

OptiFuse FR S33 600V - 1800A - D08

1 2 3 4 5

1	Series	OptiFuse FR
2	Dimensions	S30, S31, S32, S33, S44, S70, S71, S72, S73, S84
3	Rated voltage Un, V	450, 500, 550, 600, 690, 750, 800, 850, 900, 950, 1000, 1100, 1250
4	Rated current In, A	40, 50, 63, 80, 100, 125, 200, 250, 280, 315, 350, 400, 450, 500, 550, 630, 700, 800, 900, 1000, 1100, 1250, 1400, 1500, 1600, 1700, 1800, 2000, 2200, 2500, 2700, 3000, 3500, 4000
5	Connection type designation	TF — countersunk contact caps; D08, D11 — contact knives. D08 — the fuse length, taking into account the length of the contact knives, is 104 mm D11 — the fuse length, taking into account the length of the contact knives, is 134mm

Series advantages

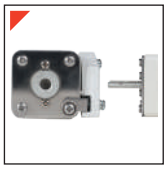

Contact designs: knife contacts and countersunk contact caps

Additional contacts for alarm operation

Anti-corrosive coating of contacts

For quick operation, the working areas of fuse elements are made of silver

Items

OptiFuse FR S30, S31, S32, S33. TF connection type

Appearance	Dimensions	Rated voltage AC, Un, V	Rated current, A	I²t (A² · c)		Dissipated power, W	Product name	Code
				Melting time, s	Circuit break at Un, A			
	S30	690/700	40	40	270	9	OptiFuse FR-S30-690V-40A-TF	345685
	S30	690/700	50	77	515	11	OptiFuse FR-S30-690V-50A-TF	345686
	S30	690/700	63	115	770	14	OptiFuse FR-S30-690V-63A-TF	345687
	S30	690/700	80	185	1250	18	OptiFuse FR-S30-690V-80A-TF	345688
	S30	690/700	100	360	2450	21	OptiFuse FR-S30-690V-100A-TF	345689
	S30	690/700	125	550	3700	26	OptiFuse FR-S30-690V-125A-TF	345690
	S30	690/700	160	1100	7500	30	OptiFuse FR-S30-690V-160A-TF	345691
	S30	690/700	200	2200	15000	35	OptiFuse FR-S30-690V-200A-TF	345692
	S30	690/700	250	4200	28500	40	OptiFuse FR-S30-690V-250A-TF	345693
	S30	690/700	315	7000	46500	50	OptiFuse FR-S30-690V-315A-TF	345694
	S30	690/700	350	10000	68500	55	OptiFuse FR-S30-690V-350A-TF	345695
	S30	690/700	400	15000	105000	60	OptiFuse FR-S30-690V-400A-TF	345696
	S30	690/700	450	21000	140000	65	OptiFuse FR-S30-690V-450A-TF	345697
	S30	690/700	500	27000	180000	70	OptiFuse FR-S30-690V-500A-TF	345698
	S30	690/700	550	34000	230000	75	OptiFuse FR-S30-690V-550A-TF	345699
	S30	690/700	630	48500	325000	80	OptiFuse FR-S30-690V-630A-TF	345700
	S31	690/700	160	900	5500	35	OptiFuse FR-S31-690V-160A-TF	345733
	S31	690/700	200	1650	11500	45	OptiFuse FR-S31-690V-200A-TF	345734
	S31	690/700	250	3100	21000	55	OptiFuse FR-S31-690V-250A-TF	345735
	S31	690/700	315	6200	42000	58	OptiFuse FR-S31-690V-315A-TF	345736
	S31	690/700	350	8500	59000	60	OptiFuse FR-S31-690V-350A-TF	345737
	S31	690/700	400	13500	91500	65	OptiFuse FR-S31-690V-400A-TF	345738
	S31	690/700	450	17000	120000	70	OptiFuse FR-S31-690V-450A-TF	345739
	S31	690/700	500	25000	170000	72	OptiFuse FR-S31-690V-500A-TF	345740
	S31	690/700	550	34000	230000	75	OptiFuse FR-S31-690V-550A-TF	345741
	S31	690/700	630	52000	350000	80	OptiFuse FR-S31-690V-630A-TF	345742
	S31	690/700	700	69500	465000	85	OptiFuse FR-S31-690V-700A-TF	345743
	S31	690/700	800	105000	725000	95	OptiFuse FR-S31-690V-800A-TF	345744
	S31	550	900	160000	800000	99	OptiFuse FR-S31-550V-900A-TF	345745
	S32	690/700	315	6000	40000	55	OptiFuse FR-S32-690V-315A-TF	345771
	S32	690/700	350	8000	55000	60	OptiFuse FR-S32-690V-350A-TF	345772
	S32	690/700	400	11000	74000	65	OptiFuse FR-S32-690V-400A-TF	345773
	S32	690/700	450	15500	105000	70	OptiFuse FR-S32-690V-450A-TF	345774
	S32	690/700	500	21500	145000	75	OptiFuse FR-S32-690V-500A-TF	345775
	S32	690/700	550	28000	190000	80	OptiFuse FR-S32-690V-550A-TF	345776
	S32	690/700	630	41000	275000	90	OptiFuse FR-S32-690V-630A-TF	345777
	S32	690/700	700	60500	405000	95	OptiFuse FR-S32-690V-700A-TF	345778
	S32	690/700	800	86000	575000	105	OptiFuse FR-S32-690V-800A-TF	345779
	S32	690/700	900	125000	840000	110	OptiFuse FR-S32-690V-900A-TF	345780
	S32	690/700	1000	180000	1250000	115	OptiFuse FR-S32-690V-1000A-TF	345781
	S32	600	1100	245000	1600000	120	OptiFuse FR-S32-600V-1100A-TF	345782
	S32	550	1250	365000	2400000	130	OptiFuse FR-S32-550V-1250A-TF	345783
	S32	500	1400	400000	3500000	145	OptiFuse FR-S32-500V-1400A-TF	345784
	S32	500	1600	620000	4300000	160	OptiFuse FR-S32-500V-1600A-TF	345785
	S32	450	1800	900000	5700000	170	OptiFuse FR-S32-450V-1800A-TF	345786
	S33	690/700	450	13500	85000	70	OptiFuse FR-S33-690V-450A-TF	345800
	S33	690/700	500	14000	95000	95	OptiFuse FR-S33-690V-500A-TF	345801
	S33	690/700	550	19500	135000	100	OptiFuse FR-S33-690V-550A-TF	345802
	S33	690/700	630	31000	210000	105	OptiFuse FR-S33-690V-630A-TF	345803
	S33	690/700	700	44500	300000	110	OptiFuse FR-S33-690V-700A-TF	345804
	S33	690/700	800	69500	465000	115	OptiFuse FR-S33-690V-800A-TF	345805
	S33	690/700	900	100000	670000	120	OptiFuse FR-S33-690V-900A-TF	345806
	S33	690/700	1000	140000	945000	125	OptiFuse FR-S33-690V-1000A-TF	345807
	S33	690/700	1100	190000	1300000	130	OptiFuse FR-S33-690V-1100A-TF	345808
	S33	690/700	1250	290000	1950000	140	OptiFuse FR-S33-690V-1250A-TF	345809
	S33	690/700	1400	370000	3100000	155	OptiFuse FR-S33-690V-1400A-TF	345810
	S33	600	1500	450000	3600000	158	OptiFuse FR-S33-600V-1500A-TF	345811
	S33	600	1600	580000	3900000	160	OptiFuse FR-S33-600V-1600A-TF	345812
	S33	600	1800	880000	5250000	165	OptiFuse FR-S33-600V-1800A-TF	345813
	S33	550	2000	1150000	6350000	175	OptiFuse FR-S33-550V-2000A-TF	345814
	S33	500	2250	1250000	7500000	180	OptiFuse FR-S33-500V-2250A-TF	345815
	S33	450	2500	1870000	9000000	190	OptiFuse FR-S33-450V-2500A-TF	345816

OptiFuse FR S30, S31, S32, S33. D08 connection type

Appearance	Dimensions	Rated voltage AC, Un, V	Rated current, A	I²t (A² · c)		Dissipated power, W	Product name	Code
				Melting time, s	Circuit break at Un, A			
	S30	690/700	40	40	270	9	OptiFuse FR-S30-690V-40A-D08	345701
	S30	690/700	50	77	515	11	OptiFuse FR-S30-690V-50A-D08	345702
	S30	690/700	63	115	770	14	OptiFuse FR-S30-690V-63A-D08	345703
	S30	690/700	80	185	1250	18	OptiFuse FR-S30-690V-80A-D08	345704
	S30	690/700	100	360	2450	21	OptiFuse FR-S30-690V-100A-D08	345705
	S30	690/700	125	550	3700	26	OptiFuse FR-S30-690V-125A-D08	345706
	S30	690/700	160	1100	7500	30	OptiFuse FR-S30-690V-160A-D08	345707
	S30	690/700	200	2200	15000	35	OptiFuse FR-S30-690V-200A-D08	345708
	S30	690/700	250	4200	28500	40	OptiFuse FR-S30-690V-250A-D08	345709
	S30	690/700	315	7000	46500	50	OptiFuse FR-S30-690V-315A-D08	345710
	S30	690/700	350	10000	68500	55	OptiFuse FR-S30-690V-350A-D08	345711
	S30	690/700	400	15000	105000	60	OptiFuse FR-S30-690V-400A-D08	345712
	S30	690/700	450	21000	140000	65	OptiFuse FR-S30-690V-450A-D08	345713
	S30	690/700	500	27000	180000	70	OptiFuse FR-S30-690V-500A-D08	345714
	S30	690/700	550	34000	230000	75	OptiFuse FR-S30-690V-550A-D08	345715
	S30	690/700	630	48500	325000	80	OptiFuse FR-S30-690V-630A-D08	345716
	S31	690/700	160	900	5500	35	OptiFuse FR-S31-690V-160A-D08	345746
	S31	690/700	200	1650	11500	45	OptiFuse FR-S31-690V-200A-D08	345747
	S31	690/700	250	3100	21000	55	OptiFuse FR-S31-690V-250A-D08	345748
	S31	690/700	315	6200	42000	58	OptiFuse FR-S31-690V-315A-D08	345749
	S31	690/700	350	8500	59000	60	OptiFuse FR-S31-690V-350A-D08	345750
	S31	690/700	400	13500	91500	65	OptiFuse FR-S31-690V-400A-D08	345751
	S31	690/700	450	17000	120000	70	OptiFuse FR-S31-690V-450A-D08	345752
	S31	690/700	500	25000	170000	72	OptiFuse FR-S31-690V-500A-D08	345753
	S31	690/700	550	34000	230000	75	OptiFuse FR-S31-690V-550A-D08	345754
	S31	690/700	630	52000	350000	80	OptiFuse FR-S31-690V-630A-D08	345755
	S31	690/700	700	69500	465000	85	OptiFuse FR-S31-690V-700A-D08	345756
	S31	690/700	800	105000	725000	95	OptiFuse FR-S31-690V-800A-D08	345757
	S31	550	900	160000	800000	99	OptiFuse FR-S31-550V-900A-D08	345758
	S32	690/700	315	6000	40000	55	OptiFuse FR-S32-690V-315A-D08	347667
	S32	690/700	350	8000	55000	60	OptiFuse FR-S32-690V-350A-D08	347668
	S32	690/700	400	11000	74000	65	OptiFuse FR-S32-690V-400A-D08	347669
	S32	690/700	450	15500	105000	70	OptiFuse FR-S32-690V-450A-D08	347670
	S32	690/700	500	21500	145000	75	OptiFuse FR-S32-690V-500A-D08	347671
	S32	690/700	550	28000	190000	80	OptiFuse FR-S32-690V-550A-D08	347672
	S32	690/700	630	41000	275000	90	OptiFuse FR-S32-690V-630A-D08	347673
	S32	690/700	700	60500	405000	95	OptiFuse FR-S32-690V-700A-D08	347674
	S32	690/700	800	86000	575000	105	OptiFuse FR-S32-690V-800A-D08	347675
	S32	690/700	900	125000	840000	110	OptiFuse FR-S32-690V-900A-D08	347676
	S32	690/700	1000	180000	1250000	115	OptiFuse FR-S32-690V-1000A-D08	347677
	S32	600	1100	245000	1600000	120	OptiFuse FR-S32-600V-1100A-D08	347678
	S32	550	1250	365000	2400000	130	OptiFuse FR-S32-550V-1250A-D08	347679
	S33	690/700	450	13500	85000	70	OptiFuse FR-S33-690V-450A-D08	345817
	S33	690/700	500	14000	95000	95	OptiFuse FR-S33-690V-500A-D08	345818
	S33	690/700	550	19500	135000	100	OptiFuse FR-S33-690V-550A-D08	345819
	S33	690/700	630	31000	210000	105	OptiFuse FR-S33-690V-630A-D08	345820
	S33	690/700	700	44500	300000	110	OptiFuse FR-S33-690V-700A-D08	345821
	S33	690/700	800	69500	465000	115	OptiFuse FR-S33-690V-800A-D08	345822
	S33	690/700	900	100000	670000	120	OptiFuse FR-S33-690V-900A-D08	345823
	S33	690/700	1000	140000	945000	125	OptiFuse FR-S33-690V-1000A-D08	345824
	S33	690/700	1100	190000	1300000	130	OptiFuse FR-S33-690V-1100A-D08	345825
	S33	690/700	1250	290000	1950000	140	OptiFuse FR-S33-690V-1250A-D08	345826
	S33	690/700	1400	370000	3100000	155	OptiFuse FR-S33-690V-1400A-D08	345827
	S33	600	1500	450000	3500000	158	OptiFuse FR-S33-600V-1500A-D08	345828
	S33	600	1600	580000	3900000	160	OptiFuse FR-S33-600V-1600A-D08	345829
	S33	600	1800	880000	5250000	165	OptiFuse FR-S33-600V-1800A-D08	345830
	S33	550	2000	1150000	6350000	175	OptiFuse FR-S33-550V-2000A-D08	345831

OptiFuse FR S30, S31, S32, S33. D11 connection type

Appearance	Dimensions	Rated voltage AC, Un, V	Rated current, A	I²t (A² · c)		Dissipated power, W	Product name	Code
				Melting time, s	Circuit break at Un, A			
	S30	690/700	40	40	270	9	OptiFuse FR-S30-690V-40A-D11	345717
	S30	690/700	50	77	515	11	OptiFuse FR-S30-690V-50A-D11	345718
	S30	690/700	63	115	770	14	OptiFuse FR-S30-690V-63A-D11	345719
	S30	690/700	80	185	1250	18	OptiFuse FR-S30-690V-80A-D11	345720
	S30	690/700	100	360	2450	21	OptiFuse FR-S30-690V-100A-D11	345721
	S30	690/700	125	550	3700	26	OptiFuse FR-S30-690V-125A-D11	345722
	S30	690/700	160	1100	7500	30	OptiFuse FR-S30-690V-160A-D11	345723
	S30	690/700	200	2200	15000	35	OptiFuse FR-S30-690V-200A-D11	345724
	S30	690/700	250	4200	28500	40	OptiFuse FR-S30-690V-250A-D11	345725
	S30	690/700	315	7000	46500	50	OptiFuse FR-S30-690V-315A-D11	345726
	S30	690/700	350	10000	68500	55	OptiFuse FR-S30-690V-350A-D11	345727
	S30	690/700	400	15000	105000	60	OptiFuse FR-S30-690V-400A-D11	345728
	S30	690/700	450	21000	140000	65	OptiFuse FR-S30-690V-450A-D11	345729
	S30	690/700	500	27000	180000	70	OptiFuse FR-S30-690V-500A-D11	345730
	S30	690/700	550	34000	230000	75	OptiFuse FR-S30-690V-550A-D11	345731
	S30	690/700	630	48500	325000	80	OptiFuse FR-S30-690V-630A-D11	345732
	S31	690/700	200	1650	11500	45	OptiFuse FR-S31-690V-200A-D11	345759
	S31	690/700	250	3100	21000	55	OptiFuse FR-S31-690V-250A-D11	345760
	S31	690/700	315	6200	42000	58	OptiFuse FR-S31-690V-315A-D11	345761
	S31	690/700	350	8500	59000	60	OptiFuse FR-S31-690V-350A-D11	345762
	S31	690/700	400	13500	91500	65	OptiFuse FR-S31-690V-400A-D11	345763
	S31	690/700	450	17000	120000	70	OptiFuse FR-S31-690V-450A-D11	345764
	S31	690/700	500	25000	170000	72	OptiFuse FR-S31-690V-500A-D11	345765
	S31	690/700	550	34000	230000	75	OptiFuse FR-S31-690V-550A-D11	345766
	S31	690/700	630	52000	350000	80	OptiFuse FR-S31-690V-630A-D11	345767
	S31	690/700	700	69500	465000	85	OptiFuse FR-S31-690V-700A-D11	345768
	S31	690/700	800	105000	725000	95	OptiFuse FR-S31-690V-800A-D11	345769
	S31	550	900	160000	800000	99	OptiFuse FR-S31-550V-900A-D11	345770
	S32	690/700	315	6000	40000	55	OptiFuse FR-S32-690V-315A-D11	345787
	S32	690/700	350	8000	55000	60	OptiFuse FR-S32-690V-350A-D11	345788
	S32	690/700	400	11000	74000	65	OptiFuse FR-S32-690V-400A-D11	345789
	S32	690/700	450	15500	105000	70	OptiFuse FR-S32-690V-450A-D11	345790
	S32	690/700	500	21500	145000	75	OptiFuse FR-S32-690V-500A-D11	345791
	S32	690/700	550	28000	190000	80	OptiFuse FR-S32-690V-550A-D11	345792
	S32	690/700	630	41000	275000	90	OptiFuse FR-S32-690V-630A-D11	345793
	S32	690/700	700	60500	405000	95	OptiFuse FR-S32-690V-700A-D11	345794
	S32	690/700	800	86000	575000	105	OptiFuse FR-S32-690V-800A-D11	345795
	S32	690/700	900	125000	840000	110	OptiFuse FR-S32-690V-900A-D11	345796
	S32	690/700	1000	180000	1250000	115	OptiFuse FR-S32-690V-1000A-D11	345797
	S32	600	1100	245000	1600000	120	OptiFuse FR-S32-600V-1100A-D11	345798
	S32	550	1250	365000	2400000	130	OptiFuse FR-S32-550V-1250A-D11	345799
	S33	690/700	450	13500	85000	70	OptiFuse FR-S33-690V-450A-D11	345832
	S33	690/700	500	14000	95000	95	OptiFuse FR-S33-690V-500A-D11	345833
	S33	690/700	550	19500	135000	100	OptiFuse FR-S33-690V-550A-D11	345834
	S33	690/700	630	31000	210000	105	OptiFuse FR-S33-690V-630A-D11	345835
	S33	690/700	700	44500	300000	110	OptiFuse FR-S33-690V-700A-D11	345836
	S33	690/700	800	69500	465000	115	OptiFuse FR-S33-690V-800A-D11	345837
	S33	690/700	900	100000	670000	120	OptiFuse FR-S33-690V-900A-D11	345838
	S33	690/700	1000	140000	945000	125	OptiFuse FR-S33-690V-1000A-D11	345839
	S33	690/700	1100	190000	1300000	130	OptiFuse FR-S33-690V-1100A-D11	345840
	S33	690/700	1250	290000	1950000	140	OptiFuse FR-S33-690V-1250A-D11	345841
	S33	690/700	1400	370000	3100000	155	OptiFuse FR-S33-690V-1400A-D11	345842
	S33	600	1500	450000	3500000	158	OptiFuse FR-S33-600V-1500A-D11	345843
	S33	600	1600	580000	3900000	160	OptiFuse FR-S33-600V-1600A-D11	345844
	S33	600	1800	880000	5250000	165	OptiFuse FR-S33-600V-1800A-D11	345845
	S33	550	2000	1150000	6350000	175	OptiFuse FR-S33-550V-2000A-D11	345846

OptiFuse FR S70, S71, S72, S73. TF connection type

Appearance	Dimensions	Rated voltage AC, Un, V	Rated current, A	I²t (A² · c)		Dissipated power, W	Product name	Code
				Melting time, s	Circuit break at Un, A			
	S70	1250	50	130	820	20	OptiFuse FR-S70-1250V-50A-TF	345847
	S70	1250	63	210	310	25	OptiFuse FR-S70-1250V-63A-TF	345848
	S70	1250	80	450	2750	30	OptiFuse FR-S70-1250V-80A-TF	345849
	S70	1250	100	860	5100	35	OptiFuse FR-S70-1250V-100A-TF	345850
	S70	1250	125	1430	8560	40	OptiFuse FR-S70-1250V-125A-TF	345851
	S70	1250	160	2820	17450	45	OptiFuse FR-S70-1250V-160A-TF	345852
	S70	1250	200	4930	29400	48	OptiFuse FR-S70-1250V-200A-TF	345853
	S70	1250	250	9510	56800	50	OptiFuse FR-S70-1250V-250A-TF	345854
	S70	1250	280	14000	75000	55	OptiFuse FR-S70-1250V-280A-TF	345855
	S70	1250	315	21440	130000	60	OptiFuse FR-S70-1250V-315A-TF	345856
	S70	1250	350	28900	174500	65	OptiFuse FR-S70-1250V-350A-TF	345857
	S70	1250	400	42000	249600	70	OptiFuse FR-S70-1250V-400A-TF	345858
	S70	1100	450	45000	264500	80	OptiFuse FR-S70-1100V-450A-TF	345859
	S70	1000	500	60000	330000	85	OptiFuse FR-S70-1000V-500A-TF	345860
	S71	1250	160	2200	13600	40	OptiFuse FR-S71-1250V-160A-TF	345861
	S71	1250	200	4150	24000	45	OptiFuse FR-S71-1250V-200A-TF	345862
	S71	1250	250	7750	46000	52	OptiFuse FR-S71-1250V-250A-TF	345863
	S71	1250	280	11000	67000	56	OptiFuse FR-S71-1250V-280A-TF	345864
	S71	1250	315	16500	98400	60	OptiFuse FR-S71-1250V-315A-TF	345865
	S71	1250	350	21500	132000	65	OptiFuse FR-S71-1250V-350A-TF	345866
	S71	1250	400	31000	185000	70	OptiFuse FR-S71-1250V-400A-TF	345867
	S71	1250	450	44500	265000	80	OptiFuse FR-S71-1250V-450A-TF	345868
	S71	1250	500	63000	375000	85	OptiFuse FR-S71-1250V-500A-TF	345869
	S71	1250	550	84500	500000	90	OptiFuse FR-S71-1250V-550A-TF	345870
	S71	1250	630	126000	755000	98	OptiFuse FR-S71-1250V-630A-TF	345871
	S71	1000	700	140000	800000	115	OptiFuse FR-S71-1000V-700A-TF	345872
	S71	900	800	210000	1300000	125	OptiFuse FR-S71-900V-800A-TF	345873
	S71	800	900	260000	1700000	145	OptiFuse FR-S71-800V-900A-TF	345874
	S71	750	1000	370000	2100000	150	OptiFuse FR-S71-750V-1000A-TF	345875
	S72	1250	250	6750	40000	65	OptiFuse FR-S72-1250V-250A-TF	345887
	S72	1250	315	13500	81500	75	OptiFuse FR-S72-1250V-315A-TF	345888
	S72	1250	350	16500	99000	80	OptiFuse FR-S72-1250V-350A-TF	345889
	S72	1250	400	26000	155000	85	OptiFuse FR-S72-1250V-400A-TF	345890
	S72	1250	450	35500	210000	90	OptiFuse FR-S72-1250V-450A-TF	345891
	S72	1250	500	49500	295000	95	OptiFuse FR-S72-1250V-500A-TF	345892
	S72	1250	550	66000	390000	100	OptiFuse FR-S72-1250V-550A-TF	345893
	S72	1250	630	93500	555000	110	OptiFuse FR-S72-1250V-630A-TF	345894
	S72	1100	700	130000	770000	115	OptiFuse FR-S72-1100V-700A-TF	345895
	S72	1100	800	195000	1200000	125	OptiFuse FR-S72-1100V-800A-TF	345896
	S72	1000	900	250000	1500000	145	OptiFuse FR-S72-1000V-900A-TF	345897
	S72	850	1000	340000	2050000	150	OptiFuse FR-S72-850V-1000A-TF	345898
	S73	1250	315	9200	54500	90	OptiFuse FR-S73-1250V-315A-TF	345912
	S73	1250	350	13000	77500	95	OptiFuse FR-S73-1250V-350A-TF	345913
	S73	1250	400	19000	115000	105	OptiFuse FR-S73-1250V-400A-TF	345914
	S73	1250	450	27000	160000	107	OptiFuse FR-S73-1250V-450A-TF	345915
	S73	1250	500	37500	225000	110	OptiFuse FR-S73-1250V-500A-TF	345916
	S73	1250	550	52000	310000	115	OptiFuse FR-S73-1250V-550A-TF	345917
	S73	1250	630	82500	490000	120	OptiFuse FR-S73-1250V-630A-TF	345918
	S73	1250	700	115000	700000	125	OptiFuse FR-S73-1250V-700A-TF	345919
	S73	1250	800	170000	1050000	135	OptiFuse FR-S73-1250V-800A-TF	345920
	S73	1250	900	250000	1500000	145	OptiFuse FR-S73-1250V-900A-TF	345921
	S73	1000	1000	340000	2050000	150	OptiFuse FR-S73-1000V-1000A-TF	345922
	S73	950	1100	460000	2750000	155	OptiFuse FR-S73-950V-1100A-TF	345923
	S73	950	1250	575000	3400000	175	OptiFuse FR-S73-950V-1250A-TF	345924
	S73	850	1400	795000	4200000	185	OptiFuse FR-S73-850V-1400A-TF	345925

OptiFuse FR S70, S71, S72, S73. D11 connection type

Appearance	Dimensions	Rated voltage AC, Un, V	Rated current, A	I²t (A² · c)		Dissipated power, W	Product name	Code
				Melting time, s	Circuit break at Un, A			
	S70	1250	50	130	820	20	OptiFuse FR-S70-1250V-50A-D11	347689
	S70	1250	63	210	310	25	OptiFuse FR-S70-1250V-63A-D11	347690
	S70	1250	80	450	2750	30	OptiFuse FR-S70-1250V-80A-D11	347691
	S70	1250	100	860	5100	35	OptiFuse FR-S70-1250V-100A-D11	347692
	S70	1250	125	1430	8560	40	OptiFuse FR-S70-1250V-125A-D11	347693
	S70	1250	160	2820	17450	45	OptiFuse FR-S70-1250V-160A-D11	347694
	S70	1250	200	4930	29400	48	OptiFuse FR-S70-1250V-200A-D11	347695
	S70	1250	250	9510	56800	50	OptiFuse FR-S70-1250V-250A-D11	347696
	S70	1250	280	14000	75000	55	OptiFuse FR-S70-1250V-280A-D11	347697
	S70	1250	315	21440	130000	60	OptiFuse FR-S70-1250V-315A-D11	347698
	S70	1250	350	28900	174500	65	OptiFuse FR-S70-1250V-350A-D11	347699
	S70	1250	400	42000	249600	70	OptiFuse FR-S70-1250V-400A-D11	347700
	S71	1250	160	2200	13600	40	OptiFuse FR-S71-1250V-160A-D11	345876
	S71	1250	200	4150	24000	45	OptiFuse FR-S71-1250V-200A-D11	345877
	S71	1250	250	7750	46000	52	OptiFuse FR-S71-1250V-250A-D11	345878
	S71	1250	280	11000	67000	56	OptiFuse FR-S71-1250V-280A-D11	345879
	S71	1250	315	16500	98400	60	OptiFuse FR-S71-1250V-315A-D11	345880
	S71	1250	350	21500	132000	65	OptiFuse FR-S71-1250V-350A-D11	345881
	S71	1250	400	31000	185000	70	OptiFuse FR-S71-1250V-400A-D11	345882
	S71	1250	450	44500	265000	80	OptiFuse FR-S71-1250V-450A-D11	345883
	S71	1250	500	63000	375000	85	OptiFuse FR-S71-1250V-500A-D11	345884
	S71	1250	550	84500	500000	90	OptiFuse FR-S71-1250V-550A-D11	345885
	S71	1100	630	126000	755000	98	OptiFuse FR-S71-1100V-630A-D11	345886
	S72	1250	250	6750	40000	65	OptiFuse FR-S72-1250V-250A-D11	345899
	S72	1250	280	9000	65000	70	OptiFuse FR-S72-1250V-280A-D11	345900
	S72	1250	315	13500	81500	75	OptiFuse FR-S72-1250V-315A-D11	345901
	S72	1250	350	16500	99000	80	OptiFuse FR-S72-1250V-350A-D11	345902
	S72	1250	400	26000	155000	85	OptiFuse FR-S72-1250V-400A-D11	345903
	S72	1250	450	35500	210000	90	OptiFuse FR-S72-1250V-450A-D11	345904
	S72	1250	500	49500	295000	95	OptiFuse FR-S72-1250V-500A-D11	345905
	S72	1250	550	66000	390000	100	OptiFuse FR-S72-1250V-550A-D11	345906
	S72	1250	630	93500	555000	110	OptiFuse FR-S72-1250V-630A-D11	345907
	S72	1250	700	130000	770000	115	OptiFuse FR-S72-1250V-700A-D11	345908
	S72	1250	800	195000	1200000	125	OptiFuse FR-S72-1250V-800A-D11	345909
	S72	1100	900	250000	1500000	145	OptiFuse FR-S72-1100V-900A-D11	345910
	S72	1100	1000	340000	2050000	150	OptiFuse FR-S72-1100V-1000A-D11	345911
	S73	1250	315	9200	54500	90	OptiFuse FR-S73-1250V-315A-D11	345926
	S73	1250	350	13000	77500	95	OptiFuse FR-S73-1250V-350A-D11	345927
	S73	1250	400	19000	115000	105	OptiFuse FR-S73-1250V-400A-D11	345928
	S73	1250	450	27000	160000	107	OptiFuse FR-S73-1250V-450A-D11	345929
	S73	1250	500	37500	225000	110	OptiFuse FR-S73-1250V-500A-D11	345930
	S73	1250	550	52000	310000	115	OptiFuse FR-S73-1250V-550A-D11	345931
	S73	1250	630	82500	490000	120	OptiFuse FR-S73-1250V-630A-D11	345932
	S73	1250	700	115000	700000	125	OptiFuse FR-S73-1250V-700A-D11	345933
	S73	1250	800	170000	1050000	135	OptiFuse FR-S73-1250V-800A-D11	345934
	S73	1250	900	250000	1500000	145	OptiFuse FR-S73-1250V-900A-D11	345935
	S73	1250	1000	340000	2050000	150	OptiFuse FR-S73-1250V-1000A-D11	345936
	S73	1250	1100	460000	2750000	155	OptiFuse FR-S73-1250V-1100A-D11	345937
	S73	1100	1250	575000	3400000	175	OptiFuse FR-S73-1100V-1250A-D11	345938
	S73	1100	1400	795000	4200000	185	OptiFuse FR-S73-1100V-1400A-D11	345939

Appearance	Dimensions	Rated voltage AC, Un, V	Rated current, A	I²t (A² · c)		Dissipated power, W	Product name	Code
				Melting time, s	Circuit break at Un, A			
OptiFuse FR S44. TF connection type								
	S44	690/700	1000	76000	505000	175	OptiFuse FR-S44-690V-1000A-TF	347680
	S44	690/700	1250	145000	965000	195	OptiFuse FR-S44-690V-1250A-TF	347681
	S44	690/700	1400	205000	1400000	205	OptiFuse FR-S44-690V-1400A-TF	347682
	S44	690/700	1600	305000	2050000	220	OptiFuse FR-S44-690V-1600A-TF	347683
	S44	690/700	2000	600000	3950000	245	OptiFuse FR-S44-690V-2000A-TF	347684
	S44	690/700	2500	1200000	7800000	275	OptiFuse FR-S44-690V-2500A-TF	347685
	S44	690/700	3000	2000000	13500000	305	OptiFuse FR-S44-690V-3000A-TF	347686
	S44	690/700	3500	3250000	22000000	325	OptiFuse FR-S44-690V-3500A-TF	347687
	S44	600	4000	4700000	28000000	355	OptiFuse FR-S44-600V-4000A-TF	347688
OptiFuse FR S84. TF connection type								
	S84	1250	1000	180000	1100000	195	OptiFuse FR-S84-1250V-1000A-TF	347701
	S84	1250	1100	250000	1500000	200	OptiFuse FR-S84-1250V-1100A-TF	347702
	S84	1250	1500	600000	3600000	250	OptiFuse FR-S84-1250V-1500A-TF	347703
	S84	1250	1700	850000	5000000	260	OptiFuse FR-S84-1250V-1700A-TF	347704
	S84	1250	1800	1000000	5950000	265	OptiFuse FR-S84-1250V-1800A-TF	347705
	S84	1250	2000	1450000	8600000	270	OptiFuse FR-S84-1250V-2000A-TF	347706
	S84	1250	2200	2000000	12000000	280	OptiFuse FR-S84-1250V-2200A-TF	347707
	S84	1250	2500	3000000	18000000	295	OptiFuse FR-S84-1250V-2500A-TF	347708

Technical specification

Parameter	Value
Rated voltage Un (AC), V	450 – 1250
Rated current In, A	40 – 4000
Limiting switching capacity, kA	100
Fuse application category	aR
Connection type	TF — countersunk contact caps; D08, D11 — contact knives
Standard compliance	TP TC 004/2011, GOST IEC 60269-1-2016, GOST IEC 60269-4-2016
Group of operating conditions (GOST 30631-99)	M39, M25
IP rating	IP00
Climatic version	UHL3
Operating temperature range, °C	-40 to +90

Accessories

OptiFuse FR free contacts

Appearance	Rated voltage AC, Un, V	Rated current, A	Product name	Code
	250	5	OptiFuse FR-FRX26	357515
	250	5	OptiFuse FR-FRX6	357516

Fuse series	Auxiliary contact name
OptiFuse FR-S30 OptiFuse FR-S31 OptiFuse FR-S32 OptiFuse FR-S33 OptiFuse FR-S44	FRX6 250V
OptiFuse FR-S70 OptiFuse FR-S71 OptiFuse FR-S72 OptiFuse FR-S73 OptiFuse FR-S84 OptiFuse FR-S94 OptiFuse FR-S273	FRX26 250V / FRX6 250V

Overall dimensions (mm)

OptiFuse FR S30, S31, S32, S33. TF connection type

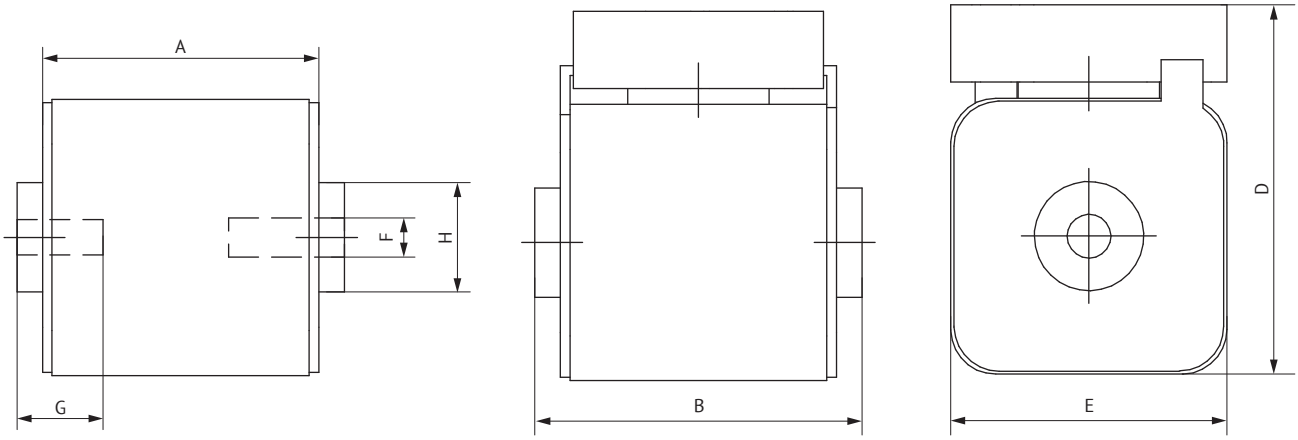

Dimensions	Size						
	A (Max)	B	D	E	F	G	H
S30	50	51	43 (59)	43	M8	5	17
S31	50	51	50 (69)	50	M8	8	20
	50	51	50 (69)	50	M8	8	20
S32	50	51	60 (77)	60	M10	10	24
	50	65	60 (77)	60	M10	10	24
S33	50	51	75 (92)	75	M12	12	40
	50	65	75 (92)	75	M12	12	40
	50	65	75 (92)	75	M12	12	40
	50	65	75 (92)	75	M12	12	40
	50	65	75 (92)	75	M12	12	40

OptiFuse FR S30, S31, S32, S33. D08 and D11 connection type

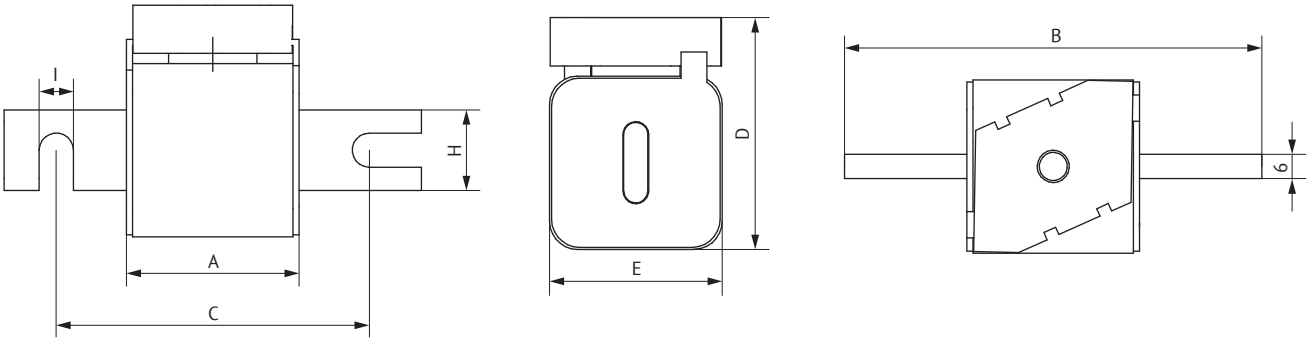

Dimension	Size						
	A (Max)	B	C	D	E	H	I
S30-D08/S30-D11	50	104/134	78/104	59	43	20	8
S31-D08/S31-D11	50	108/138	78/108	69	51	25	11
S32-D08/S32-D11	50	108/138	78/108	77	60	25	11
S33-D08/S33-D11	50	108/138	78/108	92	75	30	11

OptiFuse FR S70, S71, S72, S73. TF connection type

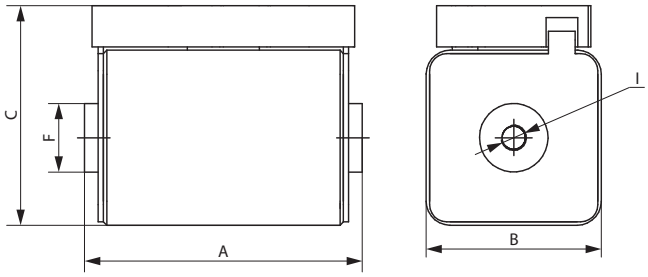

Dimension	Size				
	A	B	C	F	I
S70	81±2	43±2	61±3	17±1	M8x10
S71	81±2	51±2	67±3	20±1	M8x10
S72	81±2	60±2	76±3	24±1	M10x12
S73	81±2/91±2 (1250A - 1600A)	75±2	92±3	40±1	M12x10

OptiFuse FR S70, S71, S72, S73. D11 connection type

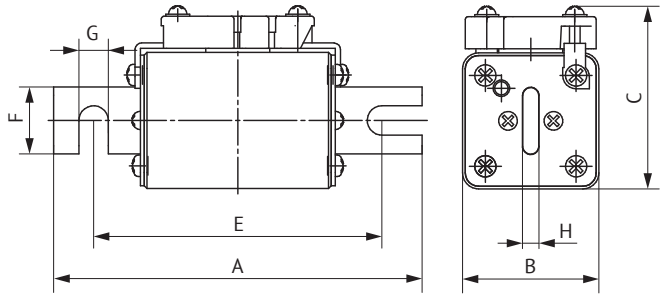

Dimension	Size						
	A	B	C	E	F	G	H
S70	134±2	43±2	61±3	108±2,5	17±1	8	6
S71	138±2	51±2	67±3	108±2,5	20±1	11	6
S72	138±2	60±2	76±3	108±2,5	24±1	11	6
S73	166±2	75±2	92±3	108±2,5	40±1	11	6

OptiFuse FR-S44

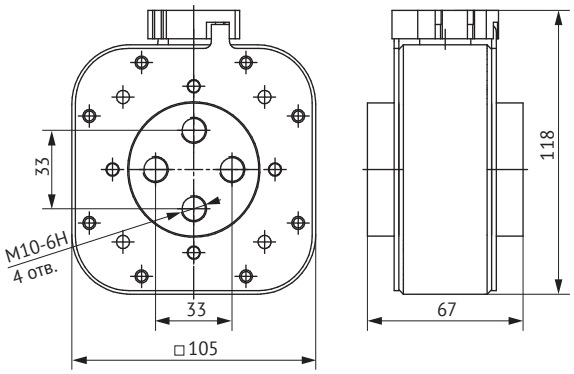

OptiFuse FR S84. TF connection type

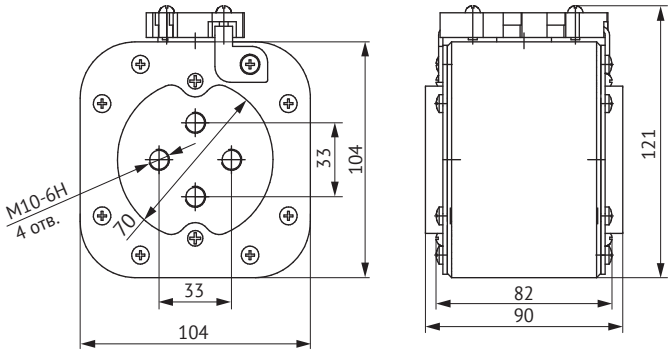

OptiFuse FR FRX6 and FRX26

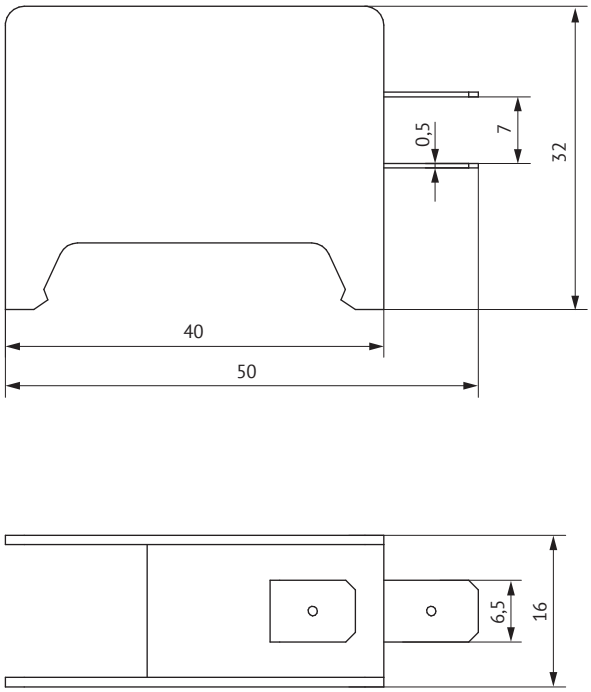

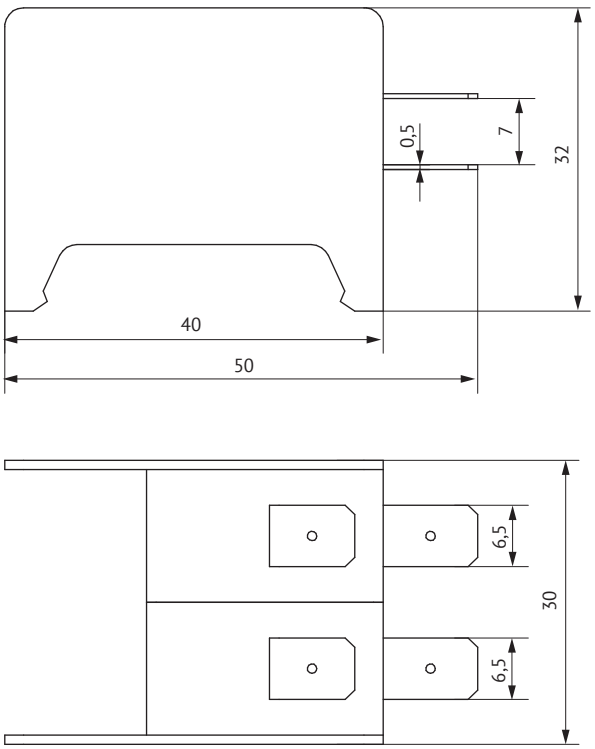

Current and time characteristics

CTC of both full disconnection and fusing for S30 size

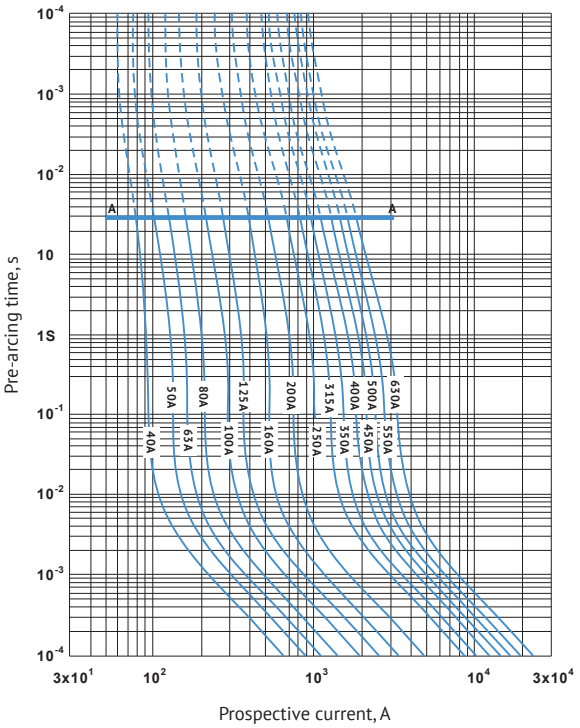

CTC of both full disconnection and fusing for S31 size

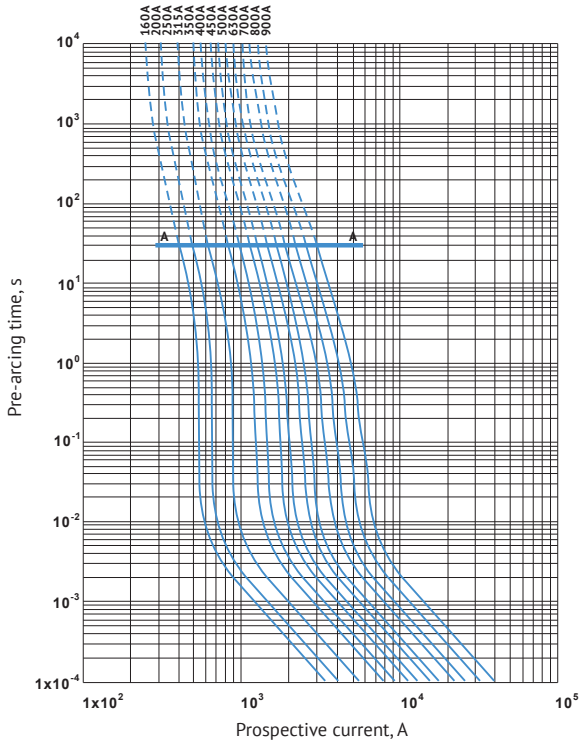

Cutoff current amplitudes versus prospective SC current for S30 size

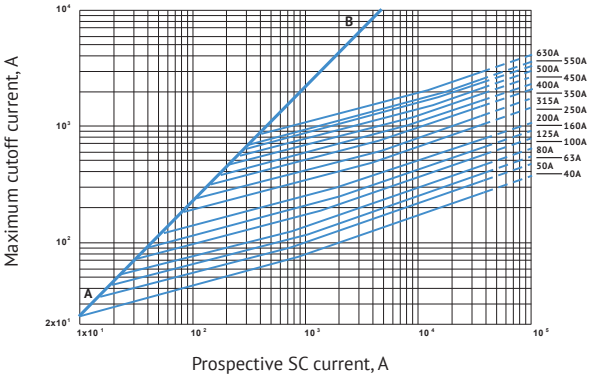

Cutoff current amplitudes versus prospective SC current for S31 size

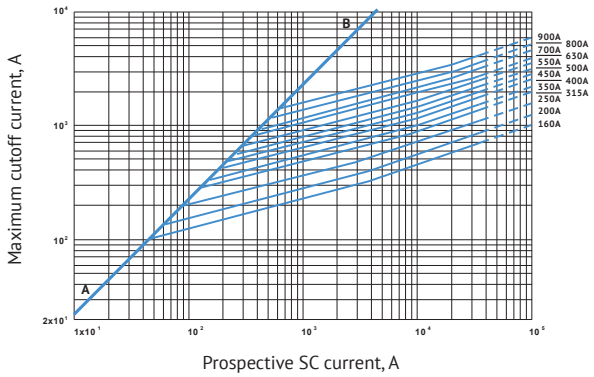

CTC of both full disconnection and fusing for S32 size

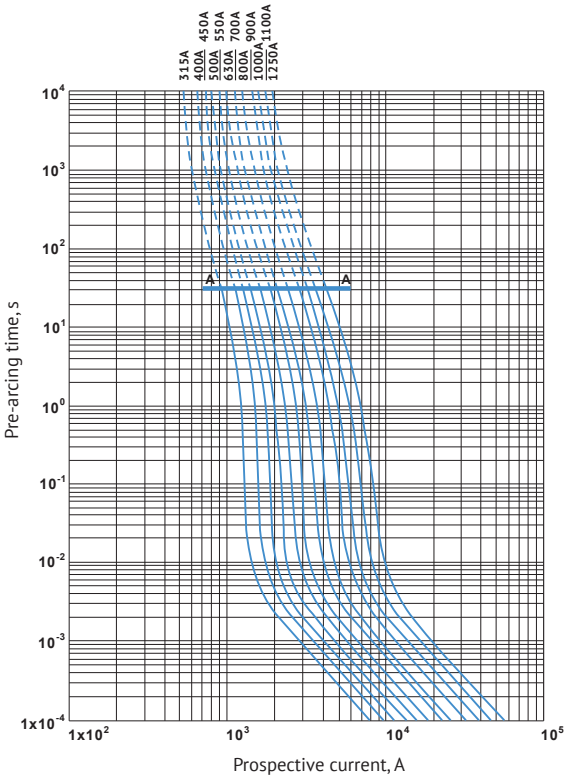

CTC of both full disconnection and fusing for S33 size

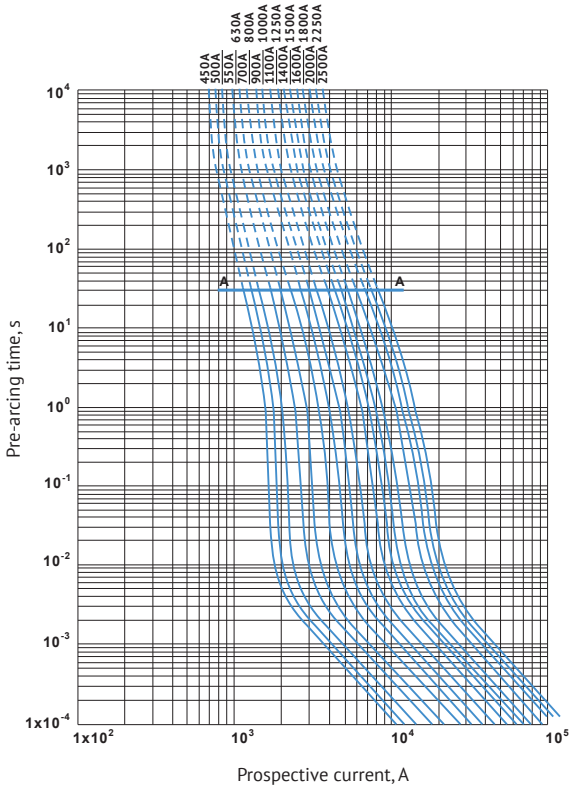

Cutoff current amplitudes versus prospective SC current for S32 size

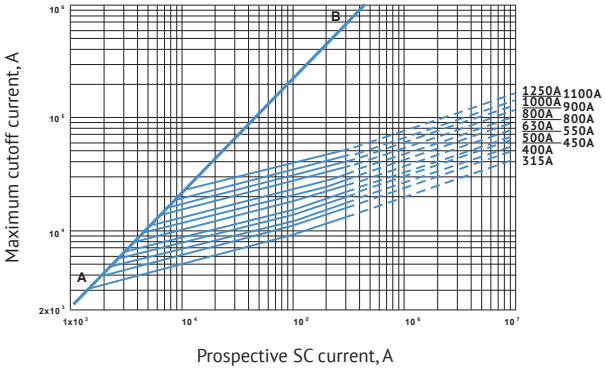

Cutoff current amplitudes versus prospective SC current for S33 size

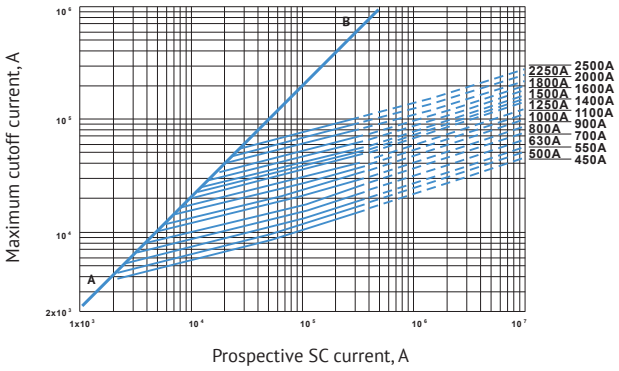

CTC of both full disconnection and fusing for S70 size

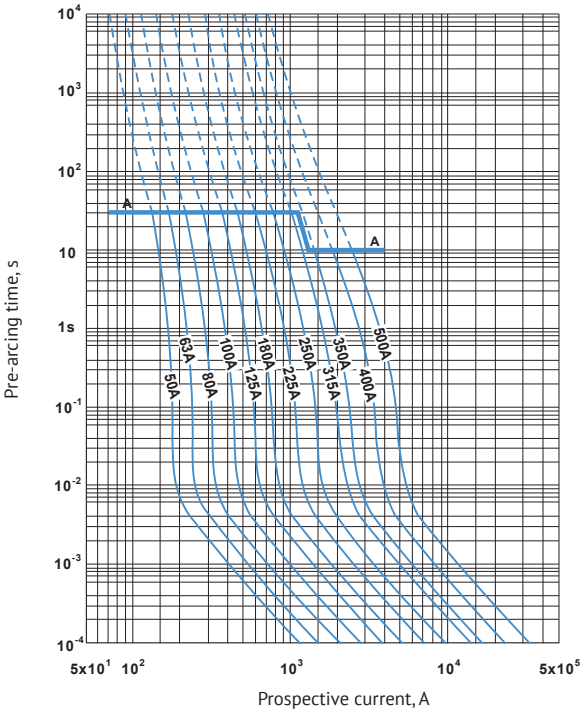

CTC of both full disconnection and fusing for S71 size

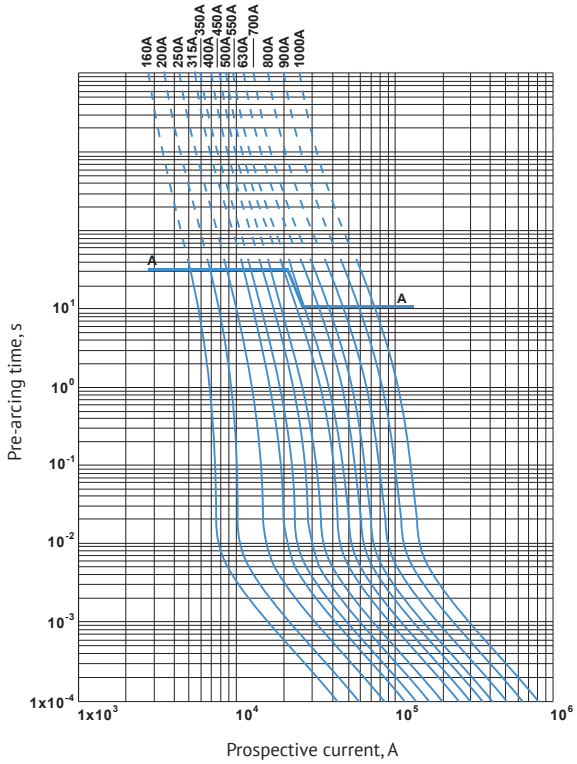

Cutoff current amplitudes versus prospective SC current for S70 size

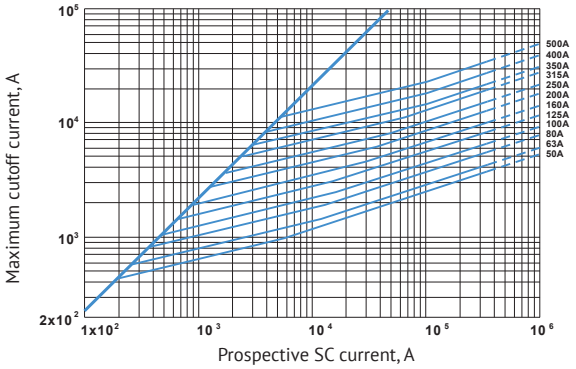

Cutoff current amplitudes versus prospective SC current for S71 size

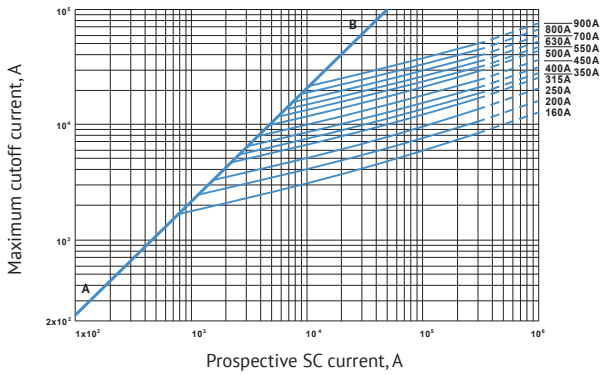

CTC of both full disconnection and fusing for S72 size

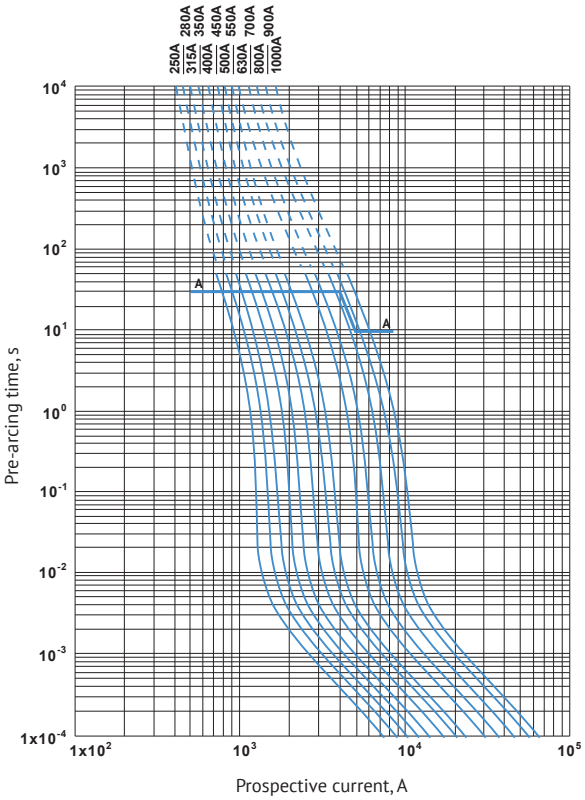

CTC of both full disconnection and fusing for S73 size

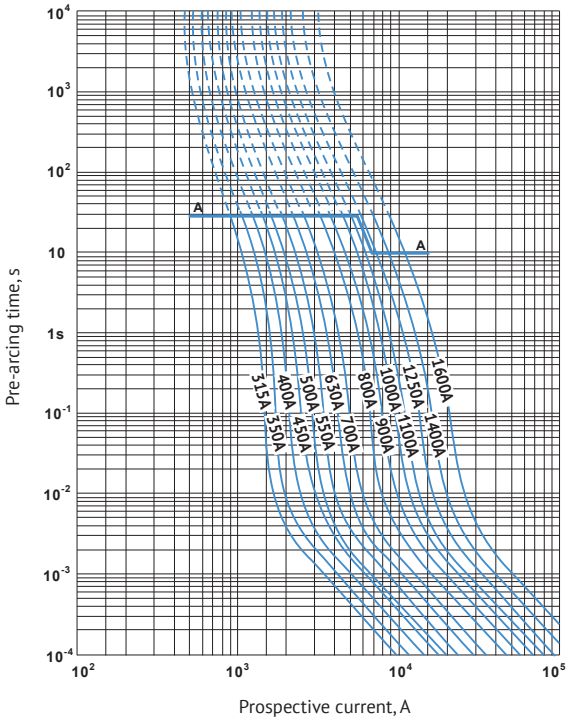

Cutoff current amplitudes versus prospective SC current for S72 size

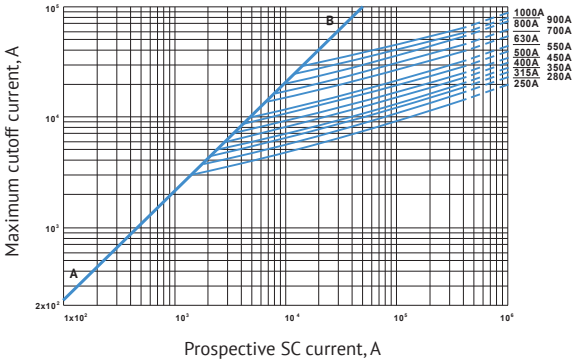

Cutoff current amplitudes versus prospective SC current for S73 size

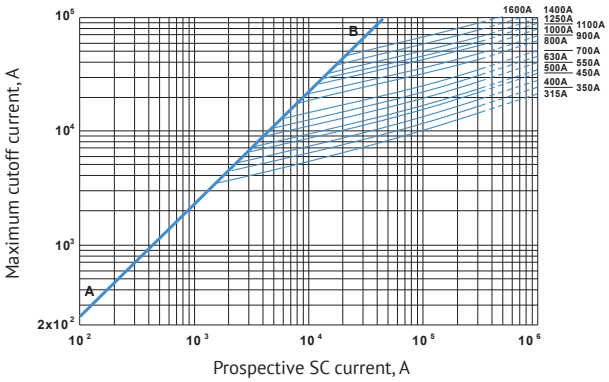

CTC of both full disconnection and fusing for S44 size

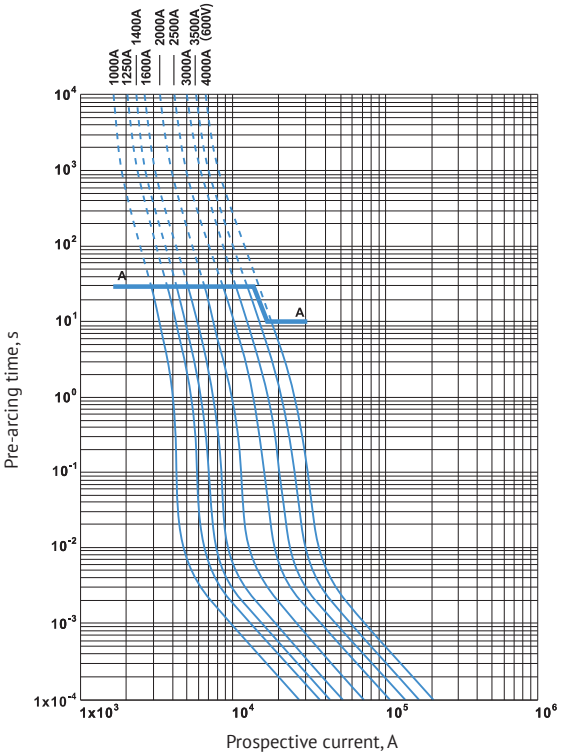

CTC of both full disconnection and fusing for S84 size

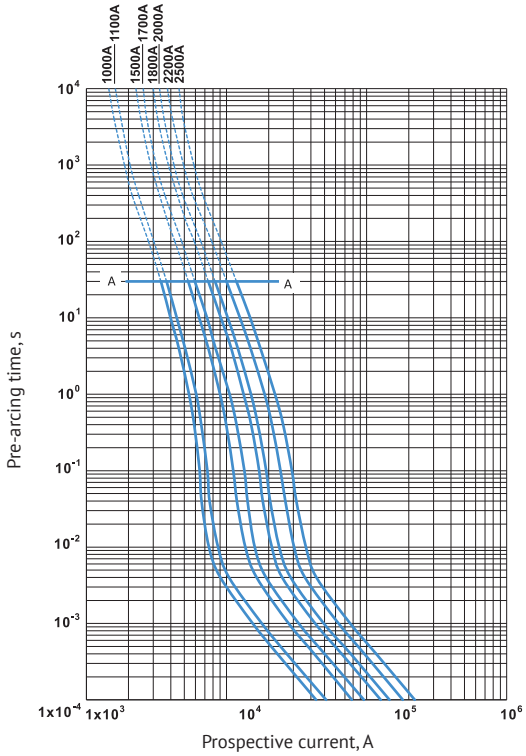

Cutoff current amplitudes versus prospective SC current for S44 size

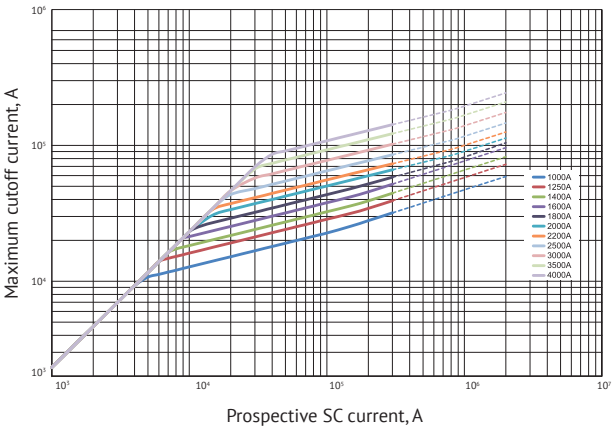

Cutoff current amplitudes versus prospective SC current for S44 size

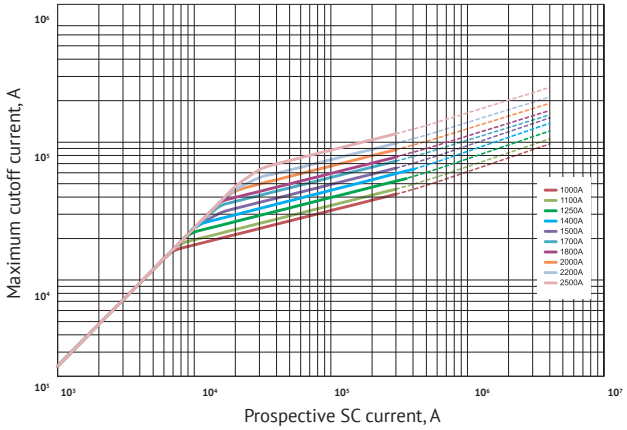

OptiStart
Start-control devices

OptiStart MP Motor protection circuit breakers 347

OptiStart K Electromagnetic contactors up to 1600 A 364

OptiStart TF Overload relays up to 420 A 461

OptiStart E LC1E Electromagnetic contactors up to 630 A 473

OptiStart E LRE Thermal relays up to 93 A 485

OptiStart electric motor control and protection devices represent reliable high-quality equipment for technically complex solutions, strategic industries, as well as for automation and load management.

OptiStart MP Motor protection circuit breakers

347

OptiStart MP-32RH

Ie (400 V):
0,1 to 40 A
Icu (400 V):
up to 100 kA
Operating temperature up to +60 °C

OptiStart MP-32RHI

Ie (400 V):
0,1 to 40 A
Icu (400 V):
up to 100 kA
Magnetic release only

OptiStart MP-63R

Ie (400 V):
32 to 63 A
Icu (400 V):
up to 50 kA
Operating temperature up to +60 °C

OptiStart MP-100R

Ie (400 V):
55 to 100 A
Icu (400 V):
up to 50 kA
Operating temperature up to +60 °C

Three-pole contactors

364

OptiStart K-F

Ith (A):
16 to 1600
Ie (AC-3 440 V):
6 to 630 A
Prated (AC-3 440 V):
2.2 to 335 kW
AC, DC or AC/DC coil

OptiStart K-AF

Ith (A):
70 to 350
Ie (AC-3 440 V):
40 to 230 A
Prated (AC-3 440 V):
18.5 to 110 kW
Electronically controlled AC/DC coil

Four-pole contactors

364

OptiStart K-AF

Ith (A):
70 to 350
Ie (AC-3 440 V):
40 to 230 A
Prated (AC-3 440 V):
18.5 to 110 kW
Electronically-controlled AC/DC coil

OptiStart K-F

Ith (A):
16 to 1600
Ie (AC-3 440 V):
6 to 630 A
Prated (AC-3 440 V):
2.2 to 335 kW
AC, DC or AC/DC coil

Capacitor contactors

OptiStart K-FK

364

Completed with current-limiting resistors
Qrated (400 V):
7.5 to 100 kVAr
AC control coil

Contactors for DC switching

OptiStart K-FD

364

With permanent magnet installed for arc control
Ie (DC1, 600 V at ≤55 °C):
up to 350 A
AC control coil or electronically-controlled AC/DC coil

Contactor relays

OptiStart K-FR

364

For switching and galvanic isolation of low-current circuits and control circuits
Up to 11 contacts with various NO and NC combinations. AC or DC control coil

Mini-contactors

OptiStart K-M

444

Ith (A): 16 to 20
Ie (AC-3 440 V): 6 to 12 A
Prated (AC-3 440 V):
2,5 kPa to 5.5 kW
AC or DC coil

Overload relay

OptiStart TF

461

Thermal overload relays
0.1 to 100 A
Trip class: 10 A
Electr. overload relays 0.4 to 45 A
Trip type 5E-10E-20E-30E adjustable

OptiStart MP

↗ Motor protection circuit breakers

OptiStart MP electric motor protection circuit breakers are designed to protect electric motors against short circuit, overload and two-phase operation modes, and are also used to start and stop them. The series range is represented by models designed for up to 100 A (45 kW at 400 V) with a breaking capacity of up to 100 kA to allow the use of equipment to protect industrial installations with high short-circuit currents.

OptiStart MP motor protection circuit breakers have a wide range of operating temperatures and a built-in temperature compensation function to ensure the guaranteed disconnection according to the time-current characteristic without operating temperature correction. They can be used to protect both three-phase and single-phase electric motors.

The range of accessories is represented by auxiliary contacts, signal contacts, minimum voltage releases, remote releases, comb busbars, as well as extended handles and mounting accessories.

Designation

OptiStart MP - 32 R H I - 10 - T2

(1) (2) (3) (4) (5) (6) (7) (8)

1	Series	OptiStart — Motor control and protection equipment		
2	Configuration	MP — Motor protection circuit breakers		
3	Standard size	32	63	100
4	Designation of control knob type	R — rotating type		
5	Designation of closure and breaking capacity	H — enhanced	no letter – normal	
6	Model designation with electromagnetic release only (without overload protection)	I — no thermal release	-	
7	Maximum current of thermal release setpoint range, A	0,16 to 100		
8	Designation of circuit breaker version	T2		

Series advantages

The series range is represented by models designed for up to 100 A (100 kW at 400 V) with a breaking capacity of up to 100 kA to allow the use of equipment to protect industrial installations with high short-circuit currents.

All devices have visible tripping indication in case of emergency, and OptiStart MP-32RH..-T2 models are equipped with a special electromagnetic release trip indicator to facilitate searching for the tripping cause and troubleshooting.

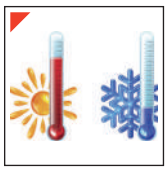

A wide operating temperature range from -20 to +60 °C, as well as a built-in temperature compensation function ensure both stable operation without false tripping and guaranteed disconnection according to the time-current characteristic without operating temperature adjustment.

Connection modules used enable direct connection of circuit breakers to OptiStart K contactors without the use of auxiliary conductors, which simplifies installation and ensures an ergonomic solution.

The circuit breakers are compatible and tested with motor control devices, i.e. OptiStart contactors, which enables implementing proven solutions for starting electric motors with type 1 or 2 coordination.

All models can be equipped with a wide range of accessories, such as auxiliary and signal contacts, independent releases, comb busbars, mounting components and extended handles to enable implementation of solutions meeting the customer requirements.

Items

Motor protection circuit breakers with overload and short-circuit protection

Appearance	Motor rated power (400 V), kW [1]	Rated current setpoint range, A [2]	Electromagnetic release setpoint, A [3]	Breaking capacity Icu at 400 V AC, kA	Code	Product name	Weight, kg
	0,03	0,1–0,16	1,6	100	340132	OptiStart MP-32RH-0,16-T2	0,28
	0,06	0,16–0,25	2,5	100	340133	OptiStart MP-32RH-0,25-T2	0,28
	0,09	0,25–0,4	5,2	100	340134	OptiStart MP-32RH-0,4-T2	0,28
	0,18	0,4–0,63	8,2	100	340135	OptiStart MP-32RH-0,63-T2	0,28
	0,25	0,63–1	13	100	340136	OptiStart MP-32RH-1-T2	0,28
	0,55	1–1,6	20,8	100	340137	OptiStart MP-32RH-1,6-T2	0,28
	0,75	1,6–2,5	32,5	100	340141	OptiStart MP-32RH-2,5-T2	0,28
	1,5	2,5–4	52	100	340145	OptiStart MP-32RH-4-T2	0,34
	3	4–6,5	84,5	100	340146	OptiStart MP-32RH-6,5-T2	0,34
	4	6,3–10	130	100	340138	OptiStart MP-32RH-10-T2	0,34
	5,5	9–14	182	100	340139	OptiStart MP-32RH-14-T2	0,34
	7,5	13–18	234	100	340140	OptiStart MP-32RH-18-T2	0,34
	11	17–23	299	50	340142	OptiStart MP-32RH-23-T2	0,34
	11	20–25	325	50	340143	OptiStart MP-32RH-25-T2	0,34
	15	24–32	416	50	340144	OptiStart MP-32RH-32-T2	0,34
	18,5	30–40	520	20	357845	OptiStart MP-32RH-40-T2	0,34
	22	34–50	650	50	348546	OptiStart MP-63R-50-T2	1
	30	45–63	819	50	348544	OptiStart MP-63R-63-T2	1
	37	55–75	975	50	348547	OptiStart MP-100R-75-T2	2,2
	45	70–90	1170	50	348537	OptiStart MP-100R-90-T2	2,2
	55	80–100	1300	50	348538	OptiStart MP-100R-100-T2	2,2

Motor protection circuit breakers with short-circuit protection only

Appearance	Motor rated power (400 V), kW [1]	Rated current, A	Electromagnetic release setpoint, A [3]	Breaking capacity Icu at 400 V AC, kA	Code	Product name	Weight, kg
	0,03	0,16	2,08	100	340147	OptiStart MP-32RHI-0,16-T2	0,28
	0,06	0,25	3,25	100	340148	OptiStart MP-32RHI-0,25-T2	0,28
	0,09	0,4	5,2	100	340149	OptiStart MP-32RHI-0,4-T2	0,28
	0,18	0,63	8,2	100	340150	OptiStart MP-32RHI-0,63-T2	0,28
	0,25	1	13	100	340151	OptiStart MP-32RHI-1-T2	0,28
	0,55	1,6	20,8	100	340152	OptiStart MP-32RHI-1,6-T2	0,28
	0,75	2,5	32,5	100	340156	OptiStart MP-32RHI-2,5-T2	0,28
	1,5	4	52	100	340160	OptiStart MP-32RHI-4-T2	0,34
	3	6,5	84,5	100	340161	OptiStart MP-32RHI-6,5-T2	0,34
	4	10	130	100	340153	OptiStart MP-32RHI-10-T2	0,34
	5,5	14	182	100	340154	OptiStart MP-32RHI-14-T2	0,34
	7,5	18	234	100	340155	OptiStart MP-32RHI-18-T2	0,34
	11	23	299	50	340157	OptiStart MP-32RHI-23-T2	0,34
	11	25	325	50	340158	OptiStart MP-32RHI-25-T2	0,34
	15	32	416	50	340159	OptiStart MP-32RHI-32-T2	0,34
	18,5	40	520	20	357846	OptiStart MP-32RHI-40-T2	0,34

Notes:
[1] The rated motor power values are provided for reference only and may vary depending on the motor manufacturer and number of poles.
[2] Motor protection circuit breakers should be selected so that the actual motor current is within the setpoint range; however, when several circuit breakers are operated simultaneously and installed close to each other, the controller setpoint should be 15% higher than the rated motor current.
[3] The time-current characteristics are provided in the Operation Manual.

Technical specification

Circuit breaker type			MP-32RH, MP-32RHI	MP-63R	MP-100R
Number of poles			3		
Rated current In, max, A			40	63	100
Ambient temperature					
Storage and transportation, °C			-50...+80		
Operation, °C			-20...+60 [1]		
Rated insulation voltage Ui, V			690	1000	
Rated pulse withstand voltage Uimp, kV			6	8	
Rated operating voltage Ue, V			690		
Rated frequency, Hz			50/60		
Overcurrent release operating current setpoint Ii, A			13In ±20 % [2]		
Utilization category	GOST R 50030.2-2010		A		
	GOST IEC 60947-4-1-2021		AC-3		
Overcurrent release trip class as per GOST IEC 60947-4-1-2021 [3]			10A	10	
Ambient temperature compensation			Yes		
Open-phase protection as per GOST IEC 60947-4-1-2021			Yes		
Dissipation power by one breaker pole depending on In, W		0,16-1,6	2,3	–	
		2,5-26	2,8	–	
		32	4,4	–	
		50-63	–	9,7	–
		75-100	–	–	17,8
Protection degree in accordance with GOST 14254-2015			IP20	IP20 from the front side	
Wear resistance, cycles	mechanical		100000	50000	
	switching		100000	25000	
Maximum number of activations per hour in utilization category AC-3			25		
Conductors connection to control circuit					
Conductor cross-section, mm²	multi-core with no terminal		1x1...10	1x1...35	1x2,5...70
	single-core with no terminal		2x1...6	2x1...25	2x2,5...50
	multi-core with terminal		2x1...6	1x1...25 2x1...16	1x2,5...50 2x2,5...35
Stripped insulation length, mm			10	13	17
Screw tightening torque, N·m			0,8...2	3...4,5	4...6
Tool			Отвертка с профилем Philips №2		⬡ 4 мм

[1] When installing several circuit breakers with simultaneous operation next to each other, the regulator setpoint shall be 15% higher than the rated motor current.
[2] Overcurrent release operating current setpoint 10In ±20% for circuit breakers with an overload current release setpoint of 0.1...0.16 A and 0.16...0.25.
[3] Breaking current of overcurrent releases 125 %.

Rated ultimate short-circuit maximum breaking capacity Icu, rated operating short-circuit maximum breaking capacity Ics

Setpoint range, A	Rated current, In, A	230 V		400 V		690 V	
		Icu, kA	Ics, kA	Icu, kA	Ics, kA	Icu, kA	Ics, kA
Breaker type MP-32RH, MP-32RHI							
0,1-0,16	0,16	100	100	100	100	100	100
0,16-0,25	0,25	100	100	100	100	100	100
0,25-0,4	0,4	100	100	100	100	100	100
0,4-0,63	0,63	100	100	100	100	100	100
0,63-1	1	100	100	100	100	100	100
1-1,6	1,6	100	100	100	100	100	100
1,6-2,5	2,5	100	100	100	100	10	10
2,5-4	4	100	100	100	100	10	10
4-6,5	6,5	100	100	100	100	4	2
6,3-10	10	100	100	100	100	4	2
9-14	14	100	100	100	100	4	2
13-18	18	100	100	100	100	4	2
17-23	23	100	100	50	25	4	2
20-25	25	100	100	50	25	4	2
24-32	32	100	100	50	25	4	2
Breaker type MP-63R							
34-50	50	100	100	50	50	5	5
45-63	63	100	100	50	50	5	5
Breaker type MP-100R							
55-75	75	100	100	50	38	5	4
70-90	90	100	100	50	38	5	4
80-100	100	100	100	50	38	5	4

Technical information

OptiStart K series switch and contactor combination for type 1 and 2 coordination

Type 1 coordination. In case of short circuit, the contactor and thermal relay damage is possible, which may render them unsuitable for further operation without repair and parts replacement. However, these devices should not pose a danger to people and equipment, for example, due to starter parts flying out of the enclosure.

Rated voltage: 400 V AC
Conditional short-circuit current: 50 kA

Rated motor power, kW	Rated motor current [1] at 400 V, A	Circuit breaker model	Contactor model	Current adjustment range of thermal release, A
0,06	0,2	OptiStart MP-32RH-0,25-T2	OptiStart K-F-09-...	0,16...0,25
0,09	0,3	OptiStart MP-32RH-0,4-T2	OptiStart K-F-09-...	0,25...0,4
0,12	0,44	OptiStart MP-32RH-0,63-T2	OptiStart K-F-09-...	0,4...0,63
0,18	0,6	OptiStart MP-32RH-0,63-T2	OptiStart K-F-09-...	0,4...0,63
0,25	0,85	OptiStart MP-32RH-1-T2	OptiStart K-F-09-...	0,63...1
0,37	1,1	OptiStart MP-32RH-1,6-T2	OptiStart K-F-09-...	1...1,6
0,55	1,5	OptiStart MP-32RH-1,6-T2	OptiStart K-F-09-...	1...1,6
0,75	1,9	OptiStart MP-32RH-2,5-T2	OptiStart K-F-09-...	1,6...2,5
1,1	2,7	OptiStart MP-32RH-4-T2	OptiStart K-F-09-...	2,5...4
1,5	3,6	OptiStart MP-32RH-4-T2	OptiStart K-F-09-...	2,5...4
2,2	4,9	OptiStart MP-32RH-6,5-T2	OptiStart K-F-09-...	4...6,5
3	6,5	OptiStart MP-32RH-10-T2	OptiStart K-F-09-...	6,3...10
4	8,5	OptiStart MP-32RH-10-T2	OptiStart K-F-09-...	6,3...10
5,5	11,5	OptiStart MP-32RH-14-T2	OptiStart K-F-12-...	9...14
7,5	15,5	OptiStart MP-32RH-18-T2	OptiStart K-F-18-...	13...18
11	22	OptiStart MP-32RH-23-T2	OptiStart K-F-25-...	17...23
15	29	OptiStart MP-32RH-32-T2	OptiStart K-F-32-...	24...32
18,5	35	OptiStart MP-63R-50-T2	OptiStart K-F-38-...	34...50
22	41	OptiStart MP-63R-50-T2	OptiStart K-F-50-...	34...50
30	55	OptiStart MP-63R-63-T2	OptiStart K-F-65-...	45...63
37	66	OptiStart MP-100R-75-T2	OptiStart K-F-80-...	55...75
45	80	OptiStart MP-100R-90-T2	OptiStart K-F-94-...	70...90
55	97	OptiStart MP-100R-100-T2	OptiStart K-F-115-...	80...100

Coordination type 2. In short circuit conditions, welding of contacts is permitted, provided that they are easily disconnected (e.g. by a screwdriver) without noticeable deformation. The contactor and thermal relay should not pose a danger to people and equipment and should remain suitable for further operation after recovery of normal conditions.

Rated voltage: 400 V AC
Conditional short-circuit current: 50 kA

Rated motor power, kW	Rated motor current [1] at 400 V, A	Circuit breaker model	Contactor model	Current adjustment range of thermal release, A
0,06	0,2	OptiStart MP-32RH-0,25-T2	OptiStart K-F-09-...	0,16...0,25
0,09	0,3	OptiStart MP-32RH-0,4-T2	OptiStart K-F-09-...	0,25...0,4
0,12	0,44	OptiStart MP-32RH-0,63-T2	OptiStart K-F-09-...	0,4...0,63
0,18	0,6	OptiStart MP-32RH-0,63-T2	OptiStart K-F-09-...	0,4...0,63
0,25	0,85	OptiStart MP-32RH-1-T2	OptiStart K-F-09-...	0,63...1
0,37	1,1	OptiStart MP-32RH-1,6-T2	OptiStart K-F-09-...	1...1,6
0,55	1,5	OptiStart MP-32RH-1,6-T2	OptiStart K-F-09-...	1...1,6
0,75	1,9	OptiStart MP-32RH-2,5-T2	OptiStart K-F-09-...	1,6...2,5
1,1	2,7	OptiStart MP-32RH-4-T2	OptiStart K-F-09-...	2,5...4
1,5	3,6	OptiStart MP-32RH-4-T2	OptiStart K-F-09-...	2,5...4
2,2	4,9	OptiStart MP-32RH-6,5-T2	OptiStart K-F-09-...	4...6,5
3	6,5	OptiStart MP-32RH-10-T2	OptiStart K-F-09-...	6,3...10
4	8,5	OptiStart MP-32RH-10-T2	OptiStart K-F-09-...	6,3...10
5,5	11,5	OptiStart MP-32RH-14-T2	OptiStart K-F-26-...	9...14
7,5	15,5	OptiStart MP-32RH-18-T2	OptiStart K-F-26-...	13...18
11	22	OptiStart MP-32RH-23-T2	OptiStart K-F-26-...	17...23
15	29	OptiStart MP-32RH-32-T2	OptiStart K-F-32-...	24...32
18,5	35	OptiStart MP-63R-50-T2	OptiStart K-F-38-...	34...50
22	41	OptiStart MP-63R-50-T2	OptiStart K-F-50-...	34...50
30	55	OptiStart MP-63R-63-T2	OptiStart K-F-65-...	45...63
37	66	OptiStart MP-100R-75-T2	OptiStart K-F-80-...	55...75
45	80	OptiStart MP-100R-90-T2	OptiStart K-F-80-...	70...90
55	97	OptiStart MP-100R-100-T2	OptiStart K-F-115-...	80...100

[1] The motor rated currents are provided for reference only and may vary depending on the motor manufacturer and number of poles.

Accessories

Auxiliary contacts

Appearance	Compatible devices	Mounting method	Contacts		Product name	Code	Weight, kg
			NO	NC			
	MP-32RH-...-T2 MP-32RHI-...-T2	Frontal (transverse)	1	1	OptiStart MP-HQ11-T2	340185	0,04
			2	0	OptiStart MP-HQ20-T2	340186	0,04
		Side, left	0	2	OptiStart MP-HS02-T2	340187	0,02
			1	1	OptiStart MP-HS11-T2	340188	0,02
			2	0	OptiStart MP-HS20-T2	340189	0,02
	MP-63R-...-T2 MP-100R-...-T2	Frontal (transverse)	0	2	OptiStart MP-HQ02-63/100-T2	348543	0,02
			1	1	OptiStart MP-HQ11-63/100-T2	348574	0,02
			2	0	OptiStart MP-HQ20-63/100-T2	348575	0,02
		Side, left	0	2	OptiStart MP-HS02-63/100-T2	348576	0,04
			1	1	OptiStart MP-HS11-63/100-T2	348577	0,04
			2	0	OptiStart MP-HS20-63/100-T2	348580	0,04

Signal contacts

Appearance	Compatible devices	Mounting method	Tripping condition	Contacts		Product name	Code	Weight, kg
				NO	NC			
	MP-32RH-...-T2 MP-32RHI-...-T2	Side, left	Any disabling	1	1	OptiStart MP-MA11-T2	340191	0,04
			At short circuit only	1	1	OptiStart MP-M11-T2	340190	0,04
	MP-63R-...-T2		Any disabling	1	1	OptiStart MP-MA11-63/100-T2	348545	0,04

Undervoltage release

Appearance	Compatible devices	Mounting method	Rated voltage, V, 50 Hz	Contacts	Product name	Code	Weight, kg
	MP-32RH-...-T2 MP-32RHI-...-T2	Side, right	24	-	OptiStart MP-U24-T2	340194	0,10
			110-127	-	OptiStart MP-U110-T2	340192	0,10
			220-230	-	OptiStart MP-U230-T2	340193	0,10
			380-400	-	OptiStart MP-U400-T2	340195	0,10
			24	1 NO with advance tripping	OptiStart MP-UX24-T2	340198	0,10
			110-127		OptiStart MP-UX110-T2	340196	0,10
			220-230		OptiStart MP-UX230-T2	340197	0,10
			380-400		OptiStart MP-UX400-T2	340199	0,10
	MP-63R-...-T2 MP-100R-...-T2		220-230	-	OptiStart MP-U230-63/100-T2	348583	0,13
			380-400	-	OptiStart MP-U400-63/100-T2	348584	0,13

Shunt trip

Appearance	Compatible devices	Mounting method	Rated voltage, V, 50 Hz	Operating voltage	Product name	Code	Weight, kg
	MP-32RH-...-T2 MP-32RHI-...-T2	Side, right	24	16,8–26,4	OptiStart MP-A24-T2	340183	0,10
			110	77–121	OptiStart MP-A110-T2	340181	0,10
			230	161–253	OptiStart MP-A230-T2	340182	0,10
			400	280–440	OptiStart MP-A400-T2	340184	0,10
	MP-63R-...-T2 MP-100R-...-T2		24	16,8–26,4	OptiStart MP-A24-63/100-T2	348570	0,13
			110	77–121	OptiStart MP-A110-63/100-T2	348571	0,13
			230	161–253	OptiStart MP-A230-63/100-T2	348573	0,13
			400	280–440	OptiStart MP-A400-63/100-T2	348539	0,13

Comb busbars (three-phase busbars)

Appearance	Compatible devices	Rated operating current, A	Number of circuit breakers	Possible number of side contacts	Product name	Code	Weight, kg
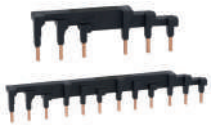	MP-32RH-...-T2 MP-32RHI-...-T2	63	2	0	OptiStart MP-32-S2-T2	340168	0,03
		63	3	0	OptiStart MP-32-S3-T2	340169	0,05
		63	4	0	OptiStart MP-32-S4-T2	340170	0,08
		63	5	0	OptiStart MP-32-S5-T2	340171	0,10
		63	2	1	OptiStart MP-32-S2-54-T2	340172	0,04
		63	3	1	OptiStart MP-32-S3-54-T2	340173	0,06
		63	4	1	OptiStart MP-32-S4-54-T2	340174	0,09
		63	5	1	OptiStart MP-32-S5-54-T2	340175	0,09
		63	Terminal block for connecting the input cable		OptiStart MP-32-ST-T2	357847	0,05
		-	Protective cover for unused pins		OptiStart MP-32-SF-T2	340176	0,01

Door-mounted rotary mechanism (extended handle)

Appearance	Compatible devices	Type	Product name	Code	Weight, kg
	MP-32RH-...-T2 MP-32RHI-...-T2	Black extended handle with 200 mm stem	OptiStart MP-32R-EH1-200-T2	340165	0,15
		Yellow-red extended handle with 200 mm stem	OptiStart MP-32R-EHN1-200-T2	340164	0,15
		Stem holder	OptiStart MP-32R-EN-T2	349886	0,03
	MP-63R-...-T2 MP-100R-...-T2	Black extended handle with 200 mm stem	OptiStart MP-63/100-EH1-200	345667	0,12

Appearance	Compatible devices	Type	Product name	Code	Weight, kg
	MP-63R-...-T2 MP-100R-...-T2	Yellow-red extended handle with 200 mm stem	OptiStart MP-63/100-EHN1-200	345666	0,12

Другие аксессуары

Appearance	Compatible devices	Type	Product name	Code	Weight, kg
	MP-32RH-...-T2 MP-32RHI-...-T2	Connection module with OptiStart K-F-09...25 contactor with AC coil	OptiStart MP-32-KF25A-T2	340178	0,04
		Connection module with OptiStart K-F-09...25 contactor with DC coil	OptiStart MP-32-KF25D-T2	340179	0,05
		Connection module with OptiStart K-F-26...38 contactor with AC coil	OptiStart MP-32-KF38A-T2	340180	0,05
		Connection module with OptiStart K-M mini-contactor	OptiStart MP-32-KM-T2	340177	0,02
		Enclosure for circuit breaker with black handle	OptiStart MP-32R-PFH4-T2	340166	0,25
		Enclosure for circuit breaker with yellow-red handle	OptiStart MP-32R-PFHN4-T2	340167	0,35
		Bracket for screw fixing on mounting plate	OptiStart MP-32-L-T2	340163	0,01

Delivery package

Installation and maximum combination of auxiliary and signaling contact units, undervoltage releases and shunt trips on MP-32RH...-T2 and MP-32RHI...-T2 circuit breakers

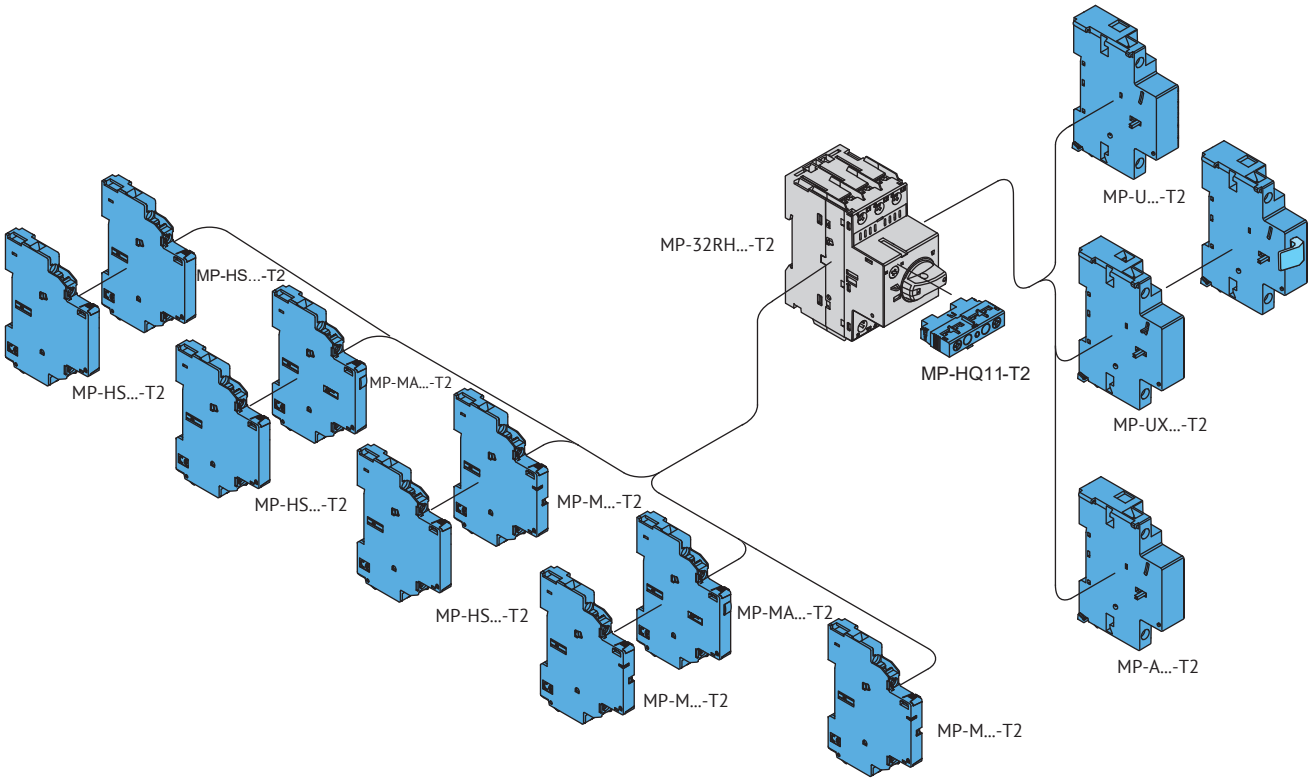

Installation and maximum combination of auxiliary and signaling contact units, undervoltage releases and shunt trips on MP-63R...-T2 and MP-100R...-T2 circuit breakers

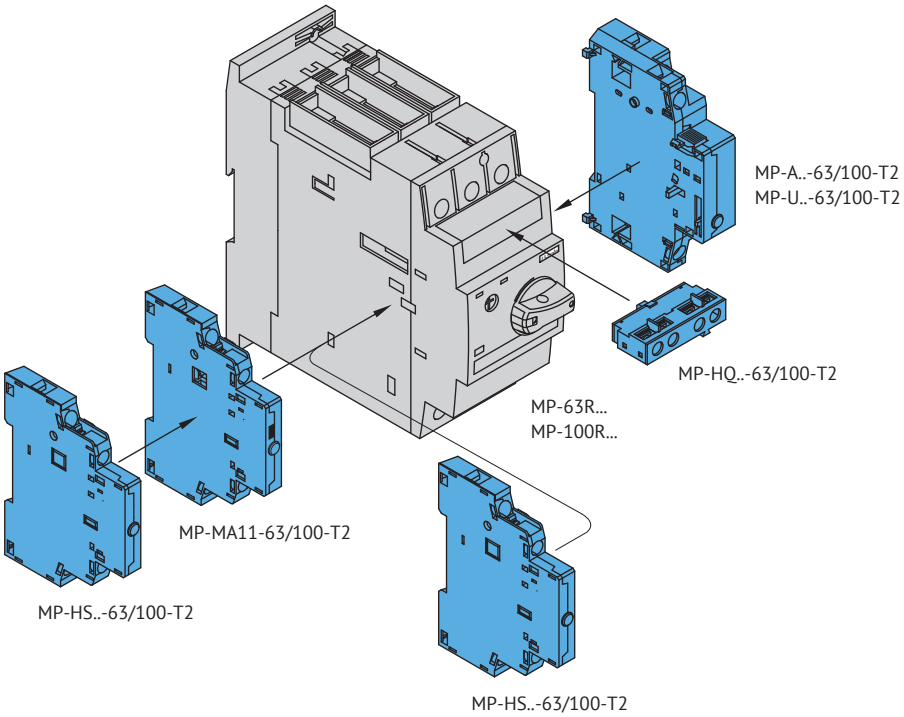

Installation diagrams for three-phase busbars (comb busbars) for parallel connection of circuit breakers

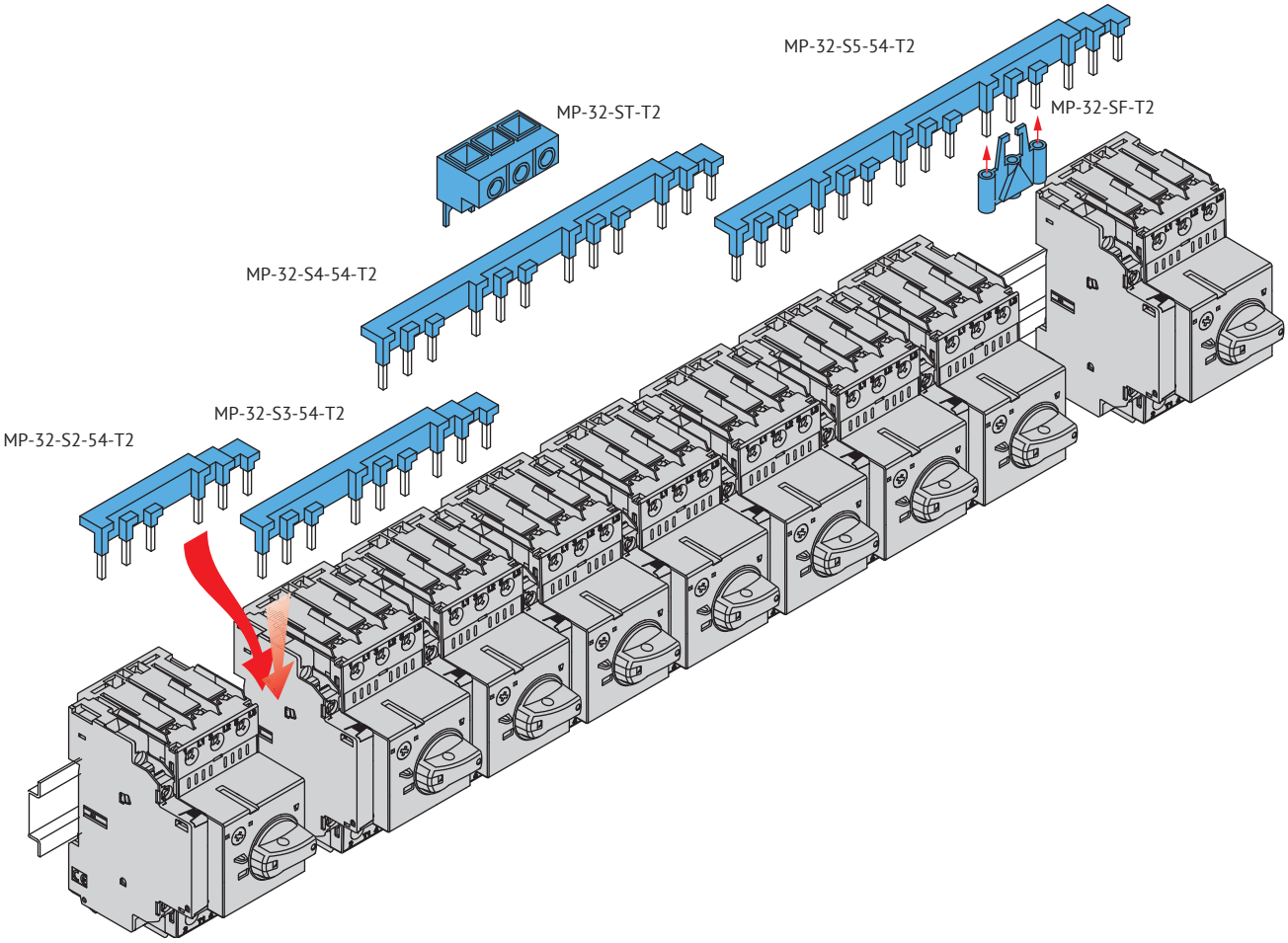

Connection modules for compact assembly of circuit breakers with series OptiStart K contactors

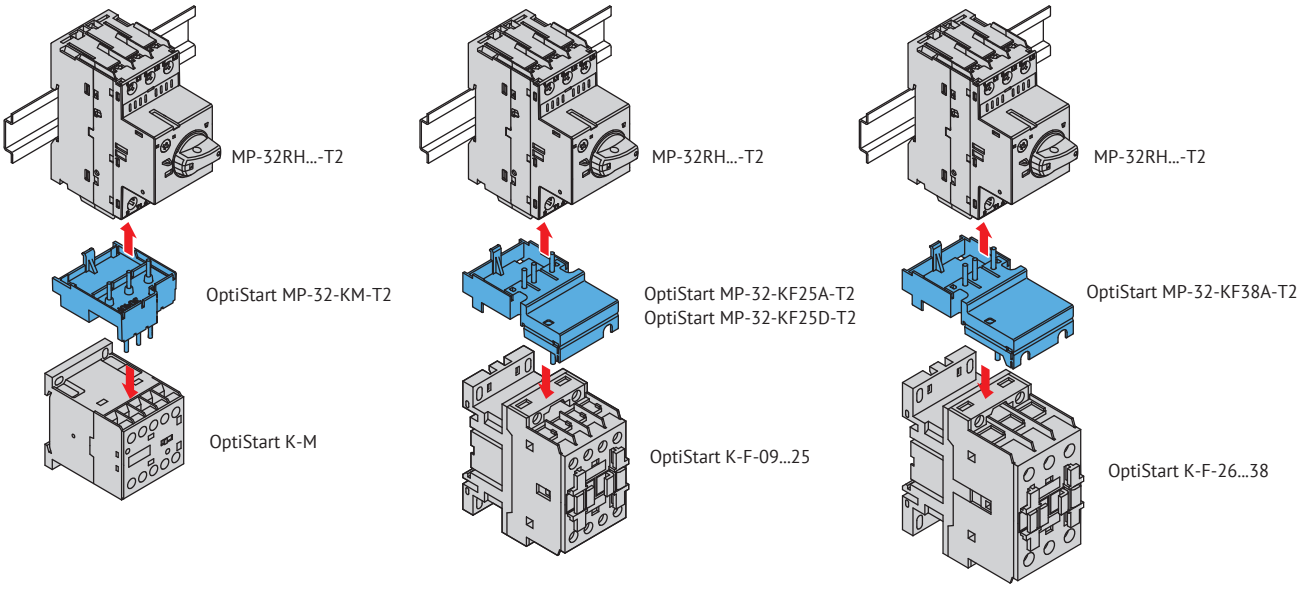

Casing with protection degree IP65 for separate installation of MP-32RH...-T2 and MP-32RHI...-T2 circuit breakers and their maximum configuration

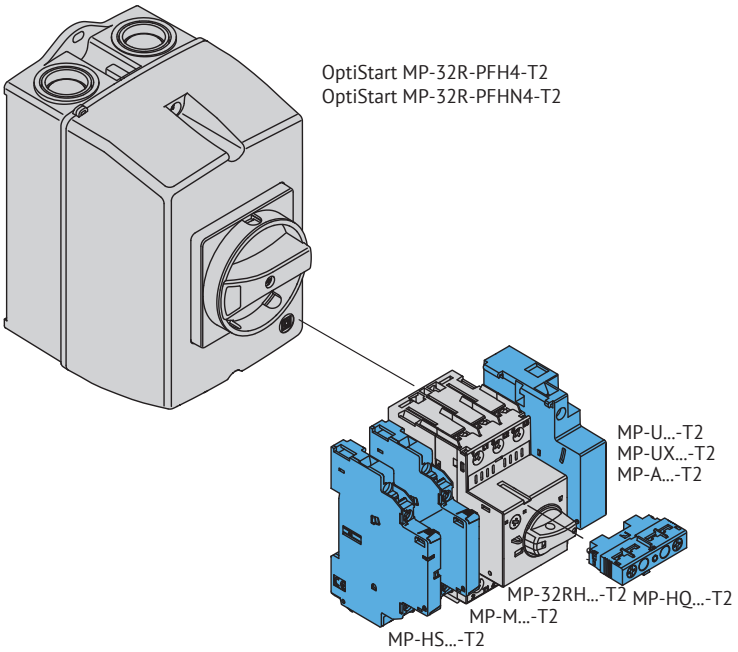

Diagram of the door-mounted rotary mechanism (extended handle), designed to control MP-32RH...-T2 and MP-32RHI...-T2 circuit breakers installed in enclosure or distribution cabinet

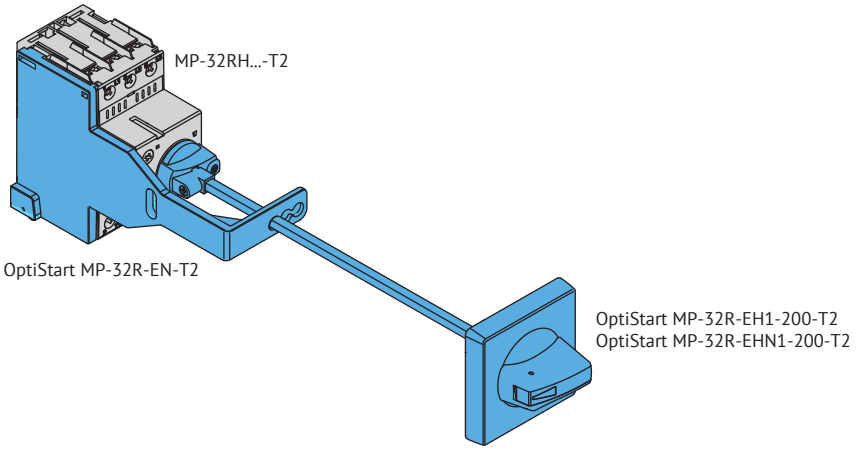

Diagram of the door-mounted rotary mechanism (extended handle) designed to control MP-63R...-T2 and MP-100R...-T2 circuit breakers installed in enclosure or distribution cabinet

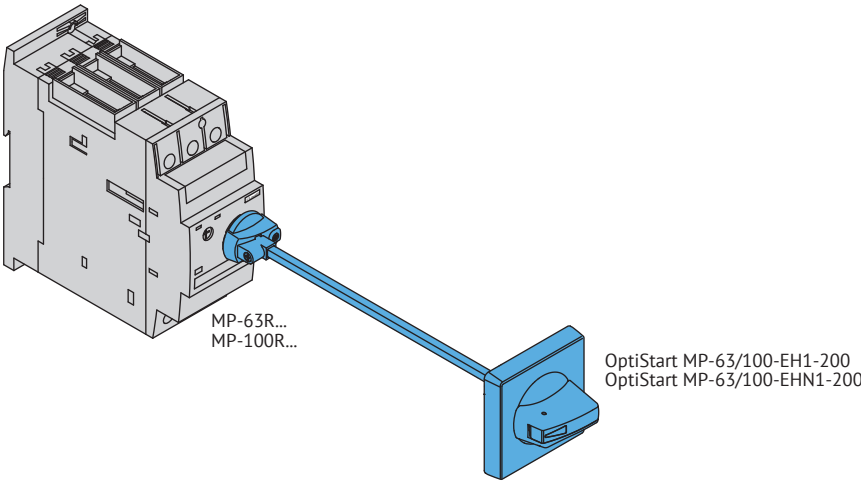

Overall dimensions (mm)

Circuit breakers MP-32RH...-T2 and MP-32RHI...-T2

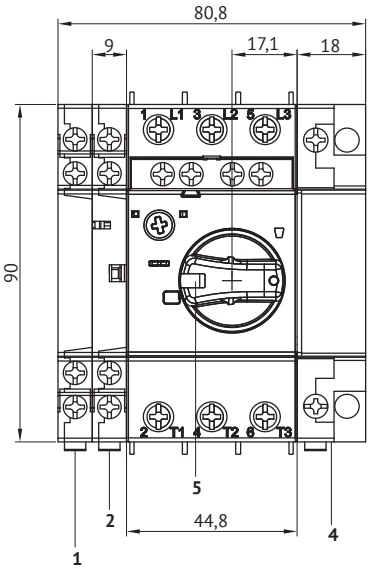

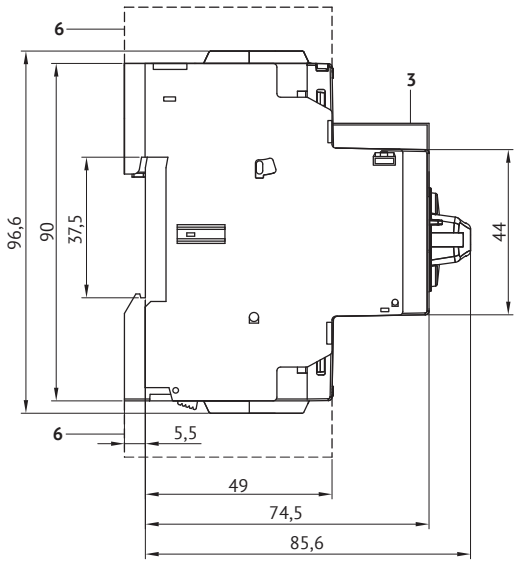

1 — side auxiliary contact MP-HS...-T2;
2 — signal contact MP-M11-T2, MP-MA11-T2;
3 — transverse (front) auxiliary contact MP-HQ...-T2;
4 — shunt trip MP-A...-T2, undervoltage release MP-U...-T2 or MP-UX...-T2;
5— handle lock in «off» position (Ø5 mm).

Circuit breakers MP-63R...-T2

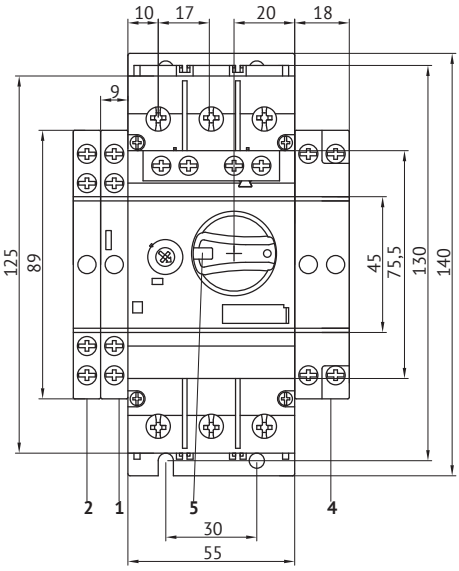

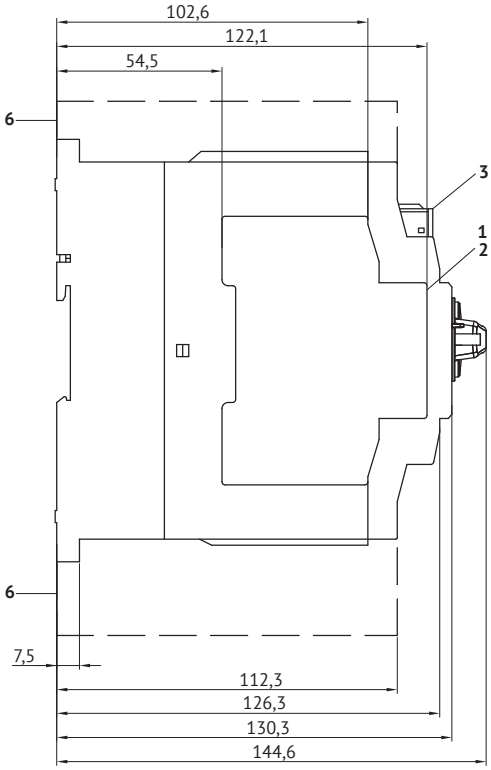

1 — Signal contact MP-MA11-63/100-T2
2 — Side auxiliary contact MP-HS...-T2
3 — Transverse (front) auxiliary contact MP-HQ-...-63/100-T2
4 — shunt trip MP-A..., undervoltage release MP-U...-T2;
5— handle lock in «off» position (Ø5 mm).

Circuit breakers MP-100R...-T2

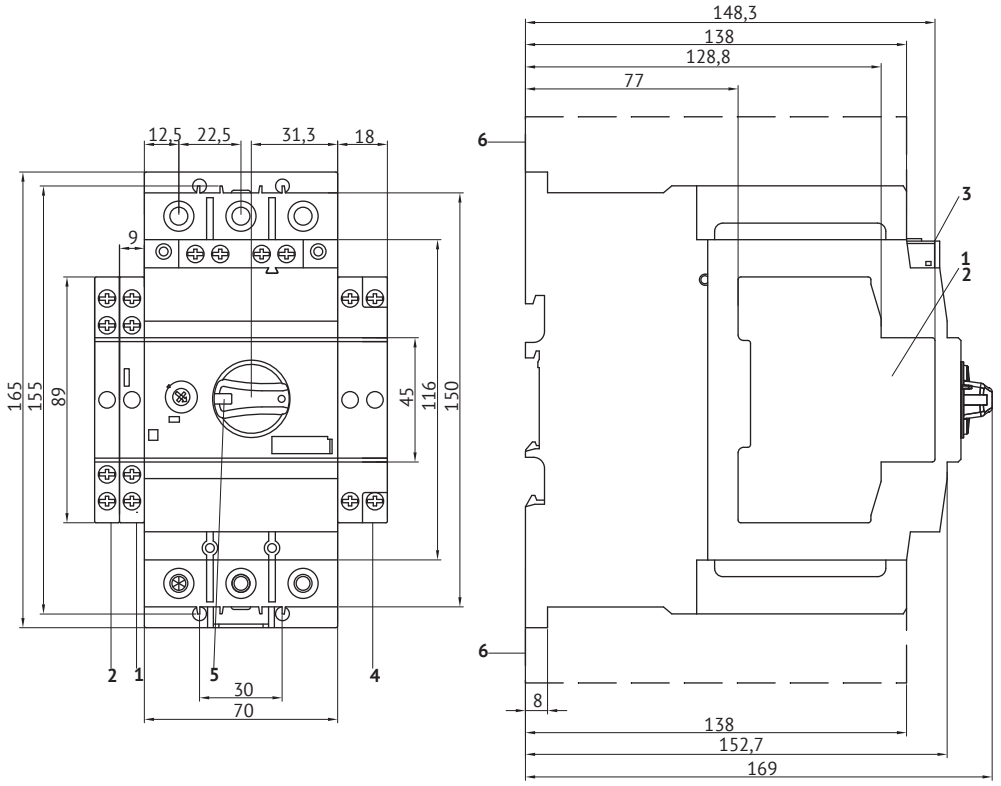

1 — Signal contact MP-MA11-63/100-T2
2 — Side auxiliary contact MP-HS...-T2
3 — Transverse (front) auxiliary contact MP-HQ-...-63/100-T2
4 — Shunt trip MP-A..., undervoltage release MP-U...-T2
5 — Handle lock in the «off» position (Ø5 mm)

Three-phase insulated busbars MP-32-S...-T2

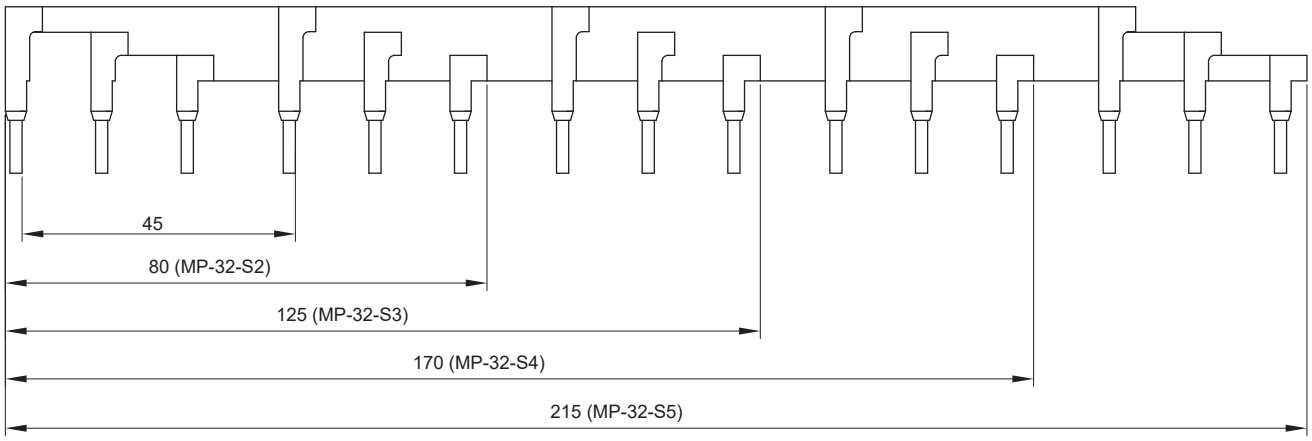

Three-phase insulated busbars MP-32-S...-54

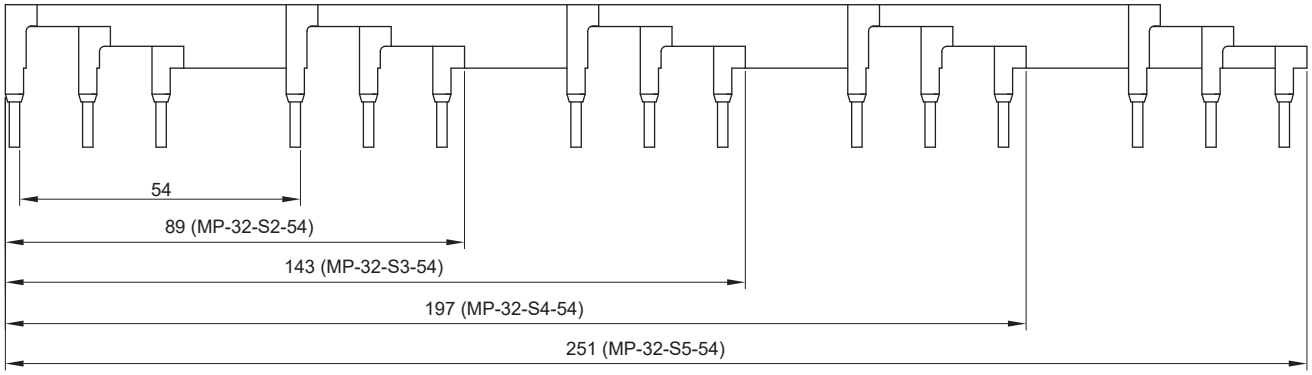

Assembly MP-32RH(I)...-T2 + MP-32-KM-T2 + M-09...M-12

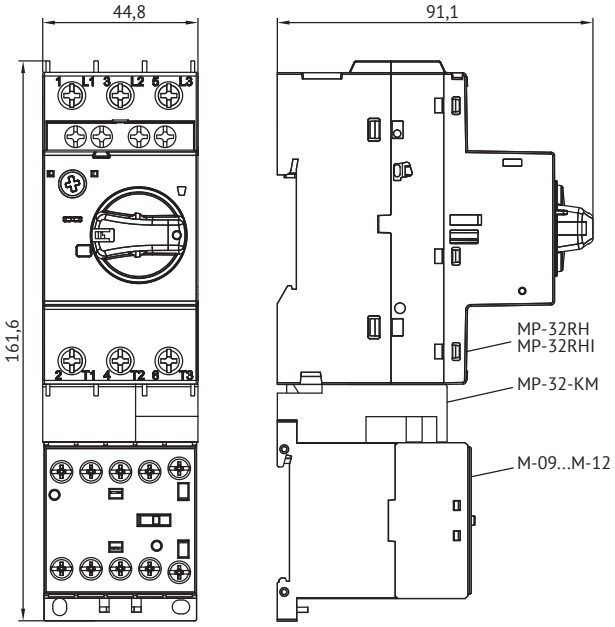

Assembly MP-32RH(I)...-T2 + MP-32-KF25A-T2 + F-09-A...F-25-A

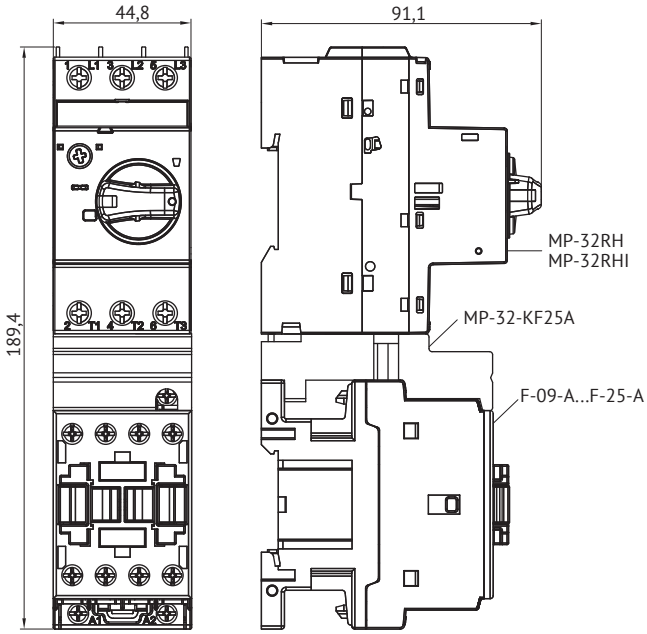

Assembly MP-32RH(I)...-T2 + MP-32-KF25A-T2 + F-09-D...F-25-D

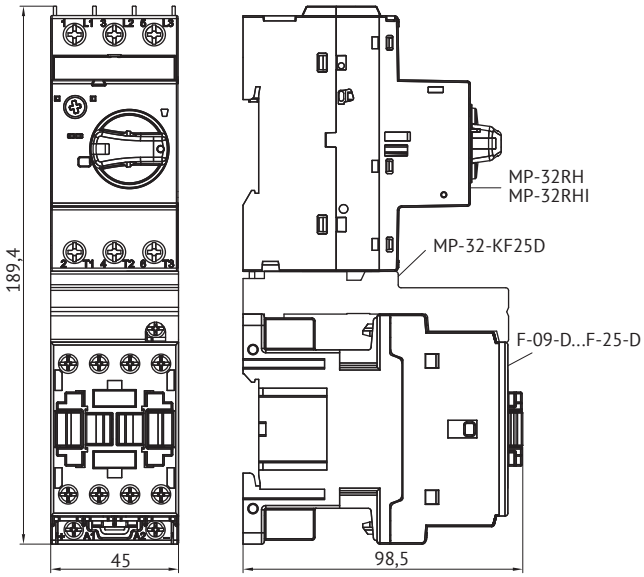

Assembly MP-32RH(I)...-T2 + MP-32-KF38A-T2 + F-26-A...F-38-A

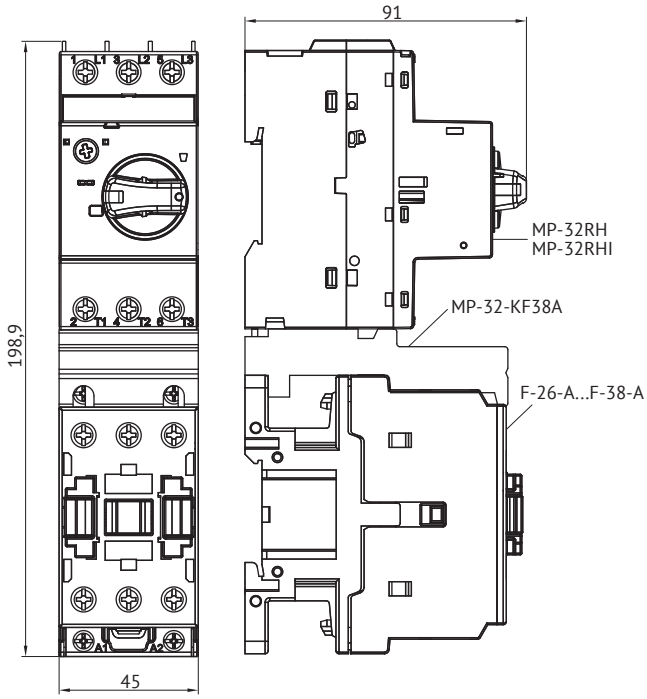

Door-mounted rotary mechanism MP-32R-EH(N)1-200-T2 and OptiStart MP-63/100-EH(N)1-200

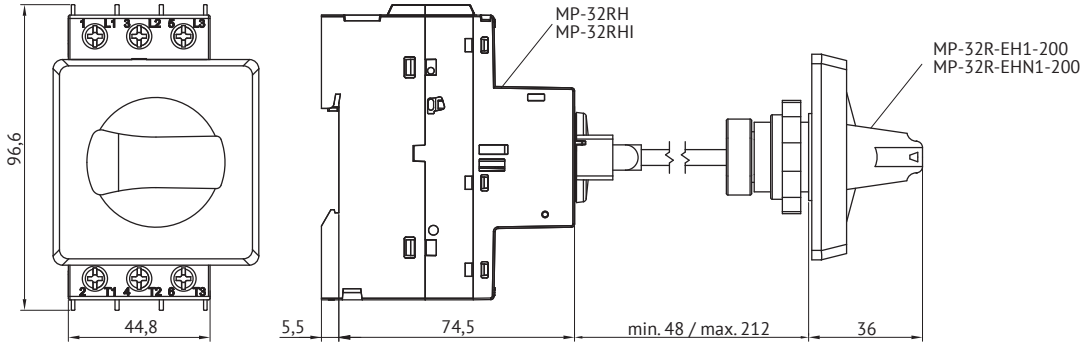

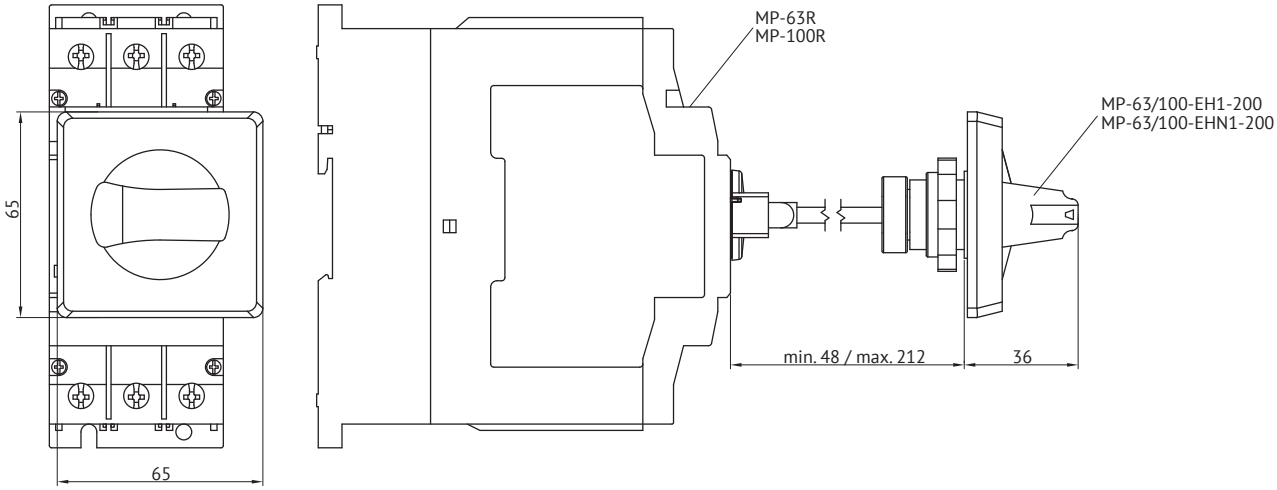

Enclosure OptiStart MP-32R-PFH(N)4-T2

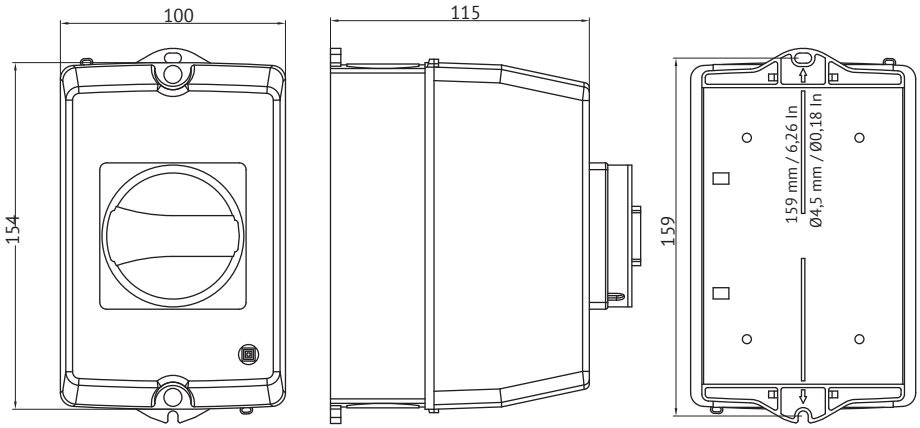

Terminal block MP-32-ST and other mounting accessories

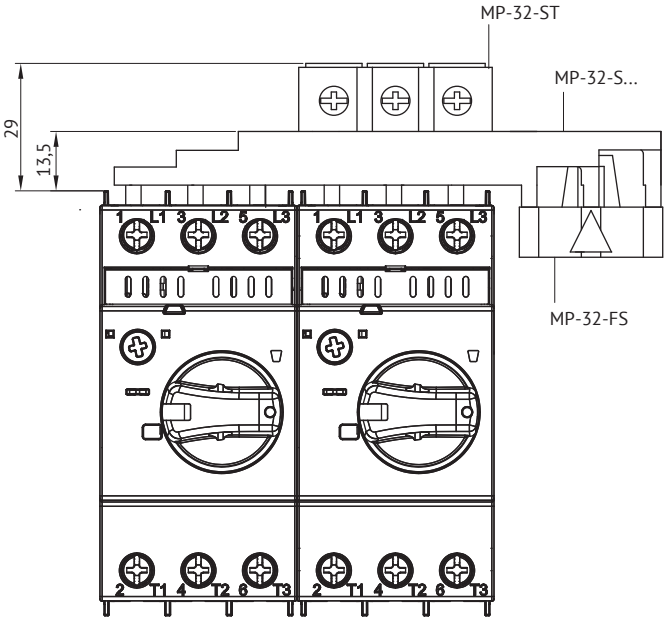

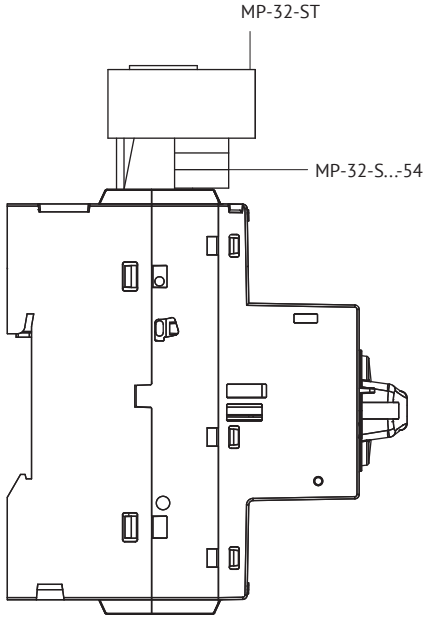

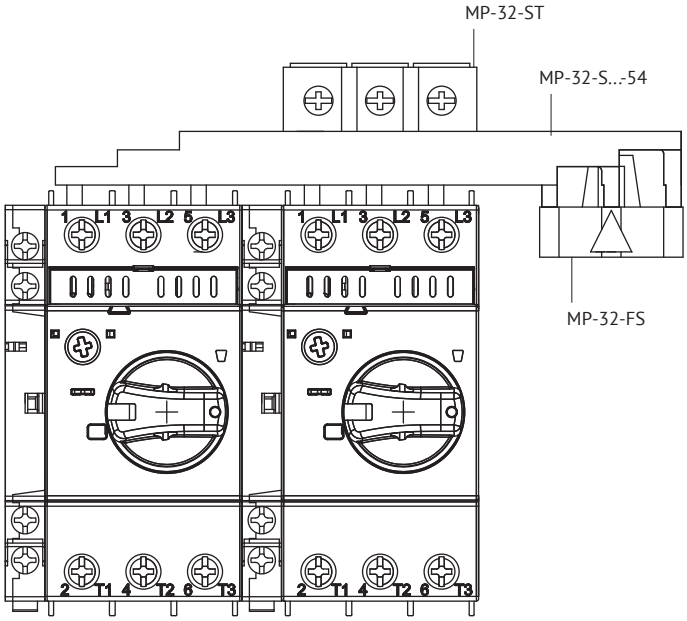

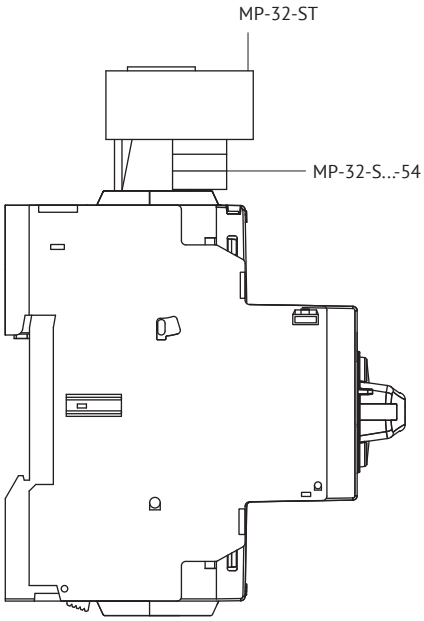

Circuit diagrams

Circuit breakers MP-32RH...-T2, MP-63R...-T2 and MP-100R...-T2

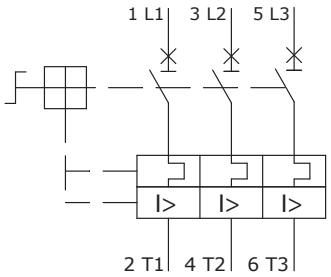

Circuit breakers MP-32RHI...-T2

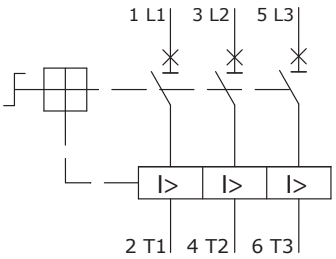

Transverse (front) auxiliary contact units MP-HQ...-T2

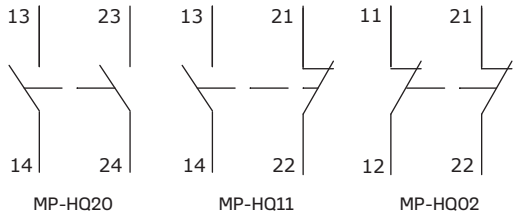

Side auxiliary contact units MP-HS...-T2

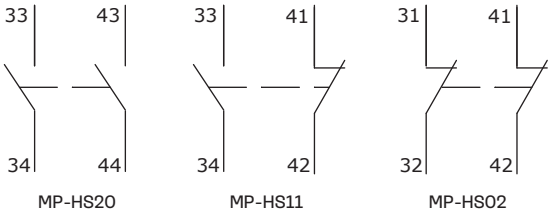

Side auxiliary contact units MP-MA11...-T2

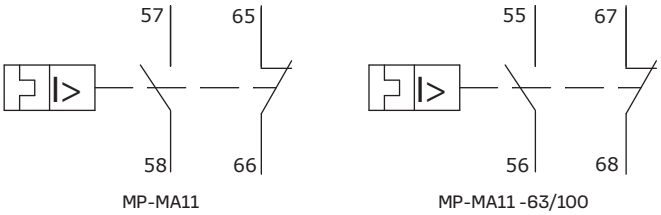

Side signal contact units MP-M11...-T2

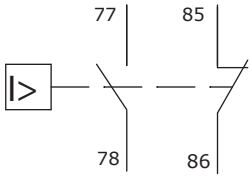

Shunt trip MP-A...-T2

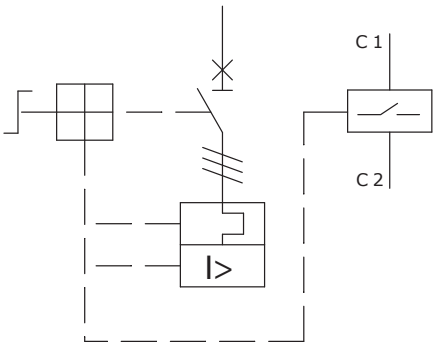

Undervoltage release MP-U...-T2

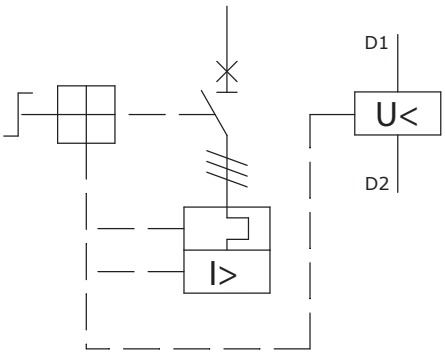

Undervoltage release MP-UX...-T2

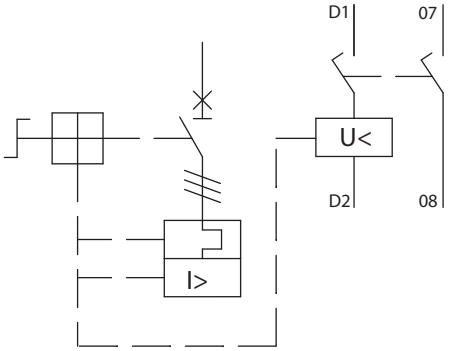

Series connection of poles for single-phase motor connection

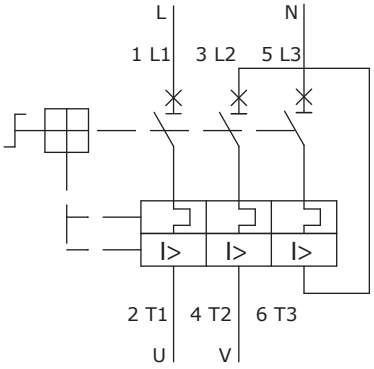

OptiStart K

↗ Contactors

The new contactor series OptiStart K is represented by the most modern solutions for electric motors control. The range includes both classic solutions with an AC, DC or AC/DC control coil, and modern OptiStart K-AF contactors with an electronic control coil power supply system, which feature numerous advantages compared to traditional solutions and fully meet all requirements of the modern market.
The range of the updated series is represented by OptiStart K-F electromagnetic block contactors designed for currents from 9 to 630 A AC-3 (1600 A AC-1), available in both three-pole and four-pole versions, OptiStart K-AF contactors with an electronic control coil power supply system, OptiStart K-M mini-contactors for currents up to 12 A (20 A AC-1), OptiStart K-FR contactor relays, OptiStart K-MR mini-contactor relays, as well as solutions for switching capacitor banks and DC circuits.
All product lines and versions include a wide range of accessories aimed at obtaining the required configuration and precise matching the customer's Terms of Reference.

Three-pole contactors

– I_{th} (AC-1 at ≤40 °C): 16 to 1600 A;
– I_e (AC-3 440 V): от 6 до 630 A;
– P_{rated} (AC-3 440 В): от 2,2 до 335 kW;
– AC, DC, AC/DC control coil or electronically-controlled AC/DC coil;
– reduced power consumption and built-in surge arrester versions;
– wide range of accessories with quick snap-on installation.

Four-pole contactors

– I_{th} (AC-1 at ≤40 °C): 25 to 1600 A;
– P_{rated} (AC-1 400 V): 14 to 950 kW;
– 4 NO or 2 NO + 2 NC or 4 NC design;
– AC, DC, AC/DC control coil or electronically-controlled AC/DC coil;
– reduced power consumption and built-in surge arrester versions;
– wide range of accessories with quick snap-on installation.

Capacitor contactors

- current-limiting resistors included;
- Q_{rated} (400 V): 7.5 to 100 kVAr;
- AC control coil.

DC switching contactors

- with permanent magnet installed for arc control;
- I_e (DC1, 600 V at ≤55 °C): up to 350 A;
- AC control coil or electronically-controlled AC/DC coil.

Contactor relays

- for switching and galvanic isolation of low-current circuits and control circuits;
- up to 11 contacts with various NO and NC combinations;
- AC or DC control coil;
- reduced power consumption and built-in surge arrester versions.

Mini-contactors and mini-contactor relays

– I_{th} (AC-1 at ≤40 °C): 16 to 20 A;
– I_e (AC-3 440 V): 6 to 12 A;
– P_{rated} (AC-3 440 V): 2,5 to 5,5 kW;
– AC or DC control coil;
– reduced power consumption versions;
– three- and four-pole designs with various pole combinations;
– versions with screw terminals, faston terminals and solder pins;
– four-pole mini-contactors for switching and galvanic isolation of low-current circuits and control circuits.

Designation

Series F contactors

OptiStart K - AF - 150 - 30 - 00 - E 230

(1) (2) (3) (4) (5) (6) (7) (8)

1	Group	OptiStart — Motor control and protection equipment				
2	Series	K — Contactors				
3	Version	**AF** — Contactor with electronically-controlled coil and wide AC/DC supply voltage range **F** — Standard version **FD** — DC circuit switching contactor **FK** — Capacitor switching contactor				
4	Rated current, A	The rated current is specified for utilization category AC-3 at a rated voltage of 400 V. For models F-1000, F-1250 and F-1600, the rated current is specified for utilization category AC-1.				
5	Number of power poles	The first digit stands for the number of NO power contacts. The second digit stands for the number of NC power contacts.				
6	Number of built-in auxiliary contacts	The first digit stands for the number of NO auxiliary contacts. The second digit stands for the number of NC auxiliary contacts.				
7	Control coil type and current type	A — AC control coil	D — DC control coil	U — AC/DC control coil	E — AC/DC control coil with a wide supply voltage range and electronic control	Z — DC control coil with reduced power consumption and ability of direct connection to the PLC
8	Control coil voltage	Rated supply voltage is specified. Information on the operating voltage range and permissible deviations is provided in the «Technical specifications» section.				

Series FR contactor relays

OptiStart K - FR - 31 - A 230

(1) (2) (3) (4) (5) (6)

1	Group	OptiStart — Motor control and protection equipment		
2	Series	K — Contactors		
3	Version	FR — Contactor relay		
4	Quantity and type of contacts	The first digit stands for the number of NO contacts. The second digit stands for the number of NC contacts.		
5	Control coil type and current type	A — AC control coil	D — DC control coil	Z — DC control coil with reduced power consumption and ability of direct connection to the PLC
6	Control coil voltage	Rated supply voltage is specified. Information on the operating voltage range and permissible deviations is provided in the «Technical Specifications» section.		

Series advantages

The universal AC/DC coil with a wide voltage range and electronic control in OptiStart K-AF contactors ensures non-stop operation at the unstable supply voltage level and eliminates unscheduled shutdowns during equipment operation due to voltage surges and dips.

The electronic control system continuously monitors the supply voltage, guarantees precise contactor closure or opening and eliminates bounce of power contacts during voltage dips, and also eliminates the alternating current background, which ensures noiseless operation of the contactor and no vibrations.

Power consumption of OptiStart K-AF contactors is decreased down to 90% compared to classic versions, which reduces operating costs and heat dissipation of contactors, which is most demanded in solutions with an increased degree of protection, where installation of ventilation systems is unacceptable.

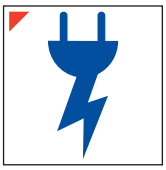

All OptiStart K-AF contactors, as well as OptiStart K-F with DC control coil, are equipped with a built-in surge arrester, which minimizes the impact of switching overvoltages on other equipment in the control circuit.

The new contactors series OptiStart K are capable of operating under extreme operating conditions, since the operating temperature range of most versions is from -50 to +70 °C, which allows to use the equipment in the automation solutions without the need for installation of heating or air conditioning systems.

Contactors OptiStart K-F with DC control coils have an extended control circuit voltage range, which allows to use them in the solutions with unstable supply voltage, including in rail transport according to IEC 60077 / EN50155.

Special versions of contactors with control circuit consumption reduced down to 2.4 W make it possible to connect the contactors directly to the outputs of PLCs and other automation solutions without the use of intermediate relays.

The new generation of contactors is ideal for solutions with limited space, as they have compact dimensions: the width of contactors up to 38 A is 45 mm, up to 95 A — 55 mm, and for currents up to 150 A — only 75 mm.

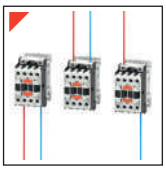

Contactors for currents up to 150 A are capable of connecting the control coil circuit from both top and bottom, which facilitates the connection process regardless of the conductors location.

Snap-on installation of accessories reduces labor costs and does not require the use of any tools; the process itself takes a few seconds.

Contactors with rated currents from 40 to 150 A are equipped with double screw terminals to facilitate installation and improve reliability of solutions that require connection of several conductors, for example, to implement reversing assembly.

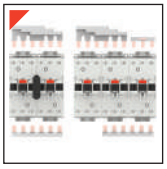

Implementation of reversing assembly, parallel connection or star-delta motor control solution using connection adapters reduces installation time and eliminates the possibility of errors during connection.

Three-pole contactors for currents from 26 to 150 A can be supplemented with the fourth power pole, which is installed by snapping on and converts a three-pole contactor into the four-pole one.

The range of accessories for interlocking is presented by front and side mounting versions, for mechanical and electromechanical interlocking and also includes versions that are installed between contactors without increasing the overall assembly width.

Installation and removal of contactors on a Din-rail is carried out without the use of tools; the clamps have a special rubber insert that prevents the contactor from moving even when installed on a vertical din-rail.

Selection guide

Three-pole contactors

Appearance	Type	Rated current, A				Maximum power at ≤55 °C (AC-3), kW						
		I_{th} (AC-1)			I_e (AC-3)							
		≤40 °C	≤55 °C	≤70 °C	≤440 V ≤55 °C	230 V	400 V	415 V	440 V	500 V	690 V	1000 V
	F-09-30-01... F-09-30-10...	25	20	18	9	2,2	4,2	4,5	4,8	5,5	7,5	--
	F-12-30-01... F-12-30-10...	28	23	20	12	3,2	5,7	6,2	6,2	7,5	10	--
	F-18-30-01... F-18-30-10...	32	26	23	18	4	7,5	9	9	10	10	--
	F-25-30-01... F-25-30-10...	32	26	23	25	7	12,5	13,4	13,4	15	11	--
	F-26-30-00...	45	36	32	26	7,3	13	14	14	15,6	18,5	--
	F-32-30-00...	56	45	40	32	8,8	16	17	17	20	22	--
	F-38-30-00...	56	45	40	38	11	18,5	18,5	18,5	20	22	--
	F-40-30-00... AF-40-30-00...	70	60	50	40	11	18,5	22	22	22	30	18,5
	F-50-30-00... AF-50-30-00...	90	75	65	50	15	22	30	30	30	37	22
	F-65-30-00... AF-65-30-00...	100	80	70	65	18,5	30	37	37	37	45	30
	F-80-30-00... AF-80-30-00...	115	95	80	80	22	37	45	45	55	55	37
	F-94-30-00... AF-94-30-00...	115	95	80	95	30	45	55	55	55	55	37
	F-95-30-00... AF-95-30-00...	140	115	100	95	30	45	55	55	75	90	45
	F-115-30-00... AF-115-30-00...	160	130	115	115	37	55	55	55	75	110	55
	F-150-30-00... AF-150-30-00...	165	135	118	150	45	75	75	75	90	110	55
	AF-160-30-00...	250	210	180	160	45	75	90	90	110	132	75
	AF-195-30-00...	275	230	200	195	55	90	110	110	132	160	90
	AF-230-30-00...	350	290	250	230	55	110	110	132	132	160	110
	AF-265-30-00...	450	375	325	265	75	132	132	160	160	200	160
	AF-330-30-00...	500	415	360	330	90	160	160	160	200	250	185
	AF-400-30-00...	600	500	435	400	110	200	200	200	250	315	200
	F-500-30-00...	700	550	500	520	156	290	306	328	367	416	312
	F-630-30-00...	800	640	540	630	198	355	368	368	368	440	368
	F-1000-30-00...	1000	850	700	For utilization category AC-1 only							
	F-1250-30-24...	1250	1050	880	For utilization category AC-1 only							
	F-1600-30-24...	1600	1360	1120	For utilization category AC-1 only							

Four-pole contactors

Appearance	Type	Rated current, A				Maximum power at ≤40 °C (AC-1), kW						
		I_{th} (AC1)			I_e (AC3)							
		≤40 °C	≤55 °C	≤70 °C	≤440 V ≤55 °C	230 V	400 V	415 V	440 V	500 V	690 V	1000 V
	F-09-40-00... F-09-22-00...	25	20	18	9	9,5	16	17	18	21	27	–
	F-12-40-00...	28	23	20	12	10	18	19	20	23	32	–
	F-18-40-00... F-18-22-00... F-18-04-00...	32	26	23	18	12	21	22	23	26	36	–
	F-26-40-00... F-26-22-00... F-26-04-00...	45	36	32	26	17	30	31	33	37	51	–
	F-38-40-00... F-38-22-00...	56	45	40	38	21	36	38	40	45	62	–
	F-40-40-00...	70	60	50	40	26	46	48	51	58	79	115
	F-50-40-00...	90	75	65	50	34	59	61	65	74	102	148
	F-65-40-00... AF-65-40-00...	100	80	70	65	38	65	68	72	82	114	165
	F-80-40-00... AF-80-40-00... F-80-22-00... AF-80-22-00...	115	95	80	80	43	76	79	83	95	120	185
	F-95-40-00... AF-95-40-00...	140	115	100	95	53	92	96	101	115	159	230
	F-115-40-00...	160	130	115	115	61	105	109	116	132	182	263
	F-150-40-00... AF-150-40-00...	165	135	118	150	62	110	113	119	136	187	271
	AF-160-40-00...	250	210	180	160	95	165	171	181	206	284	411
	AF-195-40-00...	275	230	200	195	104	181	188	199	226	312	452
	AF-230-40-00...	350	290	250	230	132	230	239	253	288	397	576
	AF-265-40-00...	450	375	325	265	170	296	296	-	326	511	-
	AF-330-40-00...	500	415	360	330	189	329	329	-	362	568	-
	AF-400-40-00...	600	500	435	400	227	395	395	-	434	681	-
	F-500-40-00...	700	550	500	520	252	438	478	500	575	755	1100
	F-630-40-00...	800	640	540	630	288	500	545	580	655	860	1250
	F-1000-40-00...	1000	850	700	–	350	600	630	725	750	1000	1600

Items

Series F contactors

Three-pole series F contactors with AC control coil

Appearance	Rated current (AC-3, 400 V, ≤55 °C), A	Rated power (AC-3, 400 V, ≤55 °C), kW	Auxiliary contacts		Control coil rated voltage, V AC	Product name	Code
			NO	NC			
	09	4,2	0	1	24	OptiStart K-F-09-30-01-A024	334548
	09	4,2	0	1	48	OptiStart K-F-09-30-01-A048	334549
	09	4,2	0	1	110	OptiStart K-F-09-30-01-A110	334550
	09	4,2	0	1	230	OptiStart K-F-09-30-01-A230	334551
	09	4,2	0	1	400	OptiStart K-F-09-30-01-A400	334552
	09	4,2	1	0	24	OptiStart K-F-09-30-10-A024	334562
	09	4,2	1	0	48	OptiStart K-F-09-30-10-A048	334563
	09	4,2	1	0	110	OptiStart K-F-09-30-10-A110	334564
	09	4,2	1	0	230	OptiStart K-F-09-30-10-A230	334565
	09	4,2	1	0	400	OptiStart K-F-09-30-10-A400	334566
	12	5,7	0	1	24	OptiStart K-F-12-30-01-A024	334595
	12	5,7	0	1	48	OptiStart K-F-12-30-01-A048	334596
	12	5,7	0	1	110	OptiStart K-F-12-30-01-A110	334597
	12	5,7	0	1	230	OptiStart K-F-12-30-01-A230	334598
	12	5,7	0	1	400	OptiStart K-F-12-30-01-A400	334599
	12	5,7	1	0	24	OptiStart K-F-12-30-10-A024	334609
	12	5,7	1	0	48	OptiStart K-F-12-30-10-A048	334610
	12	5,7	1	0	110	OptiStart K-F-12-30-10-A110	334611
	12	5,7	1	0	230	OptiStart K-F-12-30-10-A230	334612
	12	5,7	1	0	400	OptiStart K-F-12-30-10-A400	334613
	18	7,5	0	1	24	OptiStart K-F-18-30-01-A024	334628
	18	7,5	0	1	48	OptiStart K-F-18-30-01-A048	334629
	18	7,5	0	1	110	OptiStart K-F-18-30-01-A110	334630
	18	7,5	0	1	230	OptiStart K-F-18-30-01-A230	334631
	18	7,5	0	1	400	OptiStart K-F-18-30-01-A400	334632
	18	7,5	1	0	24	OptiStart K-F-18-30-10-A024	334642
	18	7,5	1	0	48	OptiStart K-F-18-30-10-A048	334643
	18	7,5	1	0	110	OptiStart K-F-18-30-10-A110	334644
	18	7,5	1	0	230	OptiStart K-F-18-30-10-A230	334645
	18	7,5	1	0	400	OptiStart K-F-18-30-10-A400	334646
	25	12,5	0	1	24	OptiStart K-F-25-30-01-A024	334698
	25	12,5	0	1	48	OptiStart K-F-25-30-01-A048	334699
	25	12,5	0	1	110	OptiStart K-F-25-30-01-A110	334700
	25	12,5	0	1	230	OptiStart K-F-25-30-01-A230	334701
	25	12,5	0	1	400	OptiStart K-F-25-30-01-A400	334702
	25	12,5	1	0	24	OptiStart K-F-25-30-10-A024	334712
	25	12,5	1	0	48	OptiStart K-F-25-30-10-A048	334713
	25	12,5	1	0	110	OptiStart K-F-25-30-10-A110	334714
	25	12,5	1	0	230	OptiStart K-F-25-30-10-A230	334715
	25	12,5	1	0	400	OptiStart K-F-25-30-10-A400	334716
	26	13	0	0	24	OptiStart K-F-26-30-00-A024	334726
	26	13	0	0	48	OptiStart K-F-26-30-00-A048	334727
	26	13	0	0	110	OptiStart K-F-26-30-00-A110	334728
	26	13	0	0	230	OptiStart K-F-26-30-00-A230	334729
	26	13	0	0	400	OptiStart K-F-26-30-00-A400	334730
	32	16	0	0	24	OptiStart K-F-32-30-00-A024	334780
	32	16	0	0	48	OptiStart K-F-32-30-00-A048	334781
	32	16	0	0	110	OptiStart K-F-32-30-00-A110	334782
	32	16	0	0	230	OptiStart K-F-32-30-00-A230	334783
	32	16	0	0	400	OptiStart K-F-32-30-00-A400	334784
	38	18,5	0	0	24	OptiStart K-F-38-30-00-A024	334794
	38	18,5	0	0	48	OptiStart K-F-38-30-00-A048	334795
	38	18,5	0	0	110	OptiStart K-F-38-30-00-A110	334796
	38	18,5	0	0	230	OptiStart K-F-38-30-00-A230	334797
	38	18,5	0	0	400	OptiStart K-F-38-30-00-A400	334798

Appearance	Rated current (AC-3, 400 V, ≤55 °C), A	Rated power (AC-3, 400 V, ≤55 °C), kW	Auxiliary contacts		Control coil rated voltage, V AC	Product name	Code
			HO	NC			
	40	18,5	0	0	24	OptiStart K-F-40-30-00-A024	334836
	40	18,5	0	0	48	OptiStart K-F-40-30-00-A048	334837
	40	18,5	0	0	110	OptiStart K-F-40-30-00-A110	334838
	40	18,5	0	0	230	OptiStart K-F-40-30-00-A230	334839
	40	18,5	0	0	400	OptiStart K-F-40-30-00-A400	334840
	50	22	0	0	24	OptiStart K-F-50-30-00-A024	334846
	50	22	0	0	48	OptiStart K-F-50-30-00-A048	334847
	50	22	0	0	110	OptiStart K-F-50-30-00-A110	334848
	50	22	0	0	230	OptiStart K-F-50-30-00-A230	334849
	50	22	0	0	400	OptiStart K-F-50-30-00-A400	334850
	65	30	0	0	24	OptiStart K-F-65-30-00-A024	334856
	65	30	0	0	48	OptiStart K-F-65-30-00-A048	334857
	65	30	0	0	110	OptiStart K-F-65-30-00-A110	334858
	65	30	0	0	230	OptiStart K-F-65-30-00-A230	334859
	65	30	0	0	400	OptiStart K-F-65-30-00-A400	334860
	80	37	0	0	24	OptiStart K-F-80-30-00-A024	334866
	80	37	0	0	48	OptiStart K-F-80-30-00-A048	334867
	80	37	0	0	110	OptiStart K-F-80-30-00-A110	334868
	80	37	0	0	230	OptiStart K-F-80-30-00-A230	334869
	80	37	0	0	400	OptiStart K-F-80-30-00-A400	334870
	94	45	0	0	24	OptiStart K-F-94-30-00-A024	334881
	94	45	0	0	48	OptiStart K-F-94-30-00-A048	334882
	94	45	0	0	110	OptiStart K-F-94-30-00-A110	334883
	94	45	0	0	230	OptiStart K-F-94-30-00-A230	334884
	94	45	0	0	400	OptiStart K-F-94-30-00-A400	334885
	95	45	0	0	24	OptiStart K-F-95-30-00-A024	334886
	95	45	0	0	48	OptiStart K-F-95-30-00-A048	334887
	95	45	0	0	110	OptiStart K-F-95-30-00-A110	334888
	95	45	0	0	230	OptiStart K-F-95-30-00-A230	334889
	95	45	0	0	400	OptiStart K-F-95-30-00-A400	334890
	115	55	0	0	24	OptiStart K-F-115-30-00-A024	334902
	115	55	0	0	48	OptiStart K-F-115-30-00-A048	334903
	115	55	0	0	110	OptiStart K-F-115-30-00-A110	334904
	115	55	0	0	230	OptiStart K-F-115-30-00-A230	334905
	115	55	0	0	400	OptiStart K-F-115-30-00-A400	334906
	150	75	0	0	24	OptiStart K-F-150-30-00-A024	334915
	150	75	0	0	48	OptiStart K-F-150-30-00-A048	334916
	150	75	0	0	110	OptiStart K-F-150-30-00-A110	334917
	150	75	0	0	230	OptiStart K-F-150-30-00-A230	334918
	150	75	0	0	400	OptiStart K-F-150-30-00-A400	334919

Three-pole series F contactors with DC control coil

Appearance	Rated current (AC-3, 400 V, ≤55 °C), A	Rated power (AC-3, 400 V, ≤55 °C), kW	Auxiliary contacts		Control coil rated voltage, V AC	Product name	Code
			HO	NC			
	09	4,2	0	1	12	OptiStart K-F-09-30-01-D012	334553
	09	4,2	0	1	24	OptiStart K-F-09-30-01-D024	334554
	09	4,2	0	1	48	OptiStart K-F-09-30-01-D048	334555
	09	4,2	0	1	60	OptiStart K-F-09-30-01-D060	334556
	09	4,2	0	1	110	OptiStart K-F-09-30-01-D110	334557
	09	4,2	0	1	125	OptiStart K-F-09-30-01-D125	334558
	09	4,2	0	1	220	OptiStart K-F-09-30-01-D220	334559
	09	4,2	1	0	12	OptiStart K-F-09-30-10-D012	334567
	09	4,2	1	0	24	OptiStart K-F-09-30-10-D024	334568
	09	4,2	1	0	48	OptiStart K-F-09-30-10-D048	334569
	09	4,2	1	0	60	OptiStart K-F-09-30-10-D060	334570
	09	4,2	1	0	110	OptiStart K-F-09-30-10-D110	334571
	09	4,2	1	0	125	OptiStart K-F-09-30-10-D125	334572
	09	4,2	1	0	220	OptiStart K-F-09-30-10-D220	334573
	12	5,7	0	1	12	OptiStart K-F-12-30-01-D012	334600
	12	5,7	0	1	24	OptiStart K-F-12-30-01-D024	334601
	12	5,7	0	1	48	OptiStart K-F-12-30-01-D048	334602
	12	5,7	0	1	60	OptiStart K-F-12-30-01-D060	334603
	12	5,7	0	1	110	OptiStart K-F-12-30-01-D110	334604
	12	5,7	0	1	125	OptiStart K-F-12-30-01-D125	334605
	12	5,7	0	1	220	OptiStart K-F-12-30-01-D220	334606

Appearance	Rated current (AC-3, 400 V, ≤55 °C), A	Rated power (AC-3, 400 V, ≤55 °C), kW	Auxiliary contacts		Control coil rated voltage, V AC	Product name	Code
			HO	NC			
	12	5,7	1	0	12	OptiStart K-F-12-30-10-D012	334614
	12	5,7	1	0	24	OptiStart K-F-12-30-10-D024	334615
	12	5,7	1	0	48	OptiStart K-F-12-30-10-D048	334616
	12	5,7	1	0	60	OptiStart K-F-12-30-10-D060	334617
	12	5,7	1	0	110	OptiStart K-F-12-30-10-D110	334618
	12	5,7	1	0	125	OptiStart K-F-12-30-10-D125	334619
	12	5,7	1	0	220	OptiStart K-F-12-30-10-D220	334620
	18	7,5	0	1	12	OptiStart K-F-18-30-01-D012	334633
	18	7,5	0	1	24	OptiStart K-F-18-30-01-D024	334634
	18	7,5	0	1	48	OptiStart K-F-18-30-01-D048	334635
	18	7,5	0	1	60	OptiStart K-F-18-30-01-D060	334636
	18	7,5	0	1	110	OptiStart K-F-18-30-01-D110	334637
	18	7,5	0	1	125	OptiStart K-F-18-30-01-D125	334638
	18	7,5	0	1	220	OptiStart K-F-18-30-01-D220	334639
	18	7,5	1	0	12	OptiStart K-F-18-30-10-D012	334647
	18	7,5	1	0	24	OptiStart K-F-18-30-10-D024	334648
	18	7,5	1	0	48	OptiStart K-F-18-30-10-D048	334649
	18	7,5	1	0	60	OptiStart K-F-18-30-10-D060	334650
	18	7,5	1	0	110	OptiStart K-F-18-30-10-D110	334651
	18	7,5	1	0	125	OptiStart K-F-18-30-10-D125	334652
	18	7,5	1	0	220	OptiStart K-F-18-30-10-D220	334653
	25	12,5	0	1	12	OptiStart K-F-25-30-01-D012	334703
	25	12,5	0	1	24	OptiStart K-F-25-30-01-D024	334704
	25	12,5	0	1	48	OptiStart K-F-25-30-01-D048	334705
	25	12,5	0	1	60	OptiStart K-F-25-30-01-D060	334706
	25	12,5	0	1	110	OptiStart K-F-25-30-01-D110	334707
	25	12,5	0	1	125	OptiStart K-F-25-30-01-D125	334708
	25	12,5	0	1	220	OptiStart K-F-25-30-01-D220	334709
	25	12,5	1	0	12	OptiStart K-F-25-30-10-D012	334717
	25	12,5	1	0	24	OptiStart K-F-25-30-10-D024	334718
	25	12,5	1	0	48	OptiStart K-F-25-30-10-D048	334719
	25	12,5	1	0	60	OptiStart K-F-25-30-10-D060	334720
	25	12,5	1	0	110	OptiStart K-F-25-30-10-D110	334721
	25	12,5	1	0	125	OptiStart K-F-25-30-10-D125	334722
	25	12,5	1	0	220	OptiStart K-F-25-30-10-D220	334723
	26	13	0	0	12	OptiStart K-F-26-30-00-D012	334731
	26	13	0	0	24	OptiStart K-F-26-30-00-D024	334732
	26	13	0	0	48	OptiStart K-F-26-30-00-D048	334733
	26	13	0	0	60	OptiStart K-F-26-30-00-D060	334734
	26	13	0	0	110	OptiStart K-F-26-30-00-D110	334735
	26	13	0	0	125	OptiStart K-F-26-30-00-D125	334736
	26	13	0	0	220	OptiStart K-F-26-30-00-D220	334737
	32	16	0	0	12	OptiStart K-F-32-30-00-D012	334785
	32	16	0	0	24	OptiStart K-F-32-30-00-D024	334786
	32	16	0	0	48	OptiStart K-F-32-30-00-D048	334787
	32	16	0	0	60	OptiStart K-F-32-30-00-D060	334788
	32	16	0	0	110	OptiStart K-F-32-30-00-D110	334789
	32	16	0	0	125	OptiStart K-F-32-30-00-D125	334790
	32	16	0	0	220	OptiStart K-F-32-30-00-D220	334791
	38	18,5	0	0	12	OptiStart K-F-38-30-00-D012	334799
	38	18,5	0	0	24	OptiStart K-F-38-30-00-D024	334800
	38	18,5	0	0	48	OptiStart K-F-38-30-00-D048	334801
	38	18,5	0	0	60	OptiStart K-F-38-30-00-D060	334802
	38	18,5	0	0	110	OptiStart K-F-38-30-00-D110	334803
	38	18,5	0	0	125	OptiStart K-F-38-30-00-D125	334804
	38	18,5	0	0	220	OptiStart K-F-38-30-00-D220	334805

Note: All contactor models F-09-...D - F-38-...D include a built-in surge arrester.

Three-pole series F contactors with DC control coil and reduced power consumption (-Z)

Appearance	Rated current (AC-3, 400 V, ≤55 °C), A	Rated power (AC-3, 400 V, ≤55 °C), kW	Auxiliary contacts		Control coil rated voltage, V AC	Product name	Code
			NO	NC			
	09	4,2	0	1	24	OptiStart K-F-09-30-01-Z024	334560
	09	4,2	0	1	48	OptiStart K-F-09-30-01-Z048	334561
	09	4,2	1	0	24	OptiStart K-F-09-30-10-Z024	334574
	09	4,2	1	0	48	OptiStart K-F-09-30-10-Z048	334575
	12	5,7	0	1	24	OptiStart K-F-12-30-01-Z024	334607
	12	5,7	0	1	48	OptiStart K-F-12-30-01-Z048	334608
	12	5,7	1	0	24	OptiStart K-F-12-30-10-Z024	334621
	12	5,7	1	0	48	OptiStart K-F-12-30-10-Z048	334622
	18	7,5	0	1	24	OptiStart K-F-18-30-01-Z024	334640
	18	7,5	0	1	48	OptiStart K-F-18-30-01-Z048	334641
	18	7,5	1	0	24	OptiStart K-F-18-30-10-Z024	334654
	18	7,5	1	0	48	OptiStart K-F-18-30-10-Z048	334655
	25	12,5	0	1	24	OptiStart K-F-25-30-01-Z024	334710
	25	12,5	0	1	48	OptiStart K-F-25-30-01-Z048	334711
	25	12,5	1	0	24	OptiStart K-F-25-30-10-Z024	334724
	25	12,5	1	0	48	OptiStart K-F-25-30-10-Z048	334725
	26	13	0	0	24	OptiStart K-F-26-30-00-Z024	334738
	26	13	0	0	48	OptiStart K-F-26-30-00-Z048	334739
	32	16	0	0	24	OptiStart K-F-32-30-00-Z024	334792
	32	16	0	0	48	OptiStart K-F-32-30-00-Z048	334793
	38	18,5	0	0	24	OptiStart K-F-38-30-00-Z024	334806
	38	18,5	0	0	48	OptiStart K-F-38-30-00-Z048	334807

Note: All contactor models F-09-...Z — F-38-...Z include a built-in surge arrester.
The list of possible accessories is limited. For more detailed information, see the «Delivery Package» section.

Three-pole series AF contactors with universal electronically-controlled AC/DC coils

Appearance	Rated current (AC-3, 400 V, ≤55 °C), A	Rated power (AC-3, 400 V, ≤55 °C), kW	Auxiliary contacts		Control coil rated voltage, V	Product name	Code
			NO	NC			
	40	18,5	0	0	24-60 V AC / 20-60 V DC	Optistart K-AF-40-30-00-E024	334955
	40	18,5	0	0	60-130 V AC/DC	Optistart K-AF-40-30-00-E110	334956
	40	18,5	0	0	100-250 V AC/DC	Optistart K-AF-40-30-00-E230	334957
	50	22	0	0	24-60 V AC / 20-60 V DC	Optistart K-AF-50-30-00-E024	334958
	50	22	0	0	60-130 V AC/DC	Optistart K-AF-50-30-00-E110	334959
	50	22	0	0	100-250 V AC/DC	Optistart K-AF-50-30-00-E230	334960
	65	30	0	0	24-60 V AC / 20-60 V DC	Optistart K-AF-65-30-00-E024	334961
	65	30	0	0	60-130 V AC/DC	Optistart K-AF-65-30-00-E110	334962
	65	30	0	0	100-250 V AC/DC	Optistart K-AF-65-30-00-E230	334963
	80	37	0	0	24-60 V AC / 20-60 V DC	Optistart K-AF-80-30-00-E024	334967
	80	37	0	0	60-130 V AC/DC	Optistart K-AF-80-30-00-E110	334968
	80	37	0	0	100-250 V AC/DC	Optistart K-AF-80-30-00-E230	334969
	94	45	0	0	24-60 V AC / 20-60 V DC	Optistart K-AF-94-30-00-E024	334976
	94	45	0	0	60-130 V AC/DC	Optistart K-AF-94-30-00-E110	334977
	94	45	0	0	100-250 V AC/DC	Optistart K-AF-94-30-00-E230	334978
	95	45	0	0	24-60 V AC / 20-60 V DC	OptiStart K-AF-95-30-00-E024	334891
	95	45	0	0	60-130 V AC/DC	OptiStart K-AF-95-30-00-E110	334892
	95	45	0	0	100-250 V AC/DC	OptiStart K-AF-95-30-00-E230	334893
	115	55	0	0	24-60 V AC / 20-60 V DC	OptiStart K-AF-115-30-00-E024	334907
	115	55	0	0	60-130 V AC/DC	OptiStart K-AF-115-30-00-E110	334908
	115	55	0	0	100-250 V AC/DC	OptiStart K-AF-115-30-00-E230	334909
	150	75	0	0	24-60 V AC / 20-60 V DC	OptiStart K-AF-150-30-00-E024	334920
	150	75	0	0	60-130 V AC/DC	OptiStart K-AF-150-30-00-E110	334921
	150	75	0	0	100-250 V AC/DC	OptiStart K-AF-150-30-00-E230	334922
	160	75	0	0	24-60 V AC / 20-60 V DC	OptiStart K-AF-160-30-00-E024	334931
	160	75	0	0	60-130 V AC/DC	OptiStart K-AF-160-30-00-E110	334932
	160	75	0	0	100-250 V AC/DC	OptiStart K-AF-160-30-00-E230	334933
	160	75	0	0	250-500 V AC/DC	OptiStart K-AF-160-30-00-E400	334934
	195	90	0	0	24-60 V AC / 20-60 V DC	OptiStart K-AF-195-30-00-E024	334939
	195	90	0	0	60-130 V AC/DC	OptiStart K-AF-195-30-00-E110	334940
	195	90	0	0	100-250 V AC/DC	OptiStart K-AF-195-30-00-E230	334941
	195	90	0	0	250-500 V AC/DC	OptiStart K-AF-195-30-00-E400	334942
	230	110	0	0	24-60 V AC / 20-60 V DC	OptiStart K-AF-230-30-00-E024	334947
	230	110	0	0	60-130 V AC/DC	OptiStart K-AF-230-30-00-E110	334948
	230	110	0	0	100-250 V AC/DC	OptiStart K-AF-230-30-00-E230	334949
	230	110	0	0	250-500 V AC/DC	OptiStart K-AF-230-30-00-E400	334950

Appearance	Rated current (AC-3, 400 V, ≤55 °C), A	Rated power (AC-3, 400 V, ≤55 °C), kW	Auxiliary contacts		Control coil rated voltage, V	Product name	Code
			NO	NC			
	265	132	0	0	24-60 V AC / 20-60 V DC	OptiStart K-AF-265-30-00-E024	370923
	265	132	0	0	60-130 V AC/DC	OptiStart K-AF-265-30-00-E110	370924
	265	132	0	0	100-250 V AC/DC	OptiStart K-AF-265-30-00-E230	370925
	265	132	0	0	250-500 V AC/DC	OptiStart K-AF-265-30-00-E400	370926
	330	160	0	0	24-60 V AC / 20-60 V DC	OptiStart K-AF-330-30-00-E024	370931
	330	160	0	0	60-130 V AC/DC	OptiStart K-AF-330-30-00-E110	370932
	330	160	0	0	100-250 V AC/DC	OptiStart K-AF-330-30-00-E230	370933
	330	160	0	0	250-500 V AC/DC	OptiStart K-AF-330-30-00-E400	370934
	400	200	0	0	24-60 V AC / 20-60 V DC	OptiStart K-AF-400-30-00-E024	370939
	400	200	0	0	60-130 V AC/DC	OptiStart K-AF-400-30-00-E110	370940
	400	200	0	0	100-250 V AC/DC	OptiStart K-AF-400-30-00-E230	370941
	400	200	0	0	250-500 V AC/DC	OptiStart K-AF-400-30-00-E400	370942

Three-pole series F contactors with universal AC/DC control coils

Appearance	Rated current (AC-3, 400 V, ≤55 °C), A	Rated power (AC-3, 400 V, ≤55 °C), kW	Auxiliary contacts		Control coil rated voltage, V	Product name	Code
			NO	NC			
	500	290	0	0	48	OptiStart K-F-500-30-00-U48	335094
	500	290	0	0	60	OptiStart K-F-500-30-00-U60	335095
	500	290	0	0	110	OptiStart K-F-500-30-00-U110	335090
	500	290	0	0	220	OptiStart K-F-500-30-00-U220	335091
	500	290	0	0	380	OptiStart K-F-500-30-00-U380	335092
	500	290	0	0	440	OptiStart K-F-500-30-00-U440	335093
	630	355	0	0	48	OptiStart K-F-630-30-00-U48	335112
	630	355	0	0	60	OptiStart K-F-630-30-00-U60	335113
	630	355	0	0	110	OptiStart K-F-630-30-00-U110	335108
	630	355	0	0	220	OptiStart K-F-630-30-00-U220	335109
	630	355	0	0	380	OptiStart K-F-630-30-00-U380	335110
	630	355	0	0	440	OptiStart K-F-630-30-00-U440	335111

Three-pole series F contactors designed for loads with utilization category AC-1 only

Appearance	Rated current (AC-1, 400 V, ≤40 °C), A	Auxiliary contacts		Control coil rated voltage, V	Product name	Code
		NO	NC			
	1000	0	0	48	OptiStart K-F-1000-30-00-U48	335118
	1000	0	0	60	OptiStart K-F-1000-30-00-U60	335119
	1000	0	0	110	OptiStart K-F-1000-30-00-U110	335114
	1000	0	0	220	OptiStart K-F-1000-30-00-U220	335115
	1000	0	0	380	OptiStart K-F-1000-30-00-U380	335116
	1000	0	0	440	OptiStart K-F-1000-30-00-U440	335117
	1250	2	4	110	OptiStart K-F-1250-30-24-A110	334979
	1250	2	4	220	OptiStart K-F-1250-30-24-A220	334980
	1250	4	2	110	OptiStart K-F-1250-30-42-A110	334981
	1250	4	2	220	OptiStart K-F-1250-30-42-A220	334982
	1250	2	4	110	OptiStart K-F-1600-30-24-A110	335004
	1250	2	4	220	OptiStart K-F-1600-30-24-A220	335005
	1250	4	2	110	OptiStart K-F-1600-30-42-A110	335006
	1250	4	2	220	OptiStart K-F-1600-30-42-A220	335007

Four-pole series F contactors with AC control coils

Appearance	Rated current (AC-3, 400 V, ≤55 °C), A	Rated current (AC-1, 400 V, ≤40 °C), A	Power contacts		Control coil rated voltage, V AC	Product name	Code
			NO	NC			
	09	25	2	2	24	OptiStart K-F-09-22-00-A024	334576
	09	25	2	2	48	OptiStart K-F-09-22-00-A048	334577
	09	25	2	2	110	OptiStart K-F-09-22-00-A110	334578
	09	25	2	2	230	OptiStart K-F-09-22-00-A230	334579
	09	25	2	2	400	OptiStart K-F-09-22-00-A400	334580
	09	25	4	0	24	OptiStart K-F-09-40-00-A024	334581
	09	25	4	0	48	OptiStart K-F-09-40-00-A048	334582
	09	25	4	0	110	OptiStart K-F-09-40-00-A110	334583
	09	25	4	0	230	OptiStart K-F-09-40-00-A230	334584
	09	25	4	0	400	OptiStart K-F-09-40-00-A400	334585
	12	28	4	0	24	OptiStart K-F-12-40-00-A024	334623
	12	28	4	0	48	OptiStart K-F-12-40-00-A048	334624
	12	28	4	0	110	OptiStart K-F-12-40-00-A110	334625
	12	28	4	0	230	OptiStart K-F-12-40-00-A230	334626
	12	28	4	0	400	OptiStart K-F-12-40-00-A400	334627
	18	32	0	4	24	OptiStart K-F-18-04-00-A024	334656
	18	32	0	4	48	OptiStart K-F-18-04-00-A048	334657
	18	32	0	4	110	OptiStart K-F-18-04-00-A110	334658
	18	32	0	4	230	OptiStart K-F-18-04-00-A230	334659
	18	32	0	4	400	OptiStart K-F-18-04-00-A400	334660
	18	32	2	2	24	OptiStart K-F-18-22-00-A024	334670
	18	32	2	2	48	OptiStart K-F-18-22-00-A048	334671
	18	32	2	2	110	OptiStart K-F-18-22-00-A110	334672
	18	32	2	2	230	OptiStart K-F-18-22-00-A230	334673
	18	32	2	2	400	OptiStart K-F-18-22-00-A400	334674
	18	32	4	0	24	OptiStart K-F-18-40-00-A024	334684
	18	32	4	0	48	OptiStart K-F-18-40-00-A048	334685
	18	32	4	0	110	OptiStart K-F-18-40-00-A110	334686
	18	32	4	0	230	OptiStart K-F-18-40-00-A230	334687
	18	32	4	0	400	OptiStart K-F-18-40-00-A400	334688
	26	45	0	4	24	OptiStart K-F-26-04-00-A024	334740
	26	45	0	4	48	OptiStart K-F-26-04-00-A048	334741
	26	45	0	4	110	OptiStart K-F-26-04-00-A110	334742
	26	45	0	4	230	OptiStart K-F-26-04-00-A230	334743
	26	45	0	4	400	OptiStart K-F-26-04-00-A400	334744
	26	45	2	2	24	OptiStart K-F-26-22-00-A024	334752
	26	45	2	2	48	OptiStart K-F-26-22-00-A048	334753
	26	45	2	2	110	OptiStart K-F-26-22-00-A110	334754
	26	45	2	2	230	OptiStart K-F-26-22-00-A230	334755
	26	45	2	2	400	OptiStart K-F-26-22-00-A400	334756
	26	45	4	0	24	OptiStart K-F-26-40-00-A024	334766
	26	45	4	0	48	OptiStart K-F-26-40-00-A048	334767
	26	45	4	0	110	OptiStart K-F-26-40-00-A110	334768
	26	45	4	0	230	OptiStart K-F-26-40-00-A230	334769
	26	45	4	0	400	OptiStart K-F-26-40-00-A400	334770
	38	56	2	2	24	OptiStart K-F-38-22-00-A024	334808
	38	56	2	2	48	OptiStart K-F-38-22-00-A048	334809
	38	56	2	2	110	OptiStart K-F-38-22-00-A110	334810
	38	56	2	2	230	OptiStart K-F-38-22-00-A230	334811
	38	56	2	2	400	OptiStart K-F-38-22-00-A400	334812
	38	56	4	0	24	OptiStart K-F-38-40-00-A024	334822
	38	56	4	0	48	OptiStart K-F-38-40-00-A048	334823
	38	56	4	0	110	OptiStart K-F-38-40-00-A110	334824
	38	56	4	0	230	OptiStart K-F-38-40-00-A230	334825
	38	56	4	0	400	OptiStart K-F-38-40-00-A400	334826
	40	70	4	0	24	OptiStart K-F-40-40-00-A024	334841
	40	70	4	0	48	OptiStart K-F-40-40-00-A048	334842
	40	70	4	0	110	OptiStart K-F-40-40-00-A110	334843
	40	70	4	0	230	OptiStart K-F-40-40-00-A230	334844
	40	70	4	0	400	OptiStart K-F-40-40-00-A400	334845
	50	90	4	0	24	OptiStart K-F-50-40-00-A024	334851
	50	90	4	0	48	OptiStart K-F-50-40-00-A048	334852
	50	90	4	0	110	OptiStart K-F-50-40-00-A110	334853
	50	90	4	0	230	OptiStart K-F-50-40-00-A230	334854
	50	90	4	0	400	OptiStart K-F-50-40-00-A400	334855

Appearance	Rated current (AC-3, 400 V, ≤55 °C), A	Rated current (AC-1, 400 V, ≤40 °C), A	Power contacts		Control coil rated voltage, V AC	Product name	Code
			NO	NC			
	65	100	4	0	24	OptiStart K-F-65-40-00-A024	334861
	65	100	4	0	48	OptiStart K-F-65-40-00-A048	334862
	65	100	4	0	110	OptiStart K-F-65-40-00-A110	334863
	65	100	4	0	230	OptiStart K-F-65-40-00-A230	334864
	65	100	4	0	400	OptiStart K-F-65-40-00-A400	334865
	80	115	2	2	24	OptiStart K-F-80-22-00-A024	334871
	80	115	2	2	48	OptiStart K-F-80-22-00-A048	334872
	80	115	2	2	110	OptiStart K-F-80-22-00-A110	334873
	80	115	2	2	230	OptiStart K-F-80-22-00-A230	334874
	80	115	2	2	400	OptiStart K-F-80-22-00-A400	334875
	80	115	4	0	24	OptiStart K-F-80-40-00-A024	334876
	80	115	4	0	48	OptiStart K-F-80-40-00-A048	334877
	80	115	4	0	110	OptiStart K-F-80-40-00-A110	334878
	80	115	4	0	230	OptiStart K-F-80-40-00-A230	334879
	80	115	4	0	400	OptiStart K-F-80-40-00-A400	334880
	95	140	4	0	24	OptiStart K-F-95-40-00-A024	334894
	95	140	4	0	48	OptiStart K-F-95-40-00-A048	334895
	95	140	4	0	110	OptiStart K-F-95-40-00-A110	334896
	95	140	4	0	230	OptiStart K-F-95-40-00-A230	334897
	95	140	4	0	400	OptiStart K-F-95-40-00-A400	334898
	115	160	4	0	24	OptiStart K-F-115-40-00-A024	334910
	115	160	4	0	48	OptiStart K-F-115-40-00-A048	334911
	115	160	4	0	110	OptiStart K-F-115-40-00-A110	334912
	115	160	4	0	230	OptiStart K-F-115-40-00-A230	334913
	115	160	4	0	400	OptiStart K-F-115-40-00-A400	334914
	150	165	4	0	24	OptiStart K-F-150-40-00-A024	334923
	150	165	4	0	48	OptiStart K-F-150-40-00-A048	334924
	150	165	4	0	110	OptiStart K-F-150-40-00-A110	334925
	150	165	4	0	230	OptiStart K-F-150-40-00-A230	334926
	150	165	4	0	400	OptiStart K-F-150-40-00-A400	334927

Four-pole series F contactors with DC control coils

Appearance	Rated current (AC-3, 400 V, ≤55 °C), A	Rated current (AC-1, 400 V, ≤40 °C), A	Power contacts		Control coil rated voltage, V DC	Product name	Code
			NO	NC			
	09	25	4	0	12	OptiStart K-F-09-40-00-D012	334586
	09	25	4	0	24	OptiStart K-F-09-40-00-D024	334587
	09	25	4	0	48	OptiStart K-F-09-40-00-D048	334588
	09	25	4	0	60	OptiStart K-F-09-40-00-D060	334589
	09	25	4	0	110	OptiStart K-F-09-40-00-D110	334590
	09	25	4	0	125	OptiStart K-F-09-40-00-D125	334591
	09	25	4	0	220	OptiStart K-F-09-40-00-D220	334592
	18	32	0	4	12	OptiStart K-F-18-04-00-D012	334661
	18	32	0	4	24	OptiStart K-F-18-04-00-D024	334662
	18	32	0	4	48	OptiStart K-F-18-04-00-D048	334663
	18	32	0	4	60	OptiStart K-F-18-04-00-D060	334664
	18	32	0	4	110	OptiStart K-F-18-04-00-D110	334665
	18	32	0	4	125	OptiStart K-F-18-04-00-D125	334666
	18	32	0	4	220	OptiStart K-F-18-04-00-D220	334667
	18	32	2	2	12	OptiStart K-F-18-22-00-D012	334675
	18	32	2	2	24	OptiStart K-F-18-22-00-D024	334676
	18	32	2	2	48	OptiStart K-F-18-22-00-D048	334677
	18	32	2	2	60	OptiStart K-F-18-22-00-D060	334678
	18	32	2	2	110	OptiStart K-F-18-22-00-D110	334679
	18	32	2	2	125	OptiStart K-F-18-22-00-D125	334680
	18	32	2	2	220	OptiStart K-F-18-22-00-D220	334681
	18	32	4	0	12	OptiStart K-F-18-40-00-D012	334689
	18	32	4	0	24	OptiStart K-F-18-40-00-D024	334690
	18	32	4	0	48	OptiStart K-F-18-40-00-D048	334691
	18	32	4	0	60	OptiStart K-F-18-40-00-D060	334692
	18	32	4	0	110	OptiStart K-F-18-40-00-D110	334693
	18	32	4	0	125	OptiStart K-F-18-40-00-D125	334694
	18	32	4	0	220	OptiStart K-F-18-40-00-D220	334695

Appearance	Rated current (AC-3, 400 V, ≤55 °C), A	Rated current (AC-1, 400 V, ≤40 °C), A	Power contacts		Control coil rated voltage, V DC	Product name	Code
			NO	NC			
	26	45	0	4	12	OptiStart K-F-26-04-00-D012	334745
	26	45	0	4	24	OptiStart K-F-26-04-00-D024	334746
	26	45	0	4	48	OptiStart K-F-26-04-00-D048	334747
	26	45	0	4	60	OptiStart K-F-26-04-00-D060	334748
	26	45	0	4	110	OptiStart K-F-26-04-00-D110	334749
	26	45	0	4	125	OptiStart K-F-26-04-00-D125	334750
	26	45	0	4	220	OptiStart K-F-26-04-00-D220	334751
	26	45	2	2	12	OptiStart K-F-26-22-00-D012	334757
	26	45	2	2	24	OptiStart K-F-26-22-00-D024	334758
	26	45	2	2	48	OptiStart K-F-26-22-00-D048	334759
	26	45	2	2	60	OptiStart K-F-26-22-00-D060	334760
	26	45	2	2	110	OptiStart K-F-26-22-00-D110	334761
	26	45	2	2	125	OptiStart K-F-26-22-00-D125	334762
	26	45	2	2	220	OptiStart K-F-26-22-00-D220	334763
	26	45	4	0	12	OptiStart K-F-26-40-00-D012	334771
	26	45	4	0	24	OptiStart K-F-26-40-00-D024	334772
	26	45	4	0	48	OptiStart K-F-26-40-00-D048	334773
	26	45	4	0	60	OptiStart K-F-26-40-00-D060	334774
	26	45	4	0	110	OptiStart K-F-26-40-00-D110	334775
	26	45	4	0	125	OptiStart K-F-26-40-00-D125	334776
	26	45	4	0	220	OptiStart K-F-26-40-00-D220	334777
	38	56	2	2	12	OptiStart K-F-38-22-00-D012	334813
	38	56	2	2	24	OptiStart K-F-38-22-00-D024	334814
	38	56	2	2	48	OptiStart K-F-38-22-00-D048	334815
	38	56	2	2	60	OptiStart K-F-38-22-00-D060	334816
	38	56	2	2	110	OptiStart K-F-38-22-00-D110	334817
	38	56	2	2	125	OptiStart K-F-38-22-00-D125	334818
	38	56	2	2	220	OptiStart K-F-38-22-00-D220	334819
	38	56	4	0	12	OptiStart K-F-38-40-00-D012	334827
	38	56	4	0	24	OptiStart K-F-38-40-00-D024	334828
	38	56	4	0	48	OptiStart K-F-38-40-00-D048	334829
	38	56	4	0	60	OptiStart K-F-38-40-00-D060	334830
	38	56	4	0	110	OptiStart K-F-38-40-00-D110	334831
	38	56	4	0	125	OptiStart K-F-38-40-00-D125	334832
	38	56	4	0	220	OptiStart K-F-38-40-00-D220	334833

Note: All contactor models F-09-...D - F-38-...D include a built-in surge arrester.

Four-pole series F contactors with DC control coil and reduced power consumption (-Z)

Appearance	Rated current (AC-3, 400 V, ≤55 °C), A	Rated current (AC-1, 400 V, ≤40 °C), A	Power contacts		Control coil rated voltage, V DC	Product name	Code
			NO	NC			
	09	25	4	0	24	OptiStart K-F-09-40-00-Z024	334593
	09	25	4	0	48	OptiStart K-F-09-40-00-Z048	334594
	18	32	0	4	12	OptiStart K-F-18-04-00-Z012	334668
	18	32	0	4	24	OptiStart K-F-18-04-00-Z024	334669
	18	32	2	2	24	OptiStart K-F-18-22-00-Z024	334682
	18	32	2	2	48	OptiStart K-F-18-22-00-Z048	334683
	18	32	4	0	24	OptiStart K-F-18-40-00-Z024	334696
	18	32	4	0	48	OptiStart K-F-18-40-00-Z048	334697
	26	45	2	2	24	OptiStart K-F-26-22-00-Z024	334764
	26	45	2	2	48	OptiStart K-F-26-22-00-Z048	334765
	26	45	4	0	24	OptiStart K-F-26-40-00-Z024	334778
	26	45	4	0	48	OptiStart K-F-26-40-00-Z048	334779
	38	56	2	2	24	OptiStart K-F-38-22-00-Z024	334820
	38	56	2	2	48	OptiStart K-F-38-22-00-Z048	334821
	38	56	4	0	24	OptiStart K-F-38-40-00-Z024	334834
	38	56	4	0	48	OptiStart K-F-38-40-00-Z048	334835

Note: All contactor models F-09-...Z — F-38-...Z include a built-in surge arrester.
The list of possible accessories is limited. For more detailed information, see the «Delivery package» section.

Four-pole series AF contactors with universal electronically-controlled AC/DC coils

Appearance	Rated current (AC-3, 400 V, ≤55 °C), A	Rated current (AC-1, 400 V, ≤40 °C), A	Power contacts		Control coil rated voltage	Product name	Code
			NO	NC			
	65	100	4	0	24–60 V AC / 20–60 V DC	OptiStart K-AF-65-40-00-E024	334964
	65	100	4	0	60–130 V AC/DC	OptiStart K-AF-65-40-00-E110	334965
	65	100	4	0	100–250 V AC/DC	OptiStart K-AF-65-40-00-E230	334966
	80	115	2	2	24–60 V AC / 20–60 V DC	OptiStart K-AF-80-22-00-E024	334970
	80	115	2	2	60–130 V AC/DC	OptiStart K-AF-80-22-00-E110	334971
	80	115	2	2	100–250 V AC/DC	OptiStart K-AF-80-22-00-E230	334972
	80	115	4	0	24–60 V AC / 20–60 V DC	OptiStart K-AF-80-40-00-E024	334973
	80	115	4	0	60–130 V AC/DC	OptiStart K-AF-80-40-00-E110	334974
	80	115	4	0	100–250 V AC/DC	OptiStart K-AF-80-40-00-E230	334975
	95	140	4	0	24–60 V AC / 20–60 V DC	OptiStart K-AF-95-40-00-E024	334899
	95	140	4	0	60–130 V AC/DC	OptiStart K-AF-95-40-00-E110	334900
	95	140	4	0	100–250 V AC/DC	OptiStart K-AF-95-40-00-E230	334901
	150	165	4	0	24–60 V AC / 20–60 V DC	OptiStart K-AF-150-40-00-E024	334928
	150	165	4	0	60–130 V AC/DC	OptiStart K-AF-150-40-00-E110	334929
	150	165	4	0	100–250 V AC/DC	OptiStart K-AF-150-40-00-E230	334930
	160	250	4	0	24–60 V AC / 20–60 V DC	OptiStart K-AF-160-40-00-E024	334935
	160	250	4	0	60–130 V AC/DC	OptiStart K-AF-160-40-00-E110	334936
	160	250	4	0	100–250 V AC/DC	OptiStart K-AF-160-40-00-E230	334937
	160	250	4	0	250–500 V AC/DC	OptiStart K-AF-160-40-00-E400	334938
	195	275	4	0	24–60 V AC / 20–60 V DC	OptiStart K-AF-195-40-00-E024	334943
	195	275	4	0	60–130 V AC/DC	OptiStart K-AF-195-40-00-E110	334944
	195	275	4	0	100–250 V AC/DC	OptiStart K-AF-195-40-00-E230	334945
	195	275	4	0	250–500 V AC/DC	OptiStart K-AF-195-40-00-E400	334946
	230	350	4	0	24–60 V AC / 20–60 V DC	OptiStart K-AF-230-40-00-E024	334951
	230	350	4	0	60–130 V AC/DC	OptiStart K-AF-230-40-00-E110	334952
	230	350	4	0	100–250 V AC/DC	OptiStart K-AF-230-40-00-E230	334953
	230	350	4	0	250–500 V AC/DC	OptiStart K-AF-230-40-00-E400	334954
	265	132	4	0	24-60 V AC / 20-60 V DC	OptiStart K-AF-265-40-00-E024	370927
	265	132	4	0	60-130 V AC/DC	OptiStart K-AF-265-40-00-E110	370928
	265	132	4	0	100-250 V AC/DC	OptiStart K-AF-265-40-00-E230	370929
	265	132	4	0	250-500 V AC/DC	OptiStart K-AF-265-40-00-E400	370930
	330	160	4	0	24-60 V AC / 20-60 V DC	OptiStart K-AF-330-40-00-E024	370935
	330	160	4	0	60-130 V AC/DC	OptiStart K-AF-330-40-00-E110	370936
	330	160	4	0	100-250 V AC/DC	OptiStart K-AF-330-40-00-E230	370937
	330	160	4	0	250-500 V AC/DC	OptiStart K-AF-330-40-00-E400	370938
	400	200	4	0	24-60 V AC / 20-60 V DC	OptiStart K-AF-400-40-00-E024	370943
	400	200	4	0	60-130 V AC/DC	OptiStart K-AF-400-40-00-E110	370944
	400	200	4	0	100-250 V AC/DC	OptiStart K-AF-400-40-00-E230	370945
	400	200	4	0	250-500 V AC/DC	OptiStart K-AF-400-40-00-E400	370946

Four-pole series F contactors with universal AC/DC coils

Appearance	Rated current (AC-3, 400 V, ≤55 °C), A	Rated current (AC-1, 400 V, ≤40 °C), A	Power contacts		Control coil rated voltage, V	Product name	Code
			NO	NC			
	500	700	0	0	48	OptiStart K-F-500-40-00-U48	335100
	500	700	0	0	60	OptiStart K-F-500-40-00-U60	335101
	500	700	0	0	110	OptiStart K-F-500-40-00-U110	335096
	500	700	0	0	220	OptiStart K-F-500-40-00-U220	335097
	500	700	0	0	380	OptiStart K-F-500-40-00-U380	335098
	500	700	0	0	440	OptiStart K-F-500-40-00-U440	335099
	630	800	0	0	48	OptiStart K-F-630-40-00-U48	335130
	630	800	0	0	60	OptiStart K-F-630-40-00-U60	335131
	630	800	0	0	110	OptiStart K-F-630-40-00-U110	335126
	630	800	0	0	220	OptiStart K-F-630-40-00-U220	335127
	630	800	0	0	380	OptiStart K-F-630-40-00-U380	335128
	630	800	0	0	440	OptiStart K-F-630-40-00-U440	335129

Four-pole series F contactors designed for loads with utilization category AC-1 only

Appearance	Rated current (AC-1, 400 V, ≤ 40 °C), A	Power contacts		Control coil rated voltage, V	Product name	Code
		NO	NC			
	1000	0	0	48	OptiStart K-F-1000-40-00-U48	335124
	1000	0	0	60	OptiStart K-F-1000-40-00-U60	335125
	1000	0	0	110	OptiStart K-F-1000-40-00-U110	335120
	1000	0	0	220	OptiStart K-F-1000-40-00-U220	335121
	1000	0	0	380	OptiStart K-F-1000-40-00-U380	335122
	1000	0	0	440	OptiStart K-F-1000-40-00-U440	335123

Three-pole series FD contactors for capacitor switching with AC control coils

Appearance	Maximum power (AC-6b, ≤50 °C), kVAr		Auxiliary contacts		Control coil rated voltage, V	Product name	Code
	400 В	690 В	NO	NC			
	7,5	10	1	0	24	OptiStart K-FK-09-30-10-A024	335453
	7,5	10	1	0	48	OptiStart K-FK-09-30-10-A048	335454
	7,5	10	1	0	110	OptiStart K-FK-09-30-10-A110	335455
	7,5	10	1	0	230	OptiStart K-FK-09-30-10-A230	335456
	7,5	10	1	0	400	OptiStart K-FK-09-30-10-A400	335457
	12,5	16	1	0	24	OptiStart K-FK-12-30-10-A024	335458
	12,5	16	1	0	48	OptiStart K-FK-12-30-10-A048	335459
	12,5	16	1	0	110	OptiStart K-FK-12-30-10-A110	335460
	12,5	16	1	0	230	OptiStart K-FK-12-30-10-A230	335461
	12,5	16	1	0	400	OptiStart K-FK-12-30-10-A400	335462
	15	20	1	0	24	OptiStart K-FK-18-30-10-A024	335463
	15	20	1	0	48	OptiStart K-FK-18-30-10-A048	335464
	15	20	1	0	110	OptiStart K-FK-18-30-10-A110	335465
	15	20	1	0	230	OptiStart K-FK-18-30-10-A230	335466
	15	20	1	0	400	OptiStart K-FK-18-30-10-A400	335467
	20	25	0	0	24	OptiStart K-FK-26-30-00-A024	335468
	20	25	0	0	48	OptiStart K-FK-26-30-00-A048	335469
	20	25	0	0	110	OptiStart K-FK-26-30-00-A110	335470
	20	25	0	0	230	OptiStart K-FK-26-30-00-A230	335471
	20	25	0	0	400	OptiStart K-FK-26-30-00-A400	335472
	25	30	0	0	24	OptiStart K-FK-32-30-00-A024	335473
	25	30	0	0	48	OptiStart K-FK-32-30-00-A048	335474
	25	30	0	0	110	OptiStart K-FK-32-30-00-A110	335475
	25	30	0	0	230	OptiStart K-FK-32-30-00-A230	335476
	25	30	0	0	400	OptiStart K-FK-32-30-00-A400	335477
	30	36	0	0	24	OptiStart K-FK-38-30-00-A024	335478
	30	36	0	0	48	OptiStart K-FK-38-30-00-A048	335479
	30	36	0	0	110	OptiStart K-FK-38-30-00-A110	335480
	30	36	0	0	230	OptiStart K-FK-38-30-00-A230	335481
	30	36	0	0	400	OptiStart K-FK-38-30-00-A400	335482
	40	46	0	0	24	OptiStart K-FK-50-30-00-A024	335483
	40	46	0	0	48	OptiStart K-FK-50-30-00-A048	335484
	40	46	0	0	110	OptiStart K-FK-50-30-00-A110	335485
	40	46	0	0	230	OptiStart K-FK-50-30-00-A230	335486
	40	46	0	0	400	OptiStart K-FK-50-30-00-A400	335487
	45	56	0	0	24	OptiStart K-FK-65-30-00-A024	335488
	45	56	0	0	48	OptiStart K-FK-65-30-00-A048	335489
	45	56	0	0	110	OptiStart K-FK-65-30-00-A110	335490
	45	56	0	0	230	OptiStart K-FK-65-30-00-A230	335491
	45	56	0	0	400	OptiStart K-FK-65-30-00-A400	335492
	50	65	0	0	24	OptiStart K-FK-80-30-00-A024	335493
	50	65	0	0	48	OptiStart K-FK-80-30-00-A048	335494
	50	65	0	0	110	OptiStart K-FK-80-30-00-A110	335495
	50	65	0	0	230	OptiStart K-FK-80-30-00-A230	335496
	50	65	0	0	400	OptiStart K-FK-80-30-00-A400	335497
	60	80	0	0	24	OptiStart K-FK-94-30-00-A024	335498
	60	80	0	0	48	OptiStart K-FK-94-30-00-A048	335499
	60	80	0	0	110	OptiStart K-FK-94-30-00-A110	335500
	60	80	0	0	230	OptiStart K-FK-94-30-00-A230	335501
	60	80	0	0	400	OptiStart K-FK-94-30-00-A400	335502

Appearance	Maximum power (AC-6b, ≤50 °C), kVAr		Auxiliary contacts		Control coil rated voltage, V	Product name	Code
	400 B	690 B	NO	NC			
	60	80	0	0	24	OptiStart K-FK-95-30-00-A024	335503
	60	80	0	0	48	OptiStart K-FK-95-30-00-A048	335504
	60	80	0	0	110	OptiStart K-FK-95-30-00-A110	335505
	60	80	0	0	230	OptiStart K-FK-95-30-00-A230	335506
	60	80	0	0	400	OptiStart K-FK-95-30-00-A400	335507
	75	135	0	0	24	OptiStart K-FK-115-30-00-A024	335508
	75	135	0	0	48	OptiStart K-FK-115-30-00-A048	335509
	75	135	0	0	110	OptiStart K-FK-115-30-00-A110	335510
	75	135	0	0	230	OptiStart K-FK-115-30-00-A230	335511
	75	135	0	0	400	OptiStart K-FK-115-30-00-A400	335512
	100	150	0	0	24	OptiStart K-FK-150-30-00-A024	335513
	100	150	0	0	48	OptiStart K-FK-150-30-00-A048	335514
	100	150	0	0	110	OptiStart K-FK-150-30-00-A110	335515
	100	150	0	0	230	OptiStart K-FK-150-30-00-A230	335516
	100	150	0	0	400	OptiStart K-FK-150-30-00-A400	335517

The following auxiliary contacts can be installed on series FK contactors: FX-12..., FX-418..., FX-481..., FX-482... and FX-218.

DC switching contactors

Series FD contactors have special design with permanent magnets in the arc control zone, which allows switching loads at increased DC voltage. Only used when the characteristics of the standard OptiStart K DC contactors (see DC contactor selection table) are not sufficient.

Three-pole series FD contactors for DC switching with AC control coils

Appearance	Rated current (DC-1, ≤55 °C) with 3 poles connected in series, A		Auxiliary contacts		Control coil rated voltage, V	Product name	Code
	600 V	1000 V	NO	NC			
	75	35	0	0	24	OptiStart K-FD-65-30-00-A024	335432
	75	35	0	0	48	OptiStart K-FD-65-30-00-A048	335433
	75	35	0	0	110	OptiStart K-FD-65-30-00-A110	335434
	75	35	0	0	230	OptiStart K-FD-65-30-00-A230	335435
	75	35	0	0	400	OptiStart K-FD-65-30-00-A400	335436
	80	60	0	0	24	OptiStart K-FD-80-30-00-A024	335437
	80	60	0	0	48	OptiStart K-FD-80-30-00-A048	335438
	80	60	0	0	110	OptiStart K-FD-80-30-00-A110	335439
	80	60	0	0	230	OptiStart K-FD-80-30-00-A230	335440
	80	60	0	0	400	OptiStart K-FD-80-30-00-A400	335441

Series FD four-pole contactors for DC switching with AC control coils

Appearance	Rated current (DC-1, ≤55 °C) with 4 poles connected in series, A		Power contacts		Control coil rated voltage, V	Product name	Code
	600 V	1000 V	NO	NC			
	100	80	4	0	24	OptiStart K-FD-80-40-00-A024	335442
	100	80	4	0	48	OptiStart K-FD-80-40-00-A048	335443
	100	80	4	0	110	OptiStart K-FD-80-40-00-A110	335444
	100	80	4	0	230	OptiStart K-FD-80-40-00-A230	335445
	100	80	4	0	400	OptiStart K-FD-80-40-00-A400	335446

Series FD four-pole contactors with universal electronically-controlled AC/DC coils

Appearance	Rated current (DC-1, ≤55 °C) with 4 poles connected in series, A		Power contacts		Control coil rated voltage, V	Product name	Code
	600 B	1000 B	NO	NC			
	100	80	4	0	20–48 V AC/DC	OptiStart K-FD-80-40-00-E024	335447
	100	80	4	0	60–110 V AC/DC	OptiStart K-FD-80-40-00-E110	335448
	100	80	4	0	100–250 V AC/DC	OptiStart K-FD-80-40-00-E230	335449
	165	100	4	0	20–48 V AC/DC	OptiStart K-FD-150-40-00-E024	335450
	165	100	4	0	60–110 V AC/DC	OptiStart K-FD-150-40-00-E110	335451
	165	100	4	0	100–250 V AC/DC	OptiStart K-FD-150-40-00-E230	335452

Series FR contactor relays

Series FR contactor relays with AC control coils

Appearance	Main contacts		Control coil rated voltage, V AC	Product name	Code
	NO	NC			
	0	4	024	Optistart K-FR-04-A024	335201
	0	4	048	Optistart K-FR-04-A048	335202
	0	4	110	Optistart K-FR-04-A110	335203
	0	4	230	Optistart K-FR-04-A230	335204
	0	4	400	Optistart K-FR-04-A400	335205
	2	2	024	Optistart K-FR-22-A024	335206
	2	2	048	Optistart K-FR-22-A048	335207
	2	2	110	Optistart K-FR-22-A110	335208
	2	2	230	Optistart K-FR-22-A230	335209
	2	2	400	Optistart K-FR-22-A400	335210
	3	1	024	Optistart K-FR-31-A024	335211
	3	1	048	Optistart K-FR-31-A048	335212
	3	1	110	Optistart K-FR-31-A110	335213
	3	1	230	Optistart K-FR-31-A230	335214
	3	1	400	Optistart K-FR-31-A400	335215
	4	0	024	Optistart K-FR-40-A024	335216
	4	0	048	Optistart K-FR-40-A048	335217
	4	0	110	Optistart K-FR-40-A110	335218
	4	0	230	Optistart K-FR-40-A230	335219
	4	0	400	Optistart K-FR-40-A400	335220

Series FR contactor relays with DC control coils

Appearance	Main contacts		Control coil rated voltage, V AC	Product name	Code
	NO	NC			
	0	4	012	Optistart K-FR-04-D012	335221
	0	4	024	Optistart K-FR-04-D024	335222
	0	4	048	Optistart K-FR-04-D048	335223
	0	4	060	Optistart K-FR-04-D060	335224
	0	4	110	Optistart K-FR-04-D110	335225
	0	4	125	Optistart K-FR-04-D125	335226
	0	4	220	Optistart K-FR-04-D220	335227
	2	2	012	Optistart K-FR-22-D012	335230
	2	2	024	Optistart K-FR-22-D024	335231
	2	2	048	Optistart K-FR-22-D048	335232
	2	2	060	Optistart K-FR-22-D060	335233
	2	2	110	Optistart K-FR-22-D110	335234
	2	2	125	Optistart K-FR-22-D125	335235
	2	2	220	Optistart K-FR-22-D220	335236
	3	1	012	Optistart K-FR-31-D012	335239
	3	1	024	Optistart K-FR-31-D024	335240
	3	1	048	Optistart K-FR-31-D048	335241
	3	1	060	Optistart K-FR-31-D060	335242
	3	1	110	Optistart K-FR-31-D110	335243
	3	1	125	Optistart K-FR-31-D125	335244
	3	1	220	Optistart K-FR-31-D220	335245
	4	0	012	Optistart K-FR-40-D012	335248
	4	0	024	Optistart K-FR-40-D024	335249
	4	0	048	Optistart K-FR-40-D048	335250
	4	0	060	Optistart K-FR-40-D060	335251
	4	0	110	Optistart K-FR-40-D110	335252
	4	0	125	Optistart K-FR-40-D125	335253
	4	0	220	Optistart K-FR-40-D220	335254

Series FR contactor relays with DC control coil and reduced power consumption (-Z)

Appearance	Main contacts		Control coil rated voltage, V AC	Product name	Code
	NO	NC			
	0	4	024	OptiStart K-FR-04-Z024	335228
	0	4	048	OptiStart K-FR-04-Z048	335229
	2	2	024	OptiStart K-FR-22-Z024	335237
	2	2	048	OptiStart K-FR-22-Z048	335238
	3	1	024	OptiStart K-FR-31-Z024	335246
	3	1	048	OptiStart K-FR-31-Z048	335247
	4	0	024	OptiStart K-FR-40-Z024	335255
	4	0	048	OptiStart K-FR-40-Z048	335256

Technical specification

Contactors F-09...F-38 and contactor relays FR

Type			FR	F-09	F-12	F-18	F-25	F-26	F-32	F-38
Specifications of power poles										
Number of power poles, pcs.			4	3–4	3–4	3–4	3	3–4	3	3–4
Rated insulation voltage Ui, V			690							
Rated pulse withstand voltage Uimp, kV			6							
Operating frequency, Hz			25...400 (1)							
Operating current, A	Outdoor thermal stability current Ith (AC-1) at	≤40 °C	see data in table below	25	28	32	32	45	56	56/60 (5)
		≤55 °C	––	20	23	26	26	36	45	45/48 (5)
		≤70 °C	––	18	20	23	23	32	40	40/42 (5)
	AC-3 (≤440 V ≤55 °C)		––	9	12	18	25	26	32	38
	AC-4 (400 V) (2)		––	4,9	7,9	8,5	10	11,5	13,5	15,5
Rated short-time withstand current Icw 10 s, A (IEC/EN/BS 60947-1)			––	150	150	200	200	210	320	320
Rated fuse current for short-circuit protection at 400V/50 kA, A		gG	––	25	32	32	50	50	63	63
		aM	––	10	12	20	25	32	32	40
Rated making capacity (effective value), A			––	90	120	180	250	260	320	380
Rated breaking capacity, A		≤440 V	––	72	96	144	200	208	256	304
		500 V	––	72	96	120	184	184	240	240
		690 V	––	71	94	94	102	168	192	192
Resistance, mOhm, and heat dissipation, W, per pole	R	mOhm	––	2,5	2,5	2,5	2,5	2	2	2
	I_{th}	W	––	1,6	2	2,6	2,6	4	6	6
	AC-3	W	––	0,2	0,4	0,8	1,6	1,4	2	2,9
Specifications of connections										
	Type		Screw with washer							
	A		8,3	9,5	9,5	9,5	9,5	13	13	13
	B		3,5	4,5	4,5	4,5	4,5	5,5	5,5	5,5
	Screw		M3,5	M3,5	M3,5	M3,5	M3,5	M4	M4	M4
	Screwdriver type		PH 2	PH 2	PH 2	PH 2	PH 2	PH 2	PH 2	PH 2
Min - max tightening torque of power pole terminals, Nm			1,5–1,8	1,5–1,8	1,5–1,8	1,5–1,8	1,5–1,8	2,5–3,0	2,5–3,0	2,5–3,0
Min - max tightening torque of coil terminals, Nm			0,8–1,0	0,8–1,0	0,8–1,0	0,8–1,0	0,8–1,0	0,8–1,0	0,8–1,0	0,8–1,0
Screwdriver type			PH 2	PH 2	PH 2	PH 2	PH 2	PH 2	PH 2	PH 2
Cross-section of conductors (1 or 2 conductors), min. ... max, mm²	flexible conductors without lugs		1...6	1...6	1...6	1...6	1...6	2.5...16	2.5...16	2.5...16
	flexible conductors with lugs		1...4	1...4	1...4	1...4	1...4	1...10	1...10	1...10
	flexible conductors with fork-type lugs		1...4	1...4	1...4	1...4	1...4	1...10	1...10	1...10
Power terminals protection degree as per IEC/EN/BS 60529			IP20 (3)	IP20 (3)	IP20 (3)	IP20 (3)	IP20 (3)	IP20 (4)	IP20 (4)	IP20 (4)
Specifications of built-in auxiliary contacts										
Contactor types, pcs.			Depending on configuration	1 NO or 1 NC depending on configuration (6)				––		
Conditional thermal current I_{th}, A			10					––		
Specifications as per IEC/EN/BS 60947-5-1		AC	A600					––		
		DC	P600					––		
Operating conditions										
Ambient temperature, °C	at operation		-50...+70							
	during storage		-60...+80							
Maximum height above sea level, m			3000							
Installation position	rated		In a vertical plane							
	permissible		± 30°							
Mounting method			Screw or on 35 mm din-rail							

(1) At frequencies above 60 Hz with derating.
(2) For AC-4 utilization category, the switching life is reduced down to 200 thous. cycles
(3) Protection degree IP20 is provided for devices connected by conductors with a cross-section of at least 1 mm²
(4) Protection degree IP20 on the front side
(5) Increased current is only permissible when connecting a 16 mm2 cable with a fork-type lug
(6) Mechanical characteristics correspond to the data for power poles

Type			FR	F-09	F-12	F-18	F-25	F-26	F-32	F-38
Specifications of magnetic system										
AC control coil										
Rated voltage at 50/60 Hz, V			12...600							
Control coil rated voltage ranges, % U_s										
Coil with 50/60 Hz supply frequency	50 Hz	closure	80...110							
		opening	20...55							
	60 Hz	closure	80...110	85...110						
		opening	20...55							
Average power consumption at 20 °C, VA										
Coil with 50/60 Hz supply frequency	50 Hz	switching	75							
		retention	9							
	60 Hz	switching	70							
		retention	6,5							
Heat dissipation at ≤20 °C 50 Hz, W			2,5							
DC control coil										
Rated voltage, V			6...415							
Control coil rated voltage ranges, % U_s										
Closure	three-pole version		--	70...125						
	four-pole version		70...125					80...125		
	three- and four-pole versions with reduced consumption (..Z)		80...110							
Opening	all versions		10...40							
Average power consumption at 20 °C, W (switching / retention)		DC coil	5,4							
		Version - Z	2,4							
Время срабатывания										
Average time upon rated voltage control U_s, ms	AC control coil	closure NO	8...24					8...24		
		opening NO	10...20					5...15		
		closure NC	14...28 (1)					9...20 (2)		
		opening NC	7...18 (1)					9...17 (2)		
	DC control coil	closure NO	54...66					53...65		
		opening NO	14...17					14...18		
		closure NC	24...30 (3)					23...28		
		opening NC	47...57 (3)					46...56		
	DC control coil with reduced power consumption (version — Z)	closure NO	75...91					76...92		
		opening NO	15...19					16...20		
		closure NC	24...300 (4)					25...31		
		opening NC	67...810 (4)					63...77		
Wear resistance, mln cycles										
Mechanical			20	20	20	20	20	20	20	20
Electrical (Ie at 400 V AC-3)			2	2	2	1,6	1,2	1,6	1,6	1,4
Maximum switching frequency, cycle/h			3600							

(1) The closing time of contactors with 4 NC power poles and AC control coil is 9...25 ms; the opening time of NC contacts is 9...15 ms.
(2) The closing time of contactors with 4 NC power poles and AC control coil is 11...29 ms; the opening time of NC contacts is 6...14 ms.
(3) The closing time of contactors and contactor relays with 4 NC poles and DC control coil is 23...29 ms; the opening time of NC contacts is 40...49 ms.
(4) The closing time of contactors and contactor relays with 4 NC poles and DC control coil with reduced consumption (..Z) is 25...31 ms; the opening time of NC contacts is 56...68 ms.

Electrical characteristics of built-in auxiliary contacts and series FR contactor relays as per IEC/EN/BS 60947-5-1

Designation	Utilization category as per IEC/EN	Enclosed thermal current I_{the}	Rated operating current, A, at rated operating voltage U_e										Rated power VA, max	
			120 V AC		240 V AC		380 V AC		480 V AC		600 V AC			
Alternating current, A		[A]	Closure	Opening	Closure	Opening	Closure	Opening	Closure	Opening	Closure	Opening	Closure	Opening
A600	AC-15	10	60	6	30	3	19	1,9	15	1,5	12	1,2	7200	720
Direct current			Maximum direct current upon closure and opening										W max	
			125 V DC	250 V DC	301 V DC	400 V DC	500 V DC	600 V DC					300 V or less	
P600	DC-13	5	1,1	0,55	0,2	0,31	0,27	0,2					138	138

Contactors (A)F-40...(A)F-150

Type			(A)F-40	(A)F-50	(A)F-65	(A)F-80	(A)F-94	(A)F-95	(A)F-115	(A)F-150
Specifications of power poles										
Number of power poles, pcs.			3–4	3–4	3–4	3–4	3	3–4	3–4	3–4
Rated insulation voltage U_i, V			1000							
Rated pulse withstand voltage U_{imp}, kV			8							
Operating frequency, Hz			25...400 (1)							
Operating current, A	Outdoor thermal stability current Ith (AC-1) at	≤40 °C	70	90	100	115	115	140	160	165
		≤55 °C	60	75	80	95	95	115	130	135
		≤70 °C	50	65	70	80	80	100	115	118
	AC-3 (≤440 V ≤55 °C)		40	50	65	80	95	95	115	150
	AC-4 (400 V) (2)		24	28	31	38	45	45	54	70
Rated short-time withstand current I_{cw} 10 s, A (IEC/EN/BS 60947-1)			400	400	640	640	640	760	920	1200
Rated fuse current for short-circuit protection at 400 V / 50 kA, A		gG	100	100	125	125	125	160	200	250
		aM	50	50	80	80	100	100	125	160
Rated making capacity (effective value), A			400	500	650	800	950	1200	1500	1500
Rated breaking capacity, A		≤440 V	320	400	520	640	760	1100	1200	1200
		500 V	265	352	425	625	660	775	850	1025
		690 V	256	312	376	456	475	745	905	905
Resistance, mOhm, and heat dissipation, W, per pole	R	mOhm	0,8	0,8	0,8	0,6	0,6	0,45	0,45	0,45
	I_{th}	W	3,9	6,5	8	7,9	7,9	8,8	11,5	12
	AC-3	W	1,3	2	3,4	3,8	5,4	4,1	6	10,1
Specifications of connections										
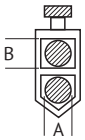		Type	Double screw terminal							
		A	9,5					15		
		B	11					14,5		
		Screw	M6					M8		
		Hexagon size	4					4		
Min – max tightening torque of power pole terminals, Nm			4...5					6...7		
Min – max tightening torque of coil terminals, Nm			0,8–1,0							
Screwdriver type			PH 2							
Cross-section of conductors (1 or 2 conductors), min ... max, mm²	flexible conductors without lugs		1,5...35					1,5...70		
	flexible conductors with lugs		1,5...35					1,5...70		
Power terminals protection degree as per IEC/EN/BS 60529			IP20 from the front side							
Operating conditions										
Ambient temperature, °C	during operation		Series F: -50...+70 Series AF: -40...+70							
	during storage		Series F: -60...+80 Series AF: -50...+80							
Maximum height above sea level, m			3000							
Installation position		rated	In a vertical plane							
		permissible	± 30°							
Mounting method			Screw or on 35 mm din-rail					Screw or on 35 mm din-rail, 15 mm high (TH35-15)		

(1) At frequencies above 60 Hz with derating.
(2) For utilization category AC-4, the switching life is reduced down to 200 thous, cycles.

Type			(A)F-40	(A)F-50	(A)F-65	(A)F-80	(A)F-94	(A)F-95	(A)F-115	(A)F-150
Specifications of magnetic system										
AC control coil / AC supply for series AF										
Rated voltage at 50/60 Hz, V			Series F: 12...600 Series AF: 20...250							
Control coil rated voltage ranges, % U_s										
Coil with 50/60 Hz supply frequency	50 Hz	closure	Series F: 80...110 Series AF: 80...110 (1)							
		opening	Series F: 20...55 Series AF: ≤70 % U_s min							
	60 Hz	closure	Series F: 85...110 Series AF: 80...110 (1)							
		opening	Series F: 40...55 Series AF: ≤70 % U_s min							
Средняя потребляемая мощность при 20 °C, ВА										
Coil with 50/60 Hz supply frequency	50 Hz	switching	Series F: 210 Series AF: 35...120					Series F: 300 Series AF: 70...175		
		retention	Series F: 15 Series AF: 1,5...3,7					Series F: 20 Series AF: 1,7...3,5		
	60 Hz	switching	Series F: 195 Series AF: 35...120					Series F: 275 Series AF: 70...175		
		retention	Series F: 13 Series AF: 1,5...3,7					Series F: 17 Series AF: 1,7...3,5		
Heat dissipation at ≤20 °C 50 Hz, W			Series F: 5 Series AF: 1...2,5					Series F: 210 Series AF: 35...120		
DC power supply (series AF only)										
Rated voltage, V			20...250							
Control coil rated voltage ranges, % U_s										
Closure			80...110 (1)							
Opening			≤75 % U_s min							
Average power consumption at 20 °C, W (switching/ retention)		switching	23...68					70...80		
		retention	1,2...1,9					1,3...1,5		
Trip time, ms										
Average time at rated voltage control U_s	AC control coil / AC supply for series AF	closure NO	Series F: 12...28 Series AF: 40...85					Series F: 16...32 Series AF: 45...90		
		opening NO	Series F: 8...22 Series AF: 20...55					Series F: 9...24 Series AF: 24...60		
	DC power supply (series AF only)	closure NO	40...85					45...90		
		opening NO	20...55					24...60		
Wear resistance, mln cycles										
Mechanical			15	15	15	15	15	15	15	15
Electrical (I_e at 400 V AC-3)			1,5	1,4	1,4	1,3	1,1	1,4	1,2	0,8
Maximum switching frequency, cycle/h			Series F: 3600 Series AF: 1500							

(1) 85 % Us min only for 20...48 V coil with AC supply; 77 % Us min for 100...250 V coil only.
(2) Electromagnetic compatibility: AF-40...AF-94 contactors with 20...48 V AC/DC control coil comply with IEC/EN/BS 60947-1 and IEC/EN/BS 60947-1 for environment B (commercial value). Other contactors are suitable for use in environment A (industrial) and can be adapted for use in environment B by installing appropriate filters.

Contactors AF-160...F-1600

Type			AF-160	AF-195	AF-230	AF-265	AF-330	AF-400	F-500	F-630	F-1000	F-1250	F-1600
Specifications of power poles													
Number of power poles, pcs.			3–4	3–4	3–4	3–4	3	3–4	3–4	3–4	3–4	3–4	3–4
Rated insulation voltage U_i, V			1000										
Rated pulse withstand voltage U_{imp}, kV			8										
Operating frequency, Hz			25...400 (1)										
Operating current, A	Outdoor thermal stability current Ith (AC-1) at	≤40 °C	250	275	350	450	500	600	700	800	1000	1250	1600
		≤55 °C	210	230	290	375	415	500	550	640	850	1050	1360
		≤70 °C	180	200	250	325	360	435	500	540	700	880	1120
	AC-3 (≤440 V ≤55 °C)		160	195	230	265	330	400	520	630	–	–	–
	AC-4 (400 V) (2)		75	95	110	125	160	190	240	260	–	–	–
Rated short-time withstand current I_{cw} 10 s, A (IEC/EN/BS 60947-1)			1280	1560	1840	2120	2640	3200	4050	5040	5600	6500	8300
Rated fuse current for short-circuit protection at 400 V / 50 kA, A		gG	315	315	400	630	630	800	800	1000	1000	1250	1600
		aM	200	250	250	400	500	500	500	630	–	–	–
Rated making capacity (effective value), A			1360	1658	1955	2650	3300	4000	5000	6300	6300	6300	6300
Rated breaking capacity, A		≤440 V	1360	1658	1955	2120	2640	3200	5000	6300	6300	6300	6300
		500 V	1326	1326	1564	1792	2240	2752	4500	5600	5600	5600	5600
		690 V	1139	1377	1377	1624	2000	2504	4000	5000	5000	5000	5000
		1000 V	468	553	638	–	–	–	2700	3400	3400	3400	3400
Resistance, mOhm, and heat dissipation, W, per pole	R	mOhm	0,18	0,18	0,18	0,12	0,12	0,12	0,14	0,14	0,14	0,07	0,07
	I_{th}	W	11	13	21	24,3	30	43,2	68,6	90	140	110	180
	AC-3	W	4,5	6,7	9,3	8,4	13	19	35	56	–	–	–
Specifications of connections													
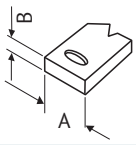		A	18	18	18	20	20	20	35	40	60	80	80
		B	5	5	5	5	5	5	6	6	6	10	10
		Screw + hex nut	M8	M8	M8	M10	M10	M10	M10	M12	2xM12	2xM12	2xM12
		Wrench mm	13	13	13	17	17	17	17	19	19	19	19
Min – max tightening torque of power pole terminals, Nm			18	18	18	35	35	35	35	55	55	55	55
Coil terminals (type)			Screw						Faston 1x6.35 or 2x2.8				
Min – max tightening torque of coil terminals, Nm			0,8–1,0						0,8–1,0 (3)				
Screwdriver type			PH 2						PH 2 (3)				
Conductor cross-section (1 or 2 conductors), min ... max, mm² / Busbar size, mm	1 or 2 buses		25x5	25x5	25x5	30x4	30x5	30x5	50x5	60x5	60x5	100x5	100x5
	1 cable with lug		185			240	240	240	–	–	–	–	–
	2 cables with lug		185			240	240	240	240	240			
Power terminals protection degree as per IEC/EN/BS 60529			IP00										
Operating conditions													
Ambient temperature, °C	during operation		-40...+70						-50...+70			-20...+60	
	during storage		-50...+80						-60...+80			-30...+80	
Maximum height above sea level, m			3000										
Installation position		rated	In a vertical plane										
		permissible	± 30°										
Mounting method			Screw										

(1) At frequencies above 60 Hz with derating.
(2) For utilization category AC-4, the switching life is reduced down to 200 thous, cycles.
(3) Only applicable when OptiStart K-FX-371 faston-screw connection adapter is installed.

Type		AF-160	AF-195	AF-230	AF-265	AF-330	AF-400	F-500	F-630	F-1000	F-1250	F-1600
Specifications of magnetic system												
Control coil current type		AC/DC						AC or DC			AC	
Rated voltage, V		20...500						48...480	48...480	48...480	110/240	110/240
Control coil rated voltage ranges, % U_s	closure	80 U_s min ...110 U_s max						80...110	80...110	80...110	80...110	80...110
	opening	≤70 % U_s min						20...60	20...60	20...60	20...60	20...60
Average power consumption at 20 °C, VA	switching	160...230			160-320			400	400	400	800	800
	retention	1,5...3,0			3,5-8			18	18	18	45	45
Heat dissipation at ≤20 °C 50 Hz, W		1,5...3,0			3,5-8			18	18	18	40	40
Trip time												
closure NO, ms		50...100			80...120			110...180	110...180	110...180	120...210	300...450
opening NO, ms		30...75			30...75			60...100	60...100	60...110	70...130	70...130
Wear resistance, mln cycles												
Mechanical		10	10	10	5	5	5	5	5	5	5	5
Electrical (I_e at 400 V AC-3)		1	1	1	0,9	0,7	0,7	0,7	0,7	–	–	–
Maximum switching frequency, cycle/h		1000			1000			1200				
Optional functions												
Alarm device		Open or closed state indicator										

Accessory specifications

Type		Auxiliary contact unit						Pneumatic adapter	Fourth power pole			Electromechanical interlocks	Mechanical latch
		FX-418.. FX-428..	FX-484.. FX-10.. FX-12..	FX-218 FX-481..	FX-482 (4)	FX-10C01 FX-10C10	FX-350 FX-354	FX-485.. FX-486.. FX-487..	FX-42 FX-D42	FX-43	FX-44	FX-5001 FX-5301 FX-5401	FX-222.. FX-272.. FX-641..
Conditional thermal current I_{th}, A		10	10	10	0,1 (4)	10	16	10	56	115	165	10	––
Rated insulation voltage U_i, V		690	690	690	690	690	690	690	690	1000	1000	690	––
Type of connection	Screw — type and width, mm	M3,5	M3	––	––	M3,5	––	M3,5	M4	M6	M8	M3	––
		7	7	––	––	7	––	7	12,5	9,6	14,5	7	––
	Faston connector terminal — q-ty and width, mm	––	––	1x6,35	1x6,35	––	1x6,35	––	––	––	––	––	––
				2x2,8	2x2,8		2x2,8						
Tightening torque, Nm		0,8...1	0,8...1	––	––	0,8...1	––	0,8...1	2,5...3	4...5	5,5...6,5	0,8...1	0,8...1
Maximum cross-section (1 or 2 conductors), mm²	Flexible without lug	2,5	2,5 (3)	––	––	2,5	––	2,5	16	35	70	2,5	4
	Flexible with lug	2,5	2,5	2,5	2,5	2,5	2,5	2,5	16	35	70	2,5	2,5
Ingress protection degree		IP20 (1)	IP20	IP20 (2)	IP20 (4)	IP20 (1)		IP20 (1)	IP20 (5)	IP20 (5)	IP20 (5)	IP20	––
Type as per IEC/EN/BS 60947-5-1	AC	A600	A600	A600	A600	A600	A600	A600	––	––	––	A600	––
	DC	Q600	P600	P600	P600	Q600	Q600	Q600	––	––	––	Q600	––
Mechanical wear resistance, mln cycles		3	10	10	10	5		3	20	15	15	10	0,1
Rated voltage of the control circuit, V	AC (50/60 Hz)	––	––	––	––	––		––	––	––	––	––	24...415
	DC	––	––	––	––	––		––	––	––	––	––	12...240
Control power consumption, VA/W	AC (50/60 Hz)	––	––	––	––	––		––	––	––	––	––	40
	DC	––	––	––	––	––		––	––	––	––	––	70
Maximum pulse duration, ms	for opening	––	––	––	––	––		––	––	––	––	––	––
	for closure	––	––	––	––	––		––	––	––	––	––	––

(1) Protection degree IP20 is ensured when conductors with a cross-section of at least 0.75 mm² are connected.
(2) Protection degree IP20 is ensured when conductors with an insulated faston connection are connected.
(3) 1.5 mm² for insulated lugs.
(4) Gold-plated contacts in a sealed casing for harsh environmental conditions. The I_{th} value is given for a voltage of 125 V AC or 30 V DC.

Specifications of power poles

Utilization category AC-3: Squirrel-cage motor, opening at a rated current

Maximum operating power at ambient temperature ≤55 °C

Contactor type	Operating current, A	Operating power, kW						
	(U_e ≤440 V)	220/230 V	380/400 V	415 V	440 V	500 V	660/690 V	1000 V
M-06	6	1,5	2,2	2,4	2,5	3	3	-
M-09	9	2,2	4	4,3	4,5	5	5	-
M-12	12	3,2	5,7	6,2	5,5	5	5	-
F-09	9	2,2	4,2	4,5	4,8	5,5	7,5	-
F-12	12	3,2	5,7	6,2	6,2	7,5	10	-
F-18	18	4	7,5	9	9	10	10	-
F-25	25	7	12,5	13,4	13,4	15	18	-
F-26	26	7,3	13	14	14	15,6	18,5	-
F-32	32	8,8	16	17	17	20	22	-
F-38	38	11	18,5	18,5	18,5	20	22	-
(A)F-40	40	11	18,5	22	22	22	30	18
(A)F-50	50	15	22	30	30	30	37	22
(A)F-65	65	18,5	30	37	37	37	45	30
(A)F-80	80	22	37	45	45	55	55	37
(A)F-94	95	30	45	55	55	55	55	37
(A)F-95	95	30	45	55	55	75	90	45
(A)F-115	115	37	55	55	55	75	110	55
(A)F-150	150	45	75	75	75	90	110	55
(A)F-160	160	45	75	90	90	110	132	75
(A)F-195	195	55	90	110	110	132	160	90
(A)F-230	230	55	110	110	132	132	160	110
AF-265	265	75	132	132	160	160	200	160
AF-330	330	90	160	160	160	200	250	185
AF-400	400	110	200	200	200	250	315	200
F-500	520	156	290	306	328	367	416	312
F-630	630	198	335	368	368	368	440	368

Operating current with parallel connection of contactor poles

If the contactor poles are connected in parallel, the contactor operating current specified in the table should be multiplied by the below coefficient K, which takes into account the uneven current distribution between different poles.
To minimize such uneven distribution, it is recommended to use jumpers (see the «Accessories» section)
2 of poles connected in parallel: K = 1.6
3 of poles connected in parallel: K = 2.2
4 of poles connected in parallel: K = 2.8

Electrical wear resistance at AC-3 ≤ 440 V

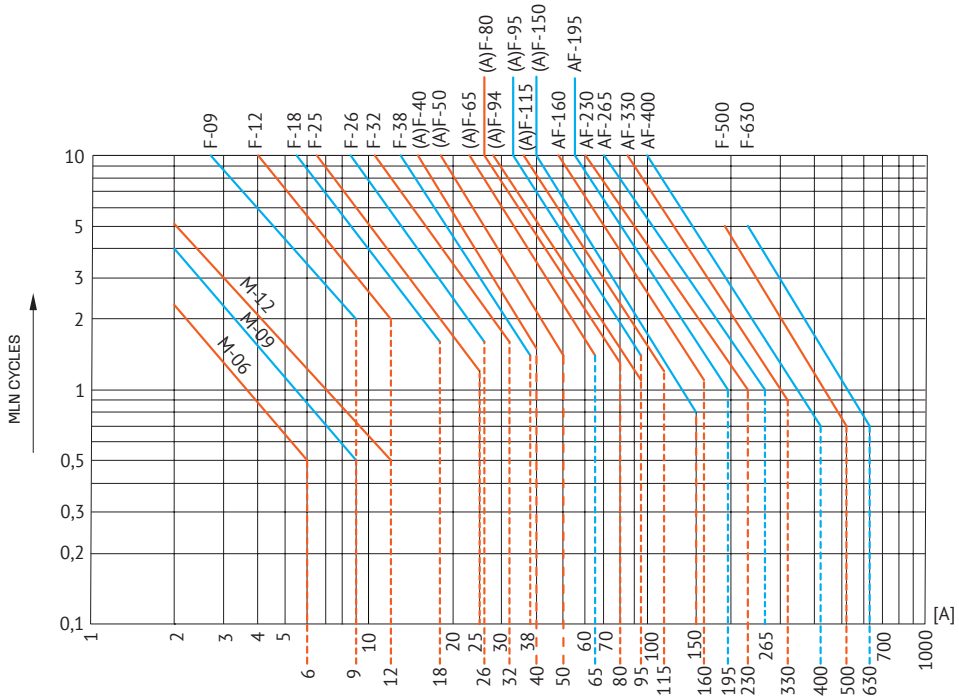

Utilization category DC-...

Maximum operating power at ambient temperature ≤55 °C

Voltage U_e	Contactor	Maximum current Ie, A in categories							
		DC-1 at L/R ≤ 1 ms with poles connected in series				DC-3 — DC-5 at L/R ≤ 15 ms with poles connected in series			
	Standard size	1	2	3	4	1	2	3	4
≤ 24 V	M-06	9	12	14	–	6	7	9	–
	M-09	12	15	16	16	7	8	10	10
	M-12	12	15	16	–	7	8	10	–
	F-09	15	18	20	20	10	13	15	15
	F-12	17	20	22	20	12	15	18	15
	F-18	17	20	22	22	12	15	18	18
	F-25	20	23	23	–	15	18	22	–
	F-26	25	28	28	28	18	20	25	30
	F-32	30	32	32	–	20	25	30	–
	F-38	35	36	36	36	24	28	32	32
	(A)F-40	40	48	48	–	27	32	40	–
	(A)F-50	45	60	60	60	30	35	50	55
	(A)F-65	50	70	70	70	35	45	55	60
	(A)F-80	70	100	100	100	40	60	80	90
	(A)F-94	77	110	110	115	45	65	86	96
	(A)F-95	140	140	140	140	140	140	140	140
	(A)F-115	160	160	160	160	160	160	160	160
	(A)F-150	165	165	165	165	165	165	165	165
48 V	M-06	8	11	14	–	5	7	9	–
	M-09	10	14	16	16	6	8	10	10
	M-12	10	14	16	–	6	8	10	–
	F-09	13	18	20	20	9	11	15	15
	F-12	15	20	22	20	11	13	18	15
	F-18	15	20	22	22	11	13	18	18
	F-25	18	23	23	–	13	18	22	–
	F-26	21	28	28	28	15	20	25	30
	F-32	26	32	32	–	17	22	28	–
	F-38	30	34	34	34	20	25	28	28
	(A)F-40	35	48	48	–	23	30	40	–
	(A)F-50	40	60	60	60	25	35	50	55
	(A)F-65	50	70	70	70	25	40	50	60
	(A)F-80	60	100	100	100	30	50	70	90
	(A)F-94	66	110	110	115	33	55	75	95
	(A)F-95	140	140	140	140	44	63	115	110
	(A)F-115	160	160	160	160	50	72	150	120
	(A)F-150	165	165	165	165	60	82	195	130
75 V	M-06	4	7	8	–	2	4	5	–
	M-09	4	9	10	10	2	5	6	6
	M-12	4	9	10	–	2	5	6	–
	F-09	12	17	20	20	8	10	13	15
	F-12	13	18	20	20	10	12	15	15
	F-18	15	20	20	20	11	13	16	16
	F-25	18	23	23	–	13	16	18	–
	F-26	18	25	25	25	13	18	20	25
	F-32	22	28	32	–	15	20	28	–
	F-38	23	29	33	33	17	22	28	28
	(A)F-40	30	45	48	–	19	27	38	–
	(A)F-50	40	60	60	60	22	30	45	55
	(A)F-65	50	70	70	70	25	40	50	60

Voltage U_e	Contactor	Maximum current Ie, A in categories:							
		DC-1 at L/R ≤ 1 ms with poles connected in series				DC-3 — DC-5 at L/R ≤ 15 ms with poles connected in series			
	Standard size	1	2	3	4	1	2	3	4
75 V	(A)F-80	60	100	100	100	30	50	70	90
	(A)F-94	66	110	110	115	33	55	75	95
	(A)F-95	100	140	155	155	36	60	90	110
	(A)F-115	120	160	160	160	40	65	100	120
	(A)F-150	150	165	165	165	44	70	110	130
	AF-160	250	250	250	250	160	160	160	160
	AF-195	275	275	275	275	180	180	180	180
	AF-230	350	350	350	350	250	250	250	250
	AF-265	350	350	350	350	280	280	280	280
	AF-330	375	375	375	375	310	310	310	310
	AF-400	400	400	400	400	350	350	350	350
	F-500	650	650	650	650	550	550	550	550
	F-630	800	800	800	800	800	800	800	800
110 V	M-06	3	6	8	–	1	3	4	–
	M-09	3	8	10	10	1	4	5	5
	M-12	3	8	10	–	1	4	5	–
	F-09	6	12	15	16	2	7	11	12
	F-12	6	13	16	16	2	8	12	16
	F-18	6	13	16	18	2	8	12	13
	F-25	6	16	18	–	2	10	15	–
	F-26	6	22	24	24	2	13	18	20
	F-32	8	25	27	–	2,5	15	20	–
	F-38	8	32	34	34	2,5	18	23	23
	(A)F-40	8	42	44	–	3	22	27	–
	(A)F-50	8	50	55	60	3	25	30	45
	(A)F-65	8	60	60	70	3	30	35	50
	(A)F-80	8	80	85	100	3	40	60	75
	(A)F-94	8	90	93	110	3	43	64	80
	(A)F-95	10	110	120	140	6	55	85	105
	(A)F-115	10	130	140	160	6	65	100	125
	(A)F-150	10	150	160	165	6	80	120	150
	AF-160	110	150	160	250	80	120	140	140
	AF-195	120	170	170	275	90	140	160	160
	AF-230	145	270	270	350	135	225	250	250
	AF-265	160	300	300	300	150	250	280	280
	AF-330	195	350	350	350	170	290	310	310
	AF-400	250	400	400	400	200	350	350	350
	F-500	320	550	600	600	320	550	550	550
	F-630	460	800	800	800	460	800	800	800
220 V	M-06	–	–	1	–	–	–	0,5	–
	M-09	–	–	2	2	–	–	0,8	0,8
	M-12	–	–	2	–	–	–	0,8	–
	F-09	–	1	10	12	–	2	6	7
	F-12	–	1	11	12	–	2	6	7
	F-18	–	1	11	13	–	2	6	8
	F-25	–	1	12	–	–	2	8	–
	F-26	–	2	20	26	–	3	19	15
	F-32	–	3	23	–	–	3	23	–
	F-38	–	4	30	38	–	3	25	15
	(A)F-40	–	5	56	70	–	5	32	40
	(A)F-50	–	7	75	90	–	5	40	50
	(A)F-65	–	9	90	110	–	5	52	65

Voltage U_e	Contactor	Maximum current Ie, A in categories							
		DC-1 at L/R ≤ 1 ms with poles connected in series				DC-3 — DC-5 at L/R ≤ 15 ms with poles connected in series			
	Standard size	1	2	3	4	1	2	3	4
220 V	(A)F-80	–	9	95	115	–	5	64	80
	(A)F-94	–	9	95	115	–	5	64	80
	(A)F-95	–	12	125	140	–	7	76	95
	(A)F-115	–	14	145	160	–	7	92	115
	(A)F-150	–	14	150	165	–	7	120	150
	AF-160	–	130	150	250	–	90	120	140
	AF-195	–	150	170	275	–	100	140	160
	AF-230	–	225	270	350	–	180	225	225
	AF-265	–	250	300	300	–	200	250	280
	AF-330	–	300	350	350	–	230	290	310
	AF-400	–	350	400	400	–	280	350	350
	F-500	–	450	600	600	–	450	550	550
	F-630	–	700	800	800	–	700	800	800
330 V	AF-160	–	–	130	150	–	–	90	140
	AF-195	–	–	150	170	–	–	100	160
	AF-230	–	–	225	270	–	–	180	210
	AF-265	–	–	250	300	–	–	200	280
	AF-330	–	–	300	350	–	–	230	310
	AF-400	–	–	350	400	–	–	280	350
	F-500	–	–	450	600	–	–	450	550
	F-630	–	–	700	750	–	–	650	700
460 V	AF-160	–	–	–	130	–	–	–	90
	AF-195	–	–	–	150	–	–	–	100
	AF-230	–	–	–	225	–	–	–	180
	AF-265	–	–	–	250	–	–	–	200
	AF-330	–	–	–	300	–	–	–	230
	AF-400	–	–	–	350	–	–	–	280
	F-500	–	–	–	450	–	–	–	450
	F-630	–	–	–	700	–	–	–	700

Selection rules

Parameters to be taken into account when selecting a contactor:
– operating current I_e
– operating voltage U_e
– utilization category and time constant L/R
– electrical wear resistance

Ambient conditions during operation

The specified currents are valid under the following conditions:
– ambient temperature: ≤ 55 °C
– switching frequency: up to 120 cycles/h with 60% load, up to 250 cycles/h with 30% load

Poles connected in series

Depending on the operating voltage, contactors with the specified number of poles connected in series should be used. Poles connected in series can be connected either in one polarity or distributed between both polarities of the circuit.

Note: For voltages below 30 V, it is not recommended to make connections using the connection diagrams shown in the below figure; otherwise a significant voltage drop may occur. In this case, it is preferable to use contactors with poles connected in parallel, following the instructions given in the next paragraph.

Example of series connection of poles

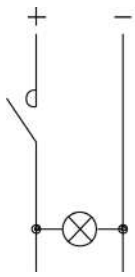

Fig. 1

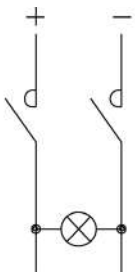

Fig. 2

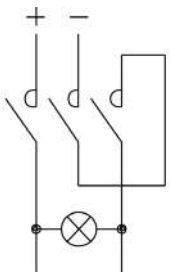

Fig. 3

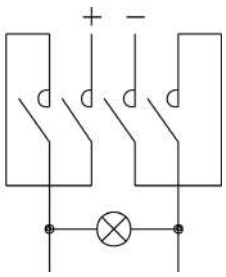

Fig. 4

Poles connected in parallel

In case of operation at a voltage that requires 1 or 2 poles connected in series, the electrical durability can be increased by connecting the poles in parallel.
In case of direct current, poles connected in parallel do not increase the maximum operating current specified in the above tables, but make it possible to increase the rated contact current, if the contactor makes no-load switching or is used as a shunt contact.
In this case, the contact current can be calculated by multiplying the rated current of one pole by the below coefficient. For example, if the current of one pole is 10 A, then the current of three poles connected in parallel will be as follows: 10 * 2,2 = 22 A.
Therefore, the working current is the current specified in the tables, which is multiplied by a coefficient that takes into account the uneven current distribution across individual poles.
2 poles connected in parallel: K = 1.6
3 poles connected in parallel: K = 2.2
4 poles connected in parallel: K = 2.8

Fig. 5

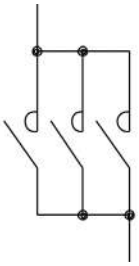
Fig. 6

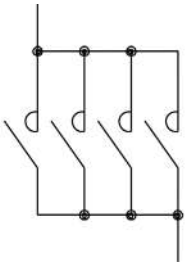
Fig. 7

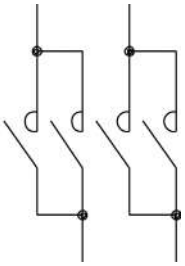
Fig. 8

Switching of lighting circuits

General information

When a contactor is selected for switching the lighting loads, the following characteristics should be taken into account:
– lamp type
– power factor (cos φ)
– availability or absence of reactive power compensation devices
– current upon activation and in the rated mode.

Depending on the type and number of lamps, it is necessary to take into account that the parameters influencing the choice are:
– incandescent lamps and LED lamps: making capacity of the
– lamps without reactive power compensation: rated current in category AC-1
– lamps with reactive power compensation: rated current in category AC-3

Key specifications of the most commonly used types of lamps are listed below.

Lamp type	Activation		Deactivation	
	Multiple of I_n (1)	cos φ	Multiple of I_n (1)	cos φ
Incandescent lamps	15	1	1	1
Self-ballasted mercury lamps	1,3	1	1	1
Fluorescent lamps	1,15...1,3	0,2	1	0,3...0,5 (without reactive power compensation) 1 (with reactive power compensation)
High-pressure mercury lamps	1,5...1,75	0,2	1	0,45...0,7 (without reactive power compensation)
High-pressure sodium lamps	1,3...1,5	0,2	1	0,3...0,5 (without reactive power compensation)
Low-pressure sodium lamps	1	0,2...0,5	1	0,2...0,5 (without reactive power compensation)
Halogen lamps	1,7...2,1	0,2	1	0,4...0,5 (without reactive power compensation)
LED	20...40 (5)	0,6...0,95	1	0,6...0,95

Selection of contactors for switching lighting circuits

Lamp specifications		Power, W	Rated current, A	Capacitance, µF	Maximum number [n] of lamps for each contactor pole (2)										
					M-06 M-09 M-12	F-09 F-12 F-18	F-25	F-26 F-32	F-38	(A)F-40 (A)F-50	(A)F-65 (A)F-80 (A)F-94	(A)F-95	(A)F-115 (A)F-150	AF-160	AF-195 AF-230
LED 220...240 V 50/60 Hz	See note (6)				Each pole can switch 67% of the rated current at AC-3 (6)										
Incandescent lamps 220...240 V	50/60 Hz	60	0,27	–	30	48	92	118	129	203	240	296	370	425	462
		100	0,45	–	18	28	55	71	77	122	144	177	222	255	277
		200	0,91	–	8	14	27	35	38	60	71	87	109	126	137
		300	1,4	–	5	9	17	22	25	39	46	57	71	82	89
		500	2,3	–	3	5	10	13	15	23	28	34	43	50	54
		1000	4,6	–	1	2	5	6	7	11	14	17	21	25	27
Self-ballasted mercury lamps 220...240 V	50/60 Hz	100	0,45	–	20	33	57	77	88	122	144	177	244	311	377
		160	0,72	–	12	20	36	48	55	76	90	111	152	194	236
		250	1,13	–	8	13	23	30	35	48	57	70	97	123	150
		500	2,3	–	4	6	11	15	17	23	28	34	47	60	73
		1000	4,6	–	1	3	5	7	8	11	14	17	23	30	36
Fluorescent lamps with electronic power supply unit 220...240 V 50/60 Hz (EVG)	Single installation	16/18	0,1	(6,8) (3)	48	80	160	220	220	400	450	500	750	1050	1200
		32/36	0,18	(6,8) (3)	27	44	88	122	122	222	250	277	416	583	666
		50/58	0,27	(10) (3)	17	29	59	82	82	148	166	185	277	388	444
	Dual installation	2x16/18	0,18	(10) (3)	26	44	88	122	122	222	250	277	416	583	666
		2x32/36	0,35	(10) (3)	13	22	45	62	62	114	128	142	214	300	342
		2x50/58	0,52	(22) (3)	9	15	30	42	42	76	86	96	144	201	230
Regular fluorescent lamps 220...240 V 50/60 Hz	Without reactive power compensation Single installation	15	0,35	–	25	42	74	100	114	157	185	228	314	400	485
		20	0,37	–	24	40	70	94	108	148	175	216	297	378	459
		40	0,44	–	20	34	59	79	90	125	147	181	250	318	386
		65	0,7	–	12	21	37	50	57	78	92	114	157	200	242
		115	1,5	–	6	10	17	23	26	36	43	53	73	93	113
		140	1,5	–	6	10	17	23	26	36	43	53	73	93	113
Regular fluorescent lamps 220...240 V 50/60 Hz	With reactive power compensation Single installation	15	0,11	4,5	24	40	62	94	94	200	200	200	533	533	533
		20	0,16	4,5	24	40	62	94	94	200	200	200	533	533	533
		40	0,24	4,5	24	40	62	94	94	200	200	200	458	500	520
		65	0,4	7	15	25	40	50	57	125	128	128	275	300	312
		115	0,7	18	6	10	15	23	23	50	50	50	133	133	133
		140	0,7	18	6	10	15	23	23	50	50	50	133	133	133
	With reactive power compensation Dual installation	2x20	0,26 (4)	–	54	57	100	153	153	211	250	307	423	538	653
		2x40	0,46 (4)	–	19	32	56	86	86	119	141	173	239	304	369
		2x65	0,7 (4)	–	12	21	37	57	57	78	92	114	157	200	242
		2x115	1,3 (4)	–	6	11	20	30	30	42	50	61	84	107	130
		2x140	1,5 (4)	–	6	10	17	26	26	36	43	53	73	93	113

Lamp specifications		Power, W	Rated current, A	Capacitance, µF	Maximum number [n] of lamps for each contactor pole (2)										
					M-06 M-09 M-12	F-09 F-12 F-18	F-25	F-26 F-32	F-38	(A)F-40 (A)F-50	(A)F-65 (A)F-80 (A)F-94	(A)F-95	(A)F-115 (A)F-150	AF-160	AF-195 AF-230
High-pressure mercury lamps 220...240 V 50/60 Hz	Without reactive power compensation	50	0,61	–	10	16	26	36	44	65	73	82	122	172	196
		80	0,8	–	7	12	20	27	33	50	56	62	93	131	150
		125	1,2	–	5	8	13	18	22	33	37	41	62	87	100
		250	2,2	–	3	4	7	10	12	18	20	22	34	47	54
		400	3,4	–	2	3	5	6	7	11	13	14	22	30	35
		700	5,5	–	–	1	3	4	4	7	8	9	13	19	21
		1000	8	–	–	1	2	2	3	5	5	6	9	13	15
	With reactive power compensation	50	0,29	7	15	25	40	60	60	128	128	128	258	342	342
		80	0,42	8	13	22	35	52	53	95	107	112	178	250	285
		125	0,7	10	8	14	22	31	35	57	64	71	107	150	171
		250	1,3	18	4	7	12	16	19	30	34	38	57	80	92
		400	2,1	25	2	4	7	10	11	19	21	23	35	50	57
		700	3,6	40	–	2	4	6	6	11	12	13	20	29	33
		1000	5,3	60	–	1	3	4	4	7	8	9	14	19	22
380...415 V 50/60 Hz	Without reactive power compensation	2000	8	–	–	–	1	2	2	3	3	4	5	8	9
	With reactive power compensation	2000	5,5	35	–	–	1	2	2	4	5	5	8	11	13
High-pressure sodium lamps 220...240 V 50/60 Hz	Without reactive power compensation	150	1,8	–	3	5	8	12	15	22	25	27	41	58	66
		250	3	–	2	3	5	7	9	13	15	16	25	35	40
		400	4,7	–	1	2	3	4	5	8	9	10	15	22	25
		600	7,1	–	–	1	2	3	3	5	6	6	10	15	16
		1000	10,4	–	–	–	1	2	2	3	4	4	7	10	11
	With reactive power compensation	150	0,83	20	–	9	14	19	21	45	45	45	90	120	120
		250	1,5	36	–	5	7	10	11	25	25	25	50	66	66
		400	2,4	48	–	3	5	6	7	16	18	18	31	43	50
		600	3,5	68	–	2	3	4	4	10	12	12	20	28	34
		1000	6,3	120	–	1	1	2	2	6	7	7	11	16	19
Low-pressure sodium lamps 220...240 V 50/60 Hz	Without reactive power compensation	35	1,5	–	4	6	10	14	18	26	30	33	50	70	80
		55	1,5	–	4	6	10	14	18	26	30	33	50	70	80
		90	2,4	–	3	4	6	9	11	16	18	20	31	43	50
		135	3,1	–	2	3	5	7	8	12	14	16	24	33	38
		150	3,2	–	2	3	5	6	8	12	14	15	23	32	37
		180	3,3	–	2	3	4	6	8	12	13	15	22	31	36
	With reactive power compensation	35	0,31	20	–	6	10	14	18	45	45	45	120	120	120
		55	0,42	20	–	6	10	14	18	45	45	45	120	120	120
		90	0,63	30	–	4	6	9	11	30	30	30	80	80	80
		135	0,94	40	–	3	5	7	8	22	22	22	60	60	60
		150	1	40	–	3	5	6	8	22	22	22	60	60	60
		180	1,2	40	–	3	4	6	8	22	22	22	60	60	60
Metal halide lamps 220...240 V 50/60 Hz	Without reactive power compensation	35	0,3	–	–	28	50	66	80	100	150	167	250	330	400
		70	0,5	–	–	16	28	40	50	60	90	100	150	200	240
		150	1	–	–	8	14	20	25	30	45	50	75	100	120
		250	3	–	–	3	5	7	9	13	15	16	25	35	40
		400	3,5	–	–	2	4	6	7	11	12	14	21	30	34
		1000	10	–	–	1	1	2	2	4	4	5	7	10	12
		2000	17	–	–		-	1	1	2	2	2	4	6	7
	With reactive power compensation	35	0,17	6	–	33	60	65	65	200	240	260	400	420	440
		70	0,28	12	–	20	36	40	40	120	145	155	240	255	265
		150	0,6	20	–	9	17	18	18	56	68	74	112	118	120
		250	1,5	32	–	5	7	8	10	26	28	28	46	50	53
		400	2	35	–	4	5	6	7	20	22	25	35	37	40
		1000	5,8	95	–	1	1	2	2	6	7	8	12	12	13
		2000	11,5	148	–	–	–	1	1	3	3	4	6	6	6
380...415 V 50/60 Hz	Without reactive power compensation	2000	10,3	–	–	–	–	1	1	2	2	3	4	6	7
		3500	18	–	–	–	–	–	–	1	1	1	2	3	4
	With reactive power compensation	2000	6,6	60	–	–	1	1	1	3	3	4	6	7	7
		3500	11,6	100	–	–	–	–	–	2	2	2	3	3	4

(1) In = lamp rated current
(2) For single-phase networks (between phase and neutral) or two-phase networks (between phase and phase), the maximum number of lamps corresponds to the number given in the table.
For three-phase networks with neutral, the maximum number of lamps switched by the contactor is n * 3
For three-phase networks without neutral, the maximum number of lamps switched by the contactor is n * √3
Electrical endurance at +55 °C: 100,000 cycles
(3) Capacitors built into the power supply unit
(4) Total power
(5) On the AC side of the power supply units
(6) As a rule, each lamp has its own power supply unit (driver). If several lamps are powered by a single power supply unit, it should be taken into account that the sum of rated currents of power supply units connected to each pole of a contactor should not exceed 67% of the rated current for utilization category AC-3

Capacitance load switching

General information and selection criteria

During the transient process, the contactors are exposed to high-frequency current with a large amplitude.
Current frequency range — 1 to 10 kHz Contactors should be selected so that the maximum amplitude of the current passing through the contactor is lower than the maximum permissible current of the selected contactor.

Ambient conditions during operation

Ambient temperature: ≤ 55 °C
At temperatures above +50 °C, the operating power specified in the table should be reduced by a percentage equal to the difference (in percent) between the actual temperature and 50 °C.
Switching frequency: ≤ 120 cycles/hour
Electrical wear resistance: 100,000 cycles min

Contactor type	Rated current, A ≤400 V	Maximum permissible peak current, A	Maximum operating voltage, V	Fuse, A gG	Maximum operating power (AC-6b), kVAr			
					220 V 230 V 240 V	380 V 400 V	415 V 440 V	500 V 660/690 V
F-09	12	500	690	16	4,5	7,5	9	10
F-12	18	550	690	25	7	12,5	12	14
F-18	23	1000	690	32	9	15	16	18
F-25	23	1000	690	32	9	15	16	18
F-26	30	1400	690	40	11	20	22	22
F-32	36	1700	690	50	14	25	27	30
F-38	43	1900	690	63	17	30	30	34
(A)F-40	50	2500	1000	100	20	35	40	45
(A)F-50	58	2500	1000	80	22	40	41	45
(A)F-65	65	2500	1000	100	26	45	50	52
(A)F-80	75	2500	1000	125	30	50	56	60
(A)F-94	75	2500	1000	125	30	50	56	70
(A)F-95	90	3000	1000	125	34	60	75	80
(A)F-115	115	3000	1000	160	45	75	85	135
(A)F-150	144	3000	1000	160	50	100	115	150
AF-160	150	3400	1000	200	57	100	108	130
AF-195	170	3600	1000	250	65	112	122	150
AF-230	215	4500	1000	315	85	140	150	190
AF-265	240	5100	1000	315	91	158	172	210
AF-330	265	5900	1000	315	105	184	200	245
AF-400	320	7500	1000	400	122	211	230	280
F-500	500	9000	1000	630	190	330	360	430
F-630	610	11000	1000	800	230	400	432	520

Current-limiting ballast resistors

Using contactors for switching the load power specified in the table is only possible when the design peak current of the load does not exceed the maximum peak current specified in the table. If the condition is not met, it is necessary to use current-limiting ballast resistors, information on which is presented in the «Accessories» section.

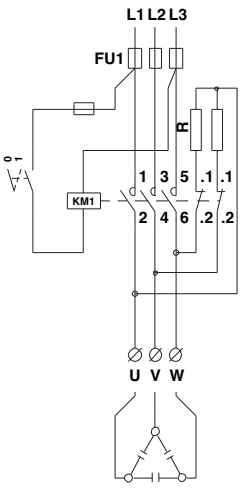

Resistors for fast capacitor discharge

Connecting the resistors according to the specified diagram when the contactor coil is de-energized ensures both instantaneous disconnection of the capacitors and their fast discharge. The resistors specified in the below table ensure discharge in a maximum of 2 s.

Reactive power of capacitors, kVAr	Voltage 220...230 V		Voltage 380...500 V	
	Ω	W	Ω	W
2,5...5	3900	12	8200	12
10...15	1800	25	4300	25
20...50	1000	50	2200	50

Special contactors for capacitors switching

General information

Series FK contactors are equipped with auxiliary contacts with advance closure. These contacts are designed to connect resistors for a short time (2-3 ms) during the contactor closing period, which limit the capacitors charging current. These resistors are disconnected as soon as the closing process of the main contactor contacts is completed.
This connection diagram allows to reduce the electrical load on all system components and to increase their service life and reliability.
The main scope of application of such contactors is compact automatic reactive power control systems (RPCS), since in this case they do not require a current-limiting inductance and do not dissipate a large amount of heat, which allows to reduce the dimensions of design solutions.

Ambient conditions during operation

Ambient temperature: ≤ 50 °C
At an ambient temperature of 50 to 70 °C, the maximum operating power specified in the table should be reduced by a percentage equal to the difference between the actual ambient temperature and 50 °C.
Frequency of operations: ≤ 120 cycles/h.
Electrical durability: ≥ 400,000 cycles.

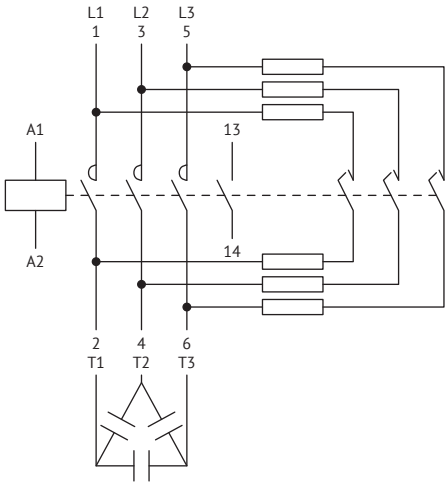

Auxiliary contact 13-14 is installed on FK-09...FK-18 contactors only

Contactor type	Number of built-in auxiliary contacts, pcs.	Rated operating current, A ≤440 V	Fuse, A gG	Maximum power at ≤50 °C (AC-6b) (1), kBAr			
				220 V 230 V 240 V	380 V 400 V	415 V 440 V	500 V 690 V
FK-09	1	12	16	4,5	7,5	9	10
FK-12	1	18	25	7	12,5	14	16
FK-18	1	23	40	9	15	17	20
FK-26	–	30	40	11	20	22	25
FK-32	–	36	63	14	25	27,5	30
FK-38	–	43	63	17	30	33	36
FK-50	–	58	80	22	40	41	46
FK-65	–	65	100	26	45	50	56
FK-80	–	75	125	30	50	56	65
FK-94 (2)	–	90	125	34	60	75	80
FK-95	–	90	125	34	60	75	80
FK-115	–	115	160	45	75	85	135
FK-150	–	144	160	50	100	115	150

(1) For selection of contactors for inside-delta switching applications, please contact our technical support team
(2) The maximum thermal current Ith of FK-94 contactor is 115 A.

Installation positions

Vertical plane horizontally

The specifications described in this catalog are provided for contactors installed in the vertical plane. All series F contactors can be installed with an inclination of ±30° from their vertical axis without deterioration of their characteristics.
The inclination for F-09...AF-230 contactors may be ± 90°. For series M mini-contactors:
– position A with coil terminals A1-A2 at the bottom is not recommended;
– position A with terminals A1-A2 at the top is not recommended for mini-contactors with NC contacts.

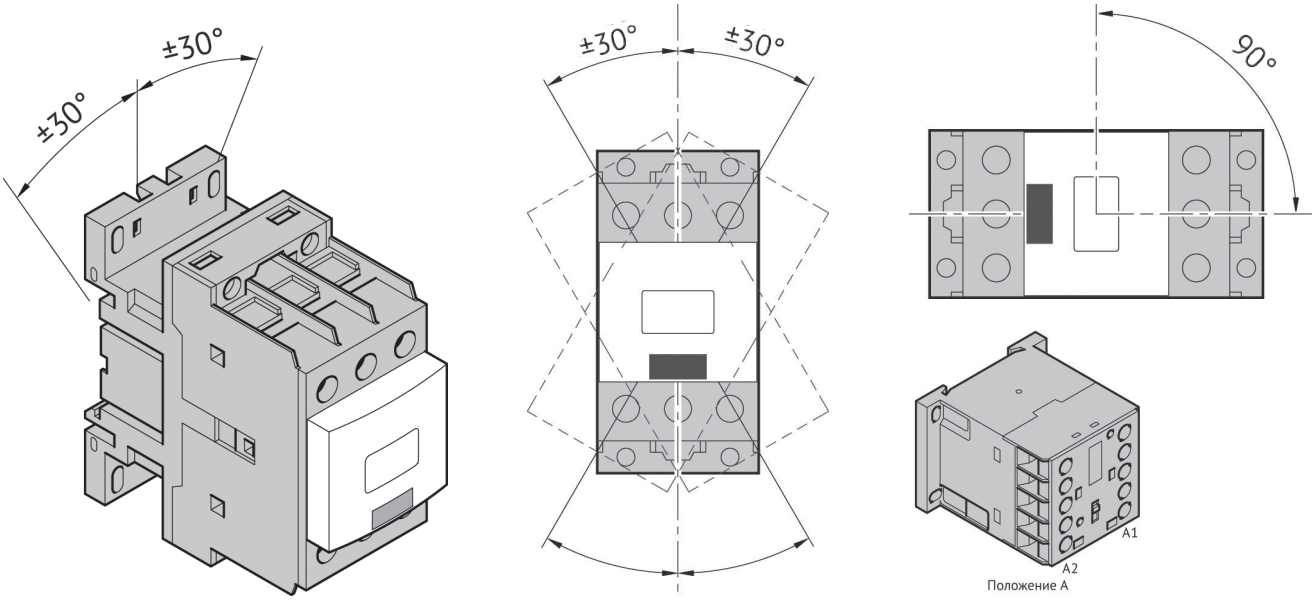

Vertical plane by depth

All contactors can be installed in the vertical plane by depth with an inclination of up to ±30°.
When the contactor is installed in plane with an inclination of -30°, the minimum tripping voltage increases by an average of 5 %.

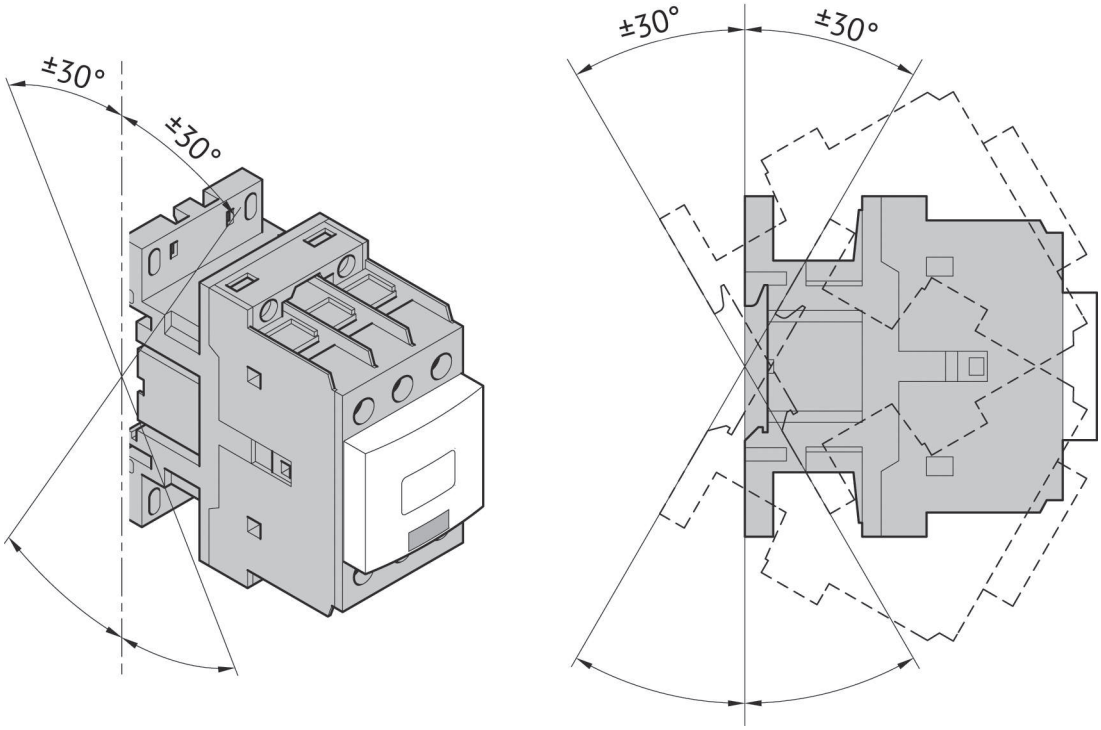

In the horizontal plane (for series F-09...AF-230 only)

It is necessary to distinguish between two possible installation positions:
– when the contactor is energized, its moving element moves from top down;
– when the contactor is de-energized, its moving element moves from bottom up.
In the first case, a greater force is required to open the contacts, in the second – to close them. The use of position B is not recommended.
Significant deviations from the specifications are possible.

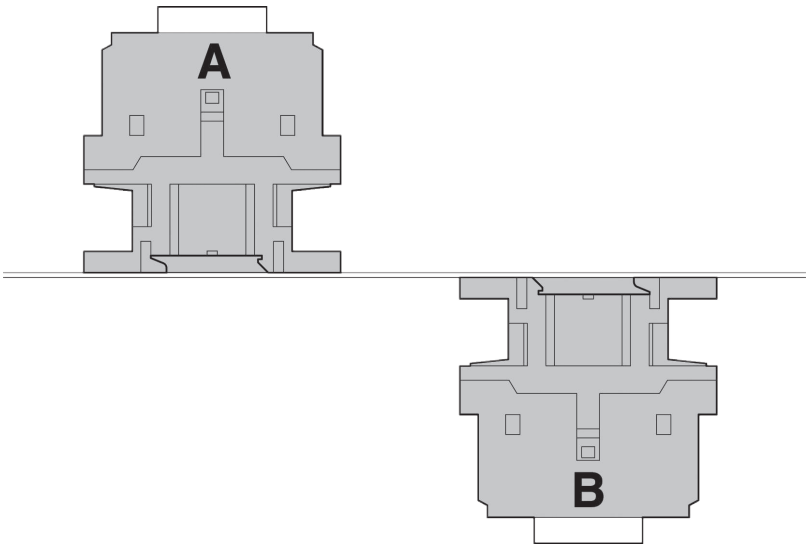

Dynamic tests

The contactors have passed dynamic tests with the installation positions contactors rotated by ±22.5° relative to three orthogonal axes.

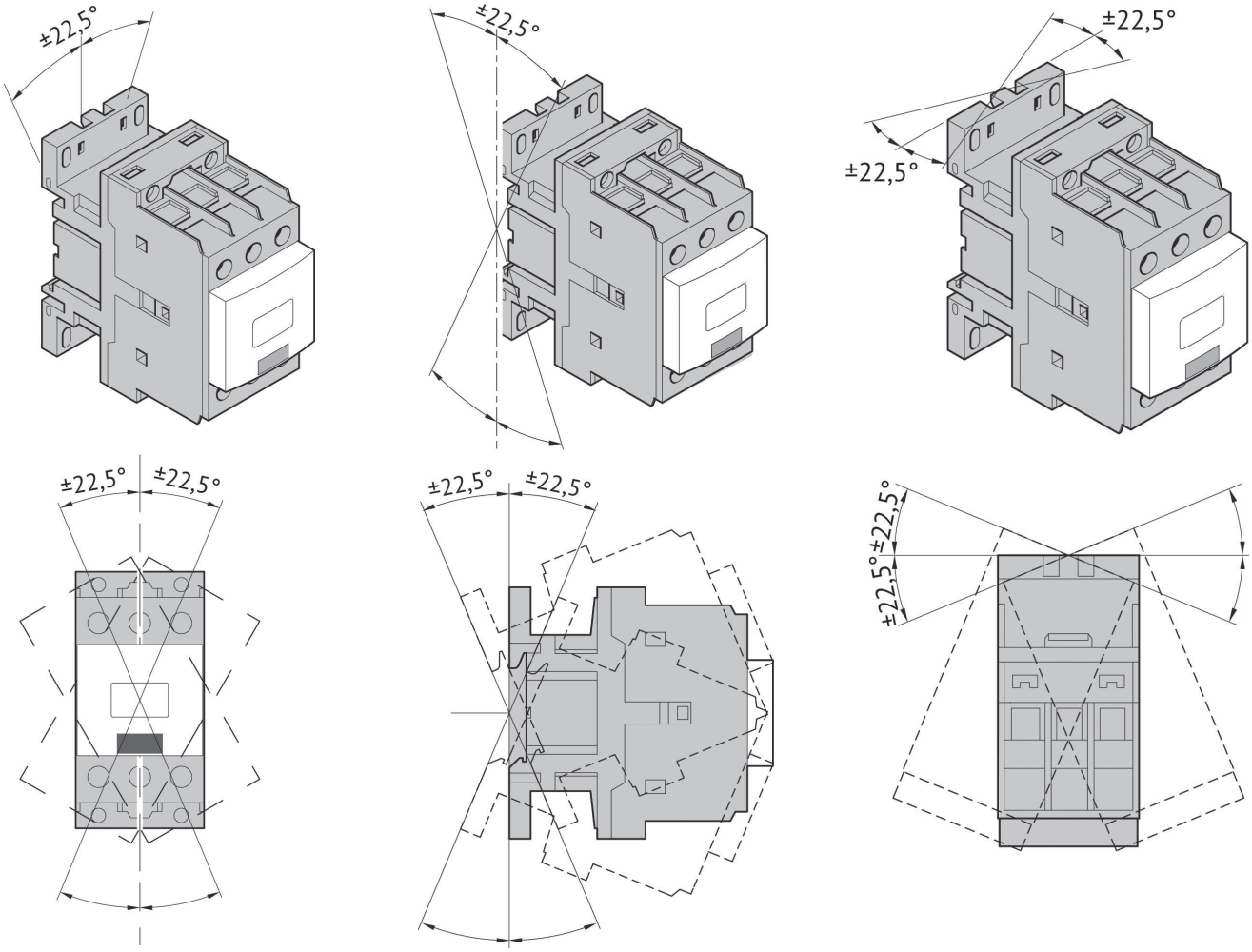

Vertical interlock device between series F-500...F-1000 contactors mounted one above the other

Series FX-356... interlock module available in six versions for different axle spacing of contactor fixing is used. It is possible to interlock contactors of both the same and different standard sizes. The following tables indicate the axle spacing provided by interlock devices of different types; with terminal covers (axle spacing A) and without them (axle spacing B).

Axle spacing A, mm - For contactors with terminal protective covers (Fig. 1)	
KM1	
KM2	F-500 F-630
FX-3566	470...500
For interlocking of 2 F-1000 contactors, only FX-3566 may be used. For interlocking of two (2) F-1250 and F-1600 contactors, two FX-3566 interlock modules should be used: one on the left side and one on the right side of the contactor.	

Axle spacing B, mm - For contactors without protective cover (Fig. 1)	
KM1	
KM2	F-500 F-630
FX-3565	390...425
FX-3566	470...500
The axle spacing B is 470-500 mm for F-1000, F-1250 or F-1600. Interlocking of F-1250 or F-1600 contactors with series F contactors of other sizes is prohibited.	

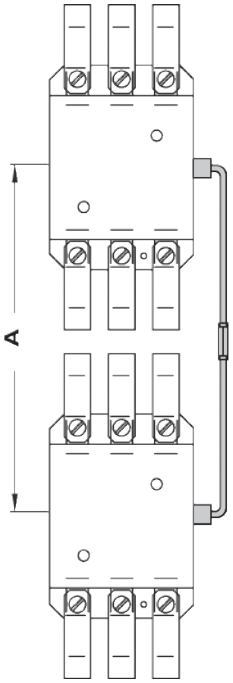

Fig.1

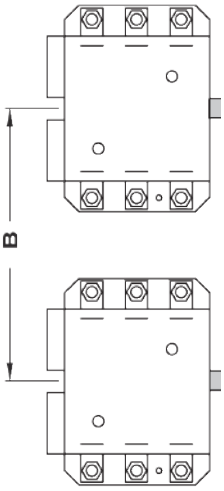

Fig.2

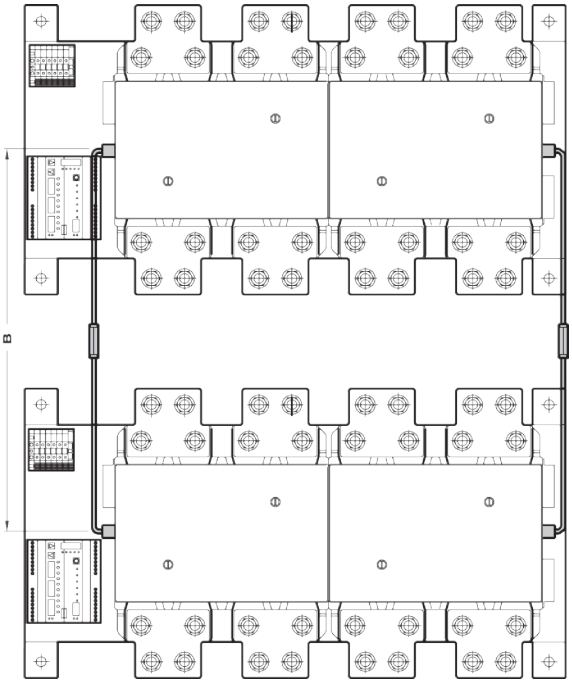

Fig.3

The horizontal and vertical interlock modules FX-355 and FX-356... for contactors F-500...F-630 are used for mutual interlocking of the same contactors or contactors with different sizes (for example: F-500 can be interlocked with F-630).

Possible installation positions of FX-350 and FX-354 auxiliary contacts in combination with mechanical interlock modules:

Horizontal FX-355

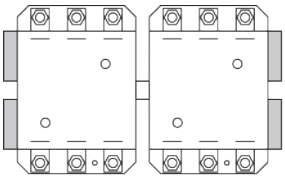

F-500...F-630

Vertical FX-356

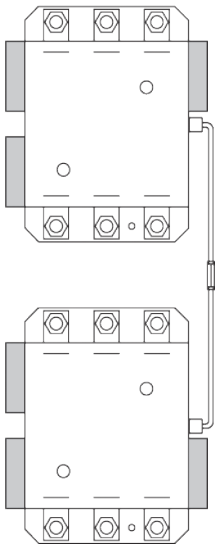

F-500...F-1000

Possible installation positions of FX-358 adapter in combination with mechanical interlock modules:

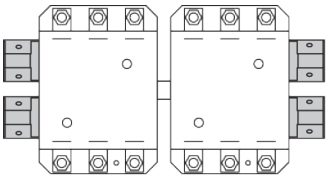

F-500...F-630

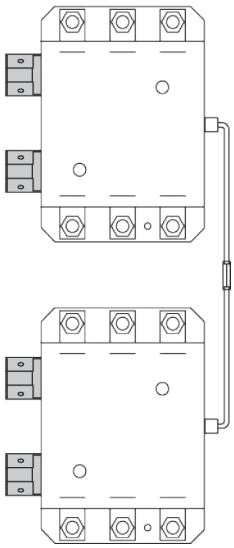

F-500...F-1000

Accessories

Front-mounted auxiliary contact units with central attachment with screw terminals

Appearance	Compatible devices	Auxiliary contacts		Product name	Code
		NO	NC		
	F-09..(A)F-150 and FR	0	2	OptiStart K-FX-1002 (1)	335318
	F-09..(A)F-150 and FR	1	1	OptiStart K-FX-1011 (1)	335320
	F-09..(A)F-150 and FR	2	0	OptiStart K-FX-1020 (1)	335323
	F-09..(A)F-150 and FR	1 with advance (2)	1 with delay (3)	OptiStart K-FX-101111	335321
	F-09..(A)F-150 and FR	0	4	OptiStart K-FX-1004	335319
	F-09..(A)F-150 and FR	1	3	OptiStart K-FX-1013	335322
	F-09..(A)F-150 and FR	2	2	OptiStart K-FX-1022	335324
	F-09..(A)F-150 and FR	3	1	OptiStart K-FX-1031	335325
	F-09..(A)F-150 and FR	4	0	OptiStart K-FX-1040	335326
	F-09..(A)F-150 and FR	0	3	OptiStart K-FX-48403 (1)	335300
	F-09..(A)F-150 and FR	1	2	OptiStart K-FX-48412 (1)	335301
	F-09..(A)F-150 and FR	2	1	OptiStart K-FX-48421 (1)	335302
	F-09..(A)F-150 and FR	3	0	OptiStart K-FX-48430 (1)	335303
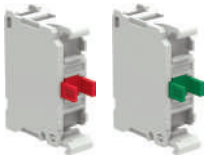	AF-160..AF-400	0	1	OptiStart K-FX-10C01	335327
	AF-160..AF-400	1	0	OptiStart K-FX-10C10	335328

Note: For possible combinations and configurations, see the «Installation Positions» section

(1) When OptiStart K-FX-358 adapter is used, installation on F-500...F-1000 contactors is possible.
(2) Normally open contact with advance closure
(3) Normally closed contact with delayed opening

Front-mounted auxiliary contact units with side attachment with screw terminals (1)

Appearance	Compatible devices	Auxiliary contacts		Product name	Code
		NO	NC		
	F-09..(A)F-150 and FR	0	1	OptiStart K-FX-41801	335283
	F-09..(A)F-150 and FR	0	1 with delay (2)	OptiStart K-FX-41801D	335284
	F-09..(A)F-150 and FR	1	0	OptiStart K-FX-41810	335285
	F-09..(A)F-150 and FR	1 with advance (3)	0	OptiStart K-FX-41810A	335286

Note: For possible combinations and configurations, see the «Installation Positions» section

(1) Protection degree IP20 is ensured when conductors with a cross-section of at least 0.75 mm² are connected. Specifications when used with direct current: Q600
(2) Normally closed contact with delayed opening
(3) Normally open contact with advance closure

Front-mounted auxiliary contact units with side attachment with faston terminals (1)

Appearance	Compatible devices	Auxiliary contacts		Product name	Code
		NO	NC		
	F-09..(A)F-150 and FR	0	2	OptiStart K-FX-48102	335295
	F-09..(A)F-150 and FR	1	1	OptiStart K-FX-48111	335296
	F-09..(A)F-150 and FR	2	0	OptiStart K-FX-48120	335297
	F-09..(A)F-150 and FR	1 CO		OptiStart K-FX-482 (2)	335298
	F-09..(A)F-150 and FR	1 or	1	OptiStart K-FX-218	335317

Note: For possible combinations and configurations, see the «Installation Positions» section

(1) Protection degree IP20 is ensured when conductors with an insulated faston connection are connected.
(2) Gold-plated contacts in a sealed casing for harsh environmental conditions.

Bracket for side mounting of auxiliary contacts

Appearance	Compatible auxiliary contact units	Product name	Code
	FX-218..	OptiStart K-FX-280	335282
	FX-418..	OptiStart K-FX-419	335287
	FX-481..; FX-482	OptiStart K-FX-483	335299

Side mounted auxiliary contact units with screw terminals

Appearance	Compatible devices	Auxiliary contacts		Product name	Code
		NO	NC		
	F-09..(A)F-150 and FR	0	2	OptiStart K-FX-1202	335331
	F-09..(A)F-150 and FR	1	1	OptiStart K-FX-1211	335332
	F-09..(A)F-150 and FR	2	0	OptiStart K-FX-1220	335333
	F-09..(A)F-150 and FR	0	1	OptiStart K-FX-42801	335288
	F-09..(A)F-150 and FR	0	1 with delay (1)	OptiStart K-FX-42801D	335289
	F-09..(A)F-150 and FR	1	0	OptiStart K-FX-42810	335290
	F-09..(A)F-150 and FR	1 with advance (2)	0	OptiStart K-FX-42810A	335291
	AF-160..AF-400	0	2	OptiStart K-FX-12C02	335334
	AF-160..AF-400	1	1	OptiStart K-FX-12C11	335335
	AF-160..AF-400	2	0	OptiStart K-FX-12C20	335336
	F-500...F-1000	1 or 2	2 1	OptiStart K-FX-350	335405
	F-500...F-1000	1	1	OptiStart K-FX-354	335406

Note: For possible combinations and configurations, see the «Installation Positions» section

(1) Normally closed contact with delayed opening
(2) Normally open contact with advance closure

Interlock modules for contactors

Appearance	Compatible devices	Type	Mounting method	Product name	Code
	F-09..F-38 and FR	Mechanical	Side	OptiStart K-FX-5000 (1)	335361
	(A)F-40..(A)F-94	Mechanical	Side	OptiStart K-FX-5300	335365
	(A)F-95..(A)F-150	Mechanical	Side	OptiStart K-FX-5400	335368
	F-09..F-38 and FR	Electromechanical	Side	OptiStart K-FX-5001 (1)	335362
	(A)F-40..(A)F-94	Electromechanical	Side	OptiStart K-FX-5301	335366
	(A)F-95..(A)F-150	Electromechanical	Side	OptiStart K-FX-5401	335369

Appearance	Compatible devices	Type	Mounting method	Product name	Code
	F-09..F-38 and FR	Mechanical	Front	OptiStart K-FX-5003	335364
	(A)F-40..(A)F-94	Mechanical	Front	OptiStart K-FX-5303	335367
	(A)F-95..(A)F-150	Mechanical	Front	OptiStart K-FX-5403	335370
	F-09..F-38 and FR	Mechanical	Front with side attachment	OptiStart K-FX-5002	335363
	AF-160..AF-230	Mechanical	Side	OptiStart K-FX-5500	335371
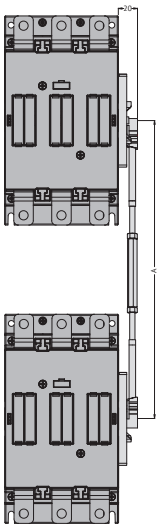	AF-160..AF-400	Mechanical	Vertical	OptiStart K-FX-5503	335372
	AF-160..AF-400	Mechanical	Vertical	OptiStart K-FX-5504	335373
	F-500...F-1000	Mechanical	Side	OptiStart K-FX-355	335407
	F-500...F-1000	Mechanical	Vertical *	OptiStart K-FX-3566 (2)	335413

(1) Interlocking of contactors of different sizes is possible, for example F-09..F-25 and F-26...F-38.
(2) For permissible axle spacing and combinations, see the «Installation Positions» section.

Pneumatic time adapter for contactors (1) (2)

Appearance	Compatible devices	Type of delay	Maximum time	Product name	Code
	F-09..(A)F-150 and FR	Upon activation	3 s	OptiStart K-FX-4853	335306
	F-09..(A)F-150 and FR	Upon activation	6 s	OptiStart K-FX-4856	335308
	F-09..(A)F-150 and FR	Upon activation	15 s	OptiStart K-FX-48515	335305
	F-09..(A)F-150 and FR	Upon activation	30 s	OptiStart K-FX-48530	335307
	F-09..(A)F-150 and FR	Upon activation	60 s	OptiStart K-FX-48560	335309
	F-09..(A)F-150 and FR	Upon activation	120 s	OptiStart K-FX-485120	335304
	F-09..(A)F-150 and FR	Upon deactivation	3 s	OptiStart K-FX-4863	335312
	F-09..(A)F-150 and FR	Upon deactivation	6 s	OptiStart K-FX-4866	335314
	F-09..(A)F-150 and FR	Upon deactivation	15 s	OptiStart K-FX-48615	335311
	F-09..(A)F-150 and FR	Upon deactivation	30 s	OptiStart K-FX-48630	335313
	F-09..(A)F-150 and FR	Upon deactivation	60 s	OptiStart K-FX-48660	335315
	F-09..(A)F-150 and FR	Upon deactivation	120 s	OptiStart K-FX-486120	335310
	F-09..(A)F-150 and FR	Upon deactivation	70 ms	OptiStart K-FX-487	335316

Note: For possible combinations and configurations, see the «Installation Positions» section

(1) Protection degree IP20 is ensured when conductors with a cross-section of at least 1 mm² are connected. Mechanical wear resistance is limited to 3 mln cycles.
(2) When OptiStart K-FX-358 adapter is used, installation on F-250...F-1000 contactors is possible.

Surge arresters

Appearance	Compatible devices	Type	Rated voltage	Product name	Code
	F-09..(A)F-150 and FR	Variable resistor	up to 48 V AC/DC	OptiStart K-FX-77048	335385
	F-09..(A)F-150 and FR	Variable resistor	48–125 V AC/DC	OptiStart K-FX-77125	335386
	F-09..(A)F-150 and FR	Variable resistor	125–240 V AC/DC	OptiStart K-FX-77240	335387
	F-09..(A)F-150 and FR	RC	до 48 V AC/DC	OptiStart K-FX-79048	335388
	F-09..(A)F-150 and FR	RC	48–125 V AC/DC	OptiStart K-FX-79125	335389
	F-09..(A)F-150 and FR	RC	125–240 V AC/DC	OptiStart K-FX-79240	335390
	F-09..(A)F-150 and FR	RC	240–415 V AC/DC	OptiStart K-FX-79415	335391

Fourth power pole

Appearance	Compatible devices	Contactor control coil	Product name	Code
	F-26..F-38	AC	OptiStart K-FX-42	335358
	F-26..F-38	DC	OptiStart K-FX-D42	335402
	(A)F-40..(A)F-94	AC	OptiStart K-FX-43	335359
	(A)F-95..(A)F-150	AC	OptiStart K-FX-44	335360

Mechanical latches

Appearance	Compatible devices	Rated voltage	Product name	Code
	F-09..F-38 and FR	24 V AC	OptiStart K-FX-22224	335262
	F-09..F-38 and FR	48 V AC	OptiStart K-FX-22248	335264
	F-09..F-38 and FR	110 V AC	OptiStart K-FX-222110	335260
	F-09..F-38 and FR	220 V AC	OptiStart K-FX-222220	335261
	F-09..F-38 and FR	380 V AC	OptiStart K-FX-222380	335263
	F-09..F-38 and FR	12 V DC	OptiStart K-FX-222C12	335266
	F-09..F-38 and FR	24 V DC	OptiStart K-FX-222C24	335268
	F-09..F-38 and FR	48 V DC	OptiStart K-FX-222C48	335269
	F-09..F-38 and FR	110 V DC	OptiStart K-FX-222C110	335265
	F-09..F-38 and FR	220 V DC	OptiStart K-FX-222C220	335267
	(A)F-40..(A)F-94	24 V AC	OptiStart K-FX-27224	335274
	(A)F-40..(A)F-94	48 V AC	OptiStart K-FX-27248	335276
	(A)F-40..(A)F-94	110 V AC	OptiStart K-FX-272110	335272
	(A)F-40..(A)F-94	220 V AC	OptiStart K-FX-272220	335273
	(A)F-40..(A)F-94	380 V AC	OptiStart K-FX-272380	335275
	(A)F-40..(A)F-94	12 V DC	OptiStart K-FX-272C12	335278
	(A)F-40..(A)F-94	24 V DC	OptiStart K-FX-272C24	335280
	(A)F-40..(A)F-94	48 V DC	OptiStart K-FX-272C48	335281
	(A)F-40..(A)F-94	110 V DC	OptiStart K-FX-272C110	335277
	(A)F-40..(A)F-94	220 V DC	OptiStart K-FX-272C220	335279
	(A)F-95..(A)F-150	24 V AC	OptiStart K-FX-641024	335374
	(A)F-95..(A)F-150	48 V AC	OptiStart K-FX-641048	335375
	(A)F-95..(A)F-150	110 V AC	OptiStart K-FX-641110	335376

Appearance	Compatible devices	Номинальное напряжение	Product name	Code
	(A)F-95..(A)F-150	230 V AC	OptiStart K-FX-641230	335377
	(A)F-95..(A)F-150	380 V AC	OptiStart K-FX-641380	335378
	(A)F-95..(A)F-150	12 V DC	OptiStart K-FX-641D012	335379
	(A)F-95..(A)F-150	24 V DC	OptiStart K-FX-641D024	335380
	(A)F-95..(A)F-150	48 V DC	OptiStart K-FX-641D048	335381
	(A)F-95..(A)F-150	110 V DC	OptiStart K-FX-641D110	335382
	(A)F-95..(A)F-150	220 V DC	OptiStart K-FX-641D230	335383

Connection adapters

Appearance	Compatible devices	Type	Interlock module	Product name	Code
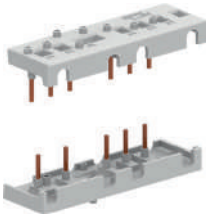	F-09..F-25	Reversing	FX-5002, FX-5003	OptiStart K-FX-3101	335338
	F-09..F-25	Reversing	FX-5000, FX-5001	OptiStart K-FX-3102	335339
	F-26..F-38	Reversing	FX-5000, FX-5001, FX-5002, FX-5003	OptiStart K-FX-3201	335341
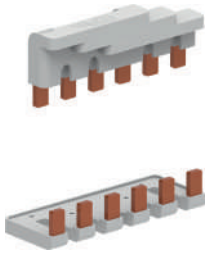	(A)F-40..(A)F-94	Reversing	FX-5303	OptiStart K-FX-3301	335344
	(A)F-95..(A)F-150	Reversing	FX-5403	OptiStart K-FX-3401	335352
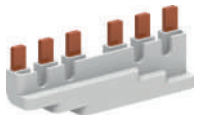	(A)F-40-30..(A)F-94-30	Parallel	FX-5300, FX-5301	OptiStart K-FX-3361	335347
	(A)F-95-30..(A)F-150-30	Parallel	FX-5400, FX-5401	OptiStart K-FX-3461	335355
	(A)F-40-40..(A)F-94-40	Parallel	FX-5300, FX-5301	OptiStart K-FX-3371	335348
	(A)F-95-40..(A)F-150-40	Parallel	FX-5400, FX-5401	OptiStart K-FX-3471	335356
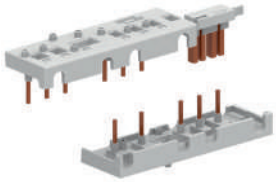	F-09..F-25	Star-Delta	-	OptiStart K-FX-3131	335340
	F-26..F-38	Star-Delta	-	OptiStart K-FX-3231	335342
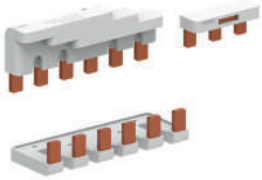	(A)F-40..(A)F-94	Star-Delta	-	OptiStart K-FX-3331	335345
	(A)F-95..(A)F-150	Star-Delta	-	OptiStart K-FX-3431	335353
	F-26..F-38 and F-09..F-25	Star-Delta	-	OptiStart K-FX-3232	335343

Appearance	Compatible devices	Type	Interlock module	Product name	Code
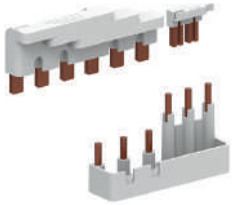	(A)F-40..(A)F-94 and F-26..F-38	Star-Delta	-	OptiStart K-FX-3332	335346
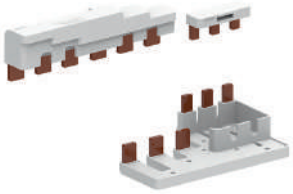	(A)F-95..(A)F-150 and (A)F-40..(A)F-94	Star-Delta	-	OptiStart K-FX-3432	335354

Jumpers for parallel pole connection

Appearance	Compatible devices	Number of poles	Availability of insulation	Product name	Code
	F-09..F-25 and FR	2	-	OptiStart K-FX-A135	335257
	F-26..F-38	2	-	OptiStart K-FX-A235	335258
	(A)F-40..(A)F-94	2	-	OptiStart K-FX-3392	335349
	(A)F-95..(A)F-150	2	-	OptiStart K-FX-3492	335357
	AF-160...AF-230	2	-	OptiStart K-FX-3592	370967
	AF-265...AF-400	2	-	OptiStart K-FX-3692	370969
	F-500..F-1000	2	-	OptiStart K-FX-A1845	335403
	(A)F-40..(A)F-94	3	-	OptiStart K-FX-3393	335350
	(A)F-40..(A)F-94	3	+	OptiStart K-FX-3399 (1)	335351
	(A)F-95..(A)F-150	3	-	OptiStart K-FX-A435	335259
	AF-160...AF-230	3	-	OptiStart K-FX-3593	370968
	AF-265...AF-400	3	-	OptiStart K-FX-3693	370970
	F-500..F-1000	3	-	OptiStart K-FX-A1846	335404

(1) Tightening torque is 13 Nm. Tool: Hex wrench 6

Protective cover

Appearance	Compatible devices	Number of poles	Product name	Code
	(A)F-40..(A)F-94	3	OptiStart K-FX-833	335395
	(A)F-95..(A)F-150	3	OptiStart K-FX-834	335396
	AF-160..AF-230	1	OptiStart K-FX-815	335394
	AF-265...AF-400	1	OptiStart K-FX-816	370959
	AF-160..AF-230	3	OptiStart K-FX-835	335397
	AF-265...AF-400	3	OptiStart K-FX-836	370960
	AF-160..AF-230	4	OptiStart K-FX-845	335398
	AF-265...AF-400	4	OptiStart K-FX-846	370961
	F-500-30	1	OptiStart K-FX-527	335424
	F-500-40	1	OptiStart K-FX-528	335425
	F-630-30; F-1000-30	1	OptiStart K-FX-529	335426
	F-630-40; F-1000-40	1	OptiStart K-FX-530	335427

Adapters for increasing the terminal cross-section

Appearance	Compatible devices	Cross-section, mm²	Product name	Code
	F-09..F-25	6	OptiStart K-FX-231 (1)	335270
	F-26..F-38	16	OptiStart K-FX-232 (2)	335271

(1) Tightening torque 1.5...1.8 Nm. Tool: PH 1
(2) Tightening torque 2.5...3.0 Nm. Tool: PH 2

Other accessories

Appearance	Compatible devices	Type	Product name	Code
	F-09..F-38 and FR	Manual closing module	OptiStart K-FX-454	335292
	(A)F-40..(A)F-94	Manual closing module	OptiStart K-FX-455	335293
	(A)F-95..(A)F-150	Manual closing module	OptiStart K-FX-642	335384
	F-09..F-38	Conversion into FK-09..FK-38 kit	OptiStart K-FX-460	335294
	(A)F-40..(A)F-94	Conversion into (A)FK-40..(A) FK-94 kit	OptiStart K-FX-10K3	335329
	(A)F-95..(A)F-110	Conversion into (A)FK-95..(A) FK-110 kit	OptiStart K-FX-10K4	335330
	F-09..F-38	Adapter for connection of reversing contactors	OptiStart K-FX-8910	335401
	F-09..F-38 and FR	Plastic brackets for screw mounting	OptiStart K-FX-8902	335400
	F-09..F-38 and FR	Sealing cover	OptiStart K-FX-80	335392
	F-09..F-38 and FR	Plastic base for screw mounting	OptiStart K-FX-8901	335399
	AF-160..AF-230	Interphase partition	OptiStart K-FX-805	335393
	F-09..(A)F-150 and FR	Nameplate for inscriptions	OptiStart K-FX-30	335337
	FX-10.. / 484.. / 485.. / 486.. / 487	Adapter for auxiliary contacts mounting on F-250..F-1000	OptiStart K-FX-358	335414
	F-250...F-1000	OptiStart K-FX-370 adapter for conversion of faston terminals of the coil and auxiliary contacts to screw terminals	OptiStart K-FX-370	335415
	F-250...F-1000	OptiStart K-FX-371 adapter for conversion of faston coil terminals to screw terminals	OptiStart K-FX-371 (1)	335416

(1) Tightening torque 1 Nm,. Tool: PH 2. Maximum cross-section of connected conductor: 4 mm^2

Spare parts

Control coils

Appearance	Compatible devices	Rated voltage	Product name	Code
	F-09..F-25 and FR	24 V AC	OptiStart K-FS-91A024	335882
	F-09..F-25 and FR	48 V AC	OptiStart K-FS-91A048	335883
	F-09..F-25 and FR	110 V AC	OptiStart K-FS-91A110	335884
	F-09..F-25 and FR	230 V AC	OptiStart K-FS-91A230	335885
	F-09..F-25 and FR	400 V AC	OptiStart K-FS-91A400	335886
	F-26..F-38	24 V AC	OptiStart K-FS-92A024	335887
	F-26..F-38	48 V AC	OptiStart K-FS-92A048	335888
	F-26..F-38	110 V AC	OptiStart K-FS-92A110	335889
	F-26..F-38	230 V AC	OptiStart K-FS-92A230	335890
	F-26..F-38	400 V AC	OptiStart K-FS-92A400	335891
	F-40..F-94	24 V AC	OptiStart K-FS-93A024	335892
	F-40..F-94	48 V AC	OptiStart K-FS-93A048	335893
	F-40..F-94	110 V AC	OptiStart K-FS-93A110	335894
	F-40..F-94	230 V AC	OptiStart K-FS-93A230	335895
	F-40..F-94	400 V AC	OptiStart K-FS-93A400	335896
	F-95..F-150	24 V AC	OptiStart K-FS-94A024	335900
	F-95..F-150	48 V AC	OptiStart K-FS-94A048	335901
	F-95..F-150	110 V AC	OptiStart K-FS-94A110	335902
	F-95..F-150	230 V AC	OptiStart K-FS-94A230	335903
	F-95..F-150	400 V AC	OptiStart K-FS-94A400	335904
	AF-40..AF-94	24–60 V AC / 20-60 V DC	OptiStart K-FS-93E024	335897
	AF-40..AF-94	60–130 V AC/DC	OptiStart K-FS-93E110	335898
	AF-40..AF-94	100–250 V AC/DC	OptiStart K-FS-93E230	335899
	AF-95..AF-150	24–60 V AC / 20–60 V DC	OptiStart K-FS-94E024	335905
	AF-95..AF-150	60–130 V AC/DC	OptiStart K-FS-94E110	335906
	AF-95..AF-150	100–250 V AC/DC	OptiStart K-FS-94E230	335907
	AF-160..AF-230	24–60 V AC / 20–60 V DC	OptiStart K-FS-95E024	335908
	AF-160..AF-230	60–130 V AC/DC	OptiStart K-FS-95E110	335909
	AF-160..AF-230	100–250 V AC/DC	OptiStart K-FS-95E230	335910
	AF-160..AF-230	250–500 V AC/DC	OptiStart K-FS-95E400	335911
	AF-265..AF-400	24–60 V AC / 20–60 V DC	OptiStart K-FS-96E024	370947
	AF-265..AF-400	60–130 V AC/DC	OptiStart K-FS-96E110	370948
	AF-265..AF-400	100–250 V AC/DC	OptiStart K-FS-96E230	370949
	AF-265..AF-400	250–500 V AC/DC	OptiStart K-FS-96E400	370950

Appearance	Compatible devices	Rated voltage	Product name	Code
	F-500..F-1600	48 V AC/DC	OptiStart K-FS-79648	335962
	F-500..F-1600	110 V AC/DC	OptiStart K-FS-796110	335958
	F-500..F-1600	220 V AC/DC	OptiStart K-FS-796220	335959
	F-500..F-1600	380 V AC/DC	OptiStart K-FS-796380	335960
	F-500..F-1600	440 V AC/DC	OptiStart K-FS-796440	335961
	F-500..F-1000	48 V AC/DC	OptiStart K-FS-80048	335981
	F-500..F-1000	110 V AC/DC	OptiStart K-FS-800110	335977
	F-500..F-1000	220 V AC/DC	OptiStart K-FS-800220	335978
	F-500..F-1000	380 V AC/DC	OptiStart K-FS-800380	335979
	F-500..F-1000	440 V AC/DC	OptiStart K-FS-800440	335980

Power contacts

Appearance	Compatible devices	Number of poles	Product name	Code
	F-26	4	OptiStart K-FS-99026F	335912
	F-26	3	OptiStart K-FS-99026T	335913
	F-32	3	OptiStart K-FS-99032T	335914
	F-38	4	OptiStart K-FS-99038F	335915
	F-38	3	OptiStart K-FS-99038T	335916
	(A)F-40	4	OptiStart K-FS-99040F	335917
	(A)F-40	3	OptiStart K-FS-99040T	335918
	(A)F-50	4	OptiStart K-FS-99050F	335919
	(A)F-50	3	OptiStart K-FS-99050T	335920
	(A)F-65	4	OptiStart K-FS-99065F	335921
	(A)F-65	3	OptiStart K-FS-99065T	335922
	(A)F-80	4	OptiStart K-FS-99080F	335923
	(A)F-80	3	OptiStart K-FS-99080T	335924
	(A)F-94	3	OptiStart K-FS-99094T	335925
	(A)F-95	4	OptiStart K-FS-99095F	335926
	(A)F-95	3	OptiStart K-FS-99095T	335927
	(A)F-115	4	OptiStart K-FS-99115F	335928
	(A)F-115	3	OptiStart K-FS-99115T	335929
	(A)F-150	4	OptiStart K-FS-99150F	335930
	(A)F-150	3	OptiStart K-FS-99150T	335931
	AF-265	4	OptiStart K-FS-99265F	370953
	AF-265	3	OptiStart K-FS-99265T	370954
	AF-330	4	OptiStart K-FS-99330F	370955
	AF-330	3	OptiStart K-FS-99330T	370956
	AF-400	4	OptiStart K-FS-99400F	370957
	AF-400	3	OptiStart K-FS-99400T	370958
	F-500	3	OptiStart K-FS-525	335996
	F-500	4	OptiStart K-FS-5254	335997
	F-630	3	OptiStart K-FS-526	335998
	F-630	4	OptiStart K-FS-5264	336001
	F-1000	3	OptiStart K-FS-537	335999
	F-1000	4	OptiStart K-FS-5374	336000
	F-1250	3	OptiStart K-FS-538	335982
	F-1600	3	OptiStart K-FS-539	335986

Other spare parts

Appearance	Compatible devices	Type	Product name	Code
	AF-265-30..AF-400-30	Arc chute	OptiStart K-FS-9806F	370952
	AF-265-40..AF-400-40	Arc chute	OptiStart K-FS-9806T	370951
	F-500-30..F-1000-30	Arc chute	OptiStart K-FS-838	335939
	F-500-40..F-1000-40	Arc chute	OptiStart K-FS-839	335940
	F-500..F-1000	Protective casing for coil	OptiStart K-FS-803	335943

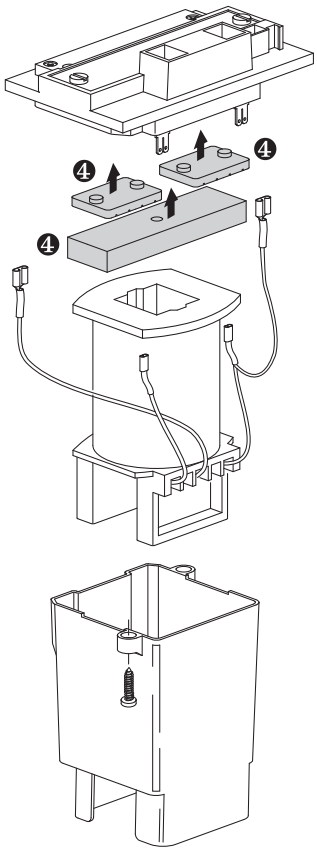

Maximum combination of optional accessories

Contactor relays FR with AC coil
Contactors F-09...F-150 with AC coil
Contactors AF-40...AF-150

		Front installation						Side installation						Front installation with side mount		
		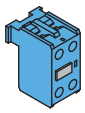	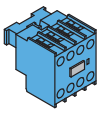	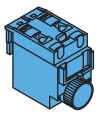		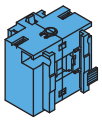		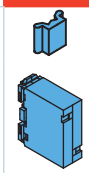	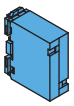				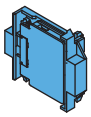		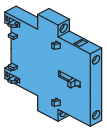
		FX-1002 FX-1011 FX-1020	FX-1004 FX-1013 FX-1022 FX-1031 FX-1040	FX-485... FX-486... FX-487...		FX-222... (4) FX-272... (4) FX-641... (4)		FX-5002 FX-5003 (1)	FX-5303 FX-5403 (8)		FX-418... FX-218 FX-481... FX-482		FX-428... FX-419 + FX-418... FX-280 + FX-218 FX-483 + FX-481... FX-483 + FX-482		FX-1202 FX-1211 FX-1220 FX-5000 (3)(7) FX-5001 (3)(7)
		number of units (one type only)				number of units		number of units (one type only)			number of units		number of units		number of units
Contactor relays	FR	1	1	1	or	1 (5)	+	1	–	or	1 or 2 (1)	or	1 or 2 (1)	or	1 (3)
Three-pole contactors	F-09...F-25	1	1	1		1 (5)		1	–		1 or 2 (1)		1 or 2 (1)		1 (3)
	F-26...F-38	1	1	1		1 (5)		1	–		1 or 2 (1)		1 or 2 (1)		1 (3)
	F-40...-F-150	1	1	1		1 (6)		–	1 (9)		1 or 2 (1)		2		1 (3)
	AF-40...-AF-150	1	1	1		1 (6)		–	1 (9)		1 or 2 (1)		2		1 (3)
Four-pole contactors	F-09...F-25	1	1	1		1 (5)		1	–		1 or 2		1 or 2 (1)		1 (3)
	F-26...F-38	1	1	1		1 (5)		1 (2)	–		1 (1)		1 or 2 (1)		1 (3)
	F-40...-F-150	1	1	1		1 (6)		–	1 (9)		1 or 2		2		1 (3)
	AF-40...-AF-150	1	1	1		1 (6)		–	1 (9)		1 or 2		2		2

(1) Installation is impossible if FX-10... is available with 4 contacts and FX-222.
(2) To install the interlock module, the fourth pole should be shifted so that it is on the outer side, in relation to the interlock, of one of two contactors being interlocked.
(3) When installing FX-500..., only one front-mounted unit with side attachment can be installed per interlocked contactor
(4) Another contact unit FX-10... or pneumatic time adapter FX-48.... can be installed on top of mechanical interlock FX-222, FX-272 and FX-641
(5) Mechanical lock FX-222.
(6) Key lock FX-272 for (A)F-40...(A)F-80; FX-641 for (A)F-95...(A)F-150.
(7) For (A)F-40...(A)F-94, FX-5300 or FX-5301 should be used; for (A)F-95...(A)F-150, FX-5400 or FX-5401 should be used.
(8) FX-5303 for (A)F-40...(A)F-94; FX-5403 for (A)F-95...(A)F-150.
(9) FX-5303 can not be installed if FX-10... unit with 4 contacts (FX-1004, FX-1013, FX-1022, FX-1031, FX-1040) is already installed on the front side.

Contactor relays FR with DC coil
Contactors F-09...F-38 with DC coil
Contactors F-09-Z...F-38-Z with DC coil with reduced power consumption

		Front installation											Side installation		Front installation with side mount		
		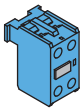			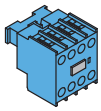				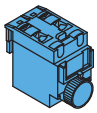		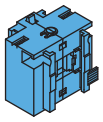			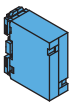	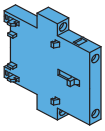		
		FX-10...			FX-10...				FX-485... FX-486... FX-487		FX-222... (3)		FX-50... (one type only)				BFX12... (2)
		...02	...11	...20	...04	...13	...22	...31	...40				...02	...03 (1)	...00	...01	
		number of units (one type only)									number of units		number of units (one type only)				
Contactor relays	FR...D	1			1		1			1	1	or +	1	1	1		1
Contactor relays	FR...Z	1			–		1			–	1		1	1	–		–
Three-pole contactors	F-09...F-25...D	1			1		1			1	1		1	1	1		1
Three-pole contactors	F-26...F-38...D	1			1		1			1	1		1	1	1		1
Three-pole contactors	F-09...F-25...Z	1			–		1			–	1		1	1	–		–
Three-pole contactors	F-26...F-38...Z	1			–		1			–	1		1	1	–		–
Four-pole contactors	F-09...F-25...D	1			1		1			1	1		1	1	1		1
Four-pole contactors	F-26...F-38...D	–	1		–		–			–	1		1 (4)	1 (4)	1		1
Four-pole contactors	F-09...F-25...Z	1			–		1			–	1		1	1	–		–
Four-pole contactors	F-26...F-38...Z	–	1		–		–			–	–		1 (4)	1 (4)	–		–

((1) Installation of FX-5003 interlock module is impossible if FX-10... is available with 4 contacts and FX-222.
(2) When installing FX-500..., only one front-mounted unit with side attachment can be installed per interlocked contactor
(3) Another contact unit FX-10... or pneumatic time adapter FX-48.... can be installed on top of mechanical interlock FX-222 and FX-641
(4) To install the interlock module, the fourth pole should be shifted so that it is on the outer side, in relation to the interlock, of one of two contactors being interlocked.

Installation positions of auxiliary contact units

Contactor relays FR with AC coil
Contactors F-09...F-150 with AC coil
Contactors AF-40...AF-150

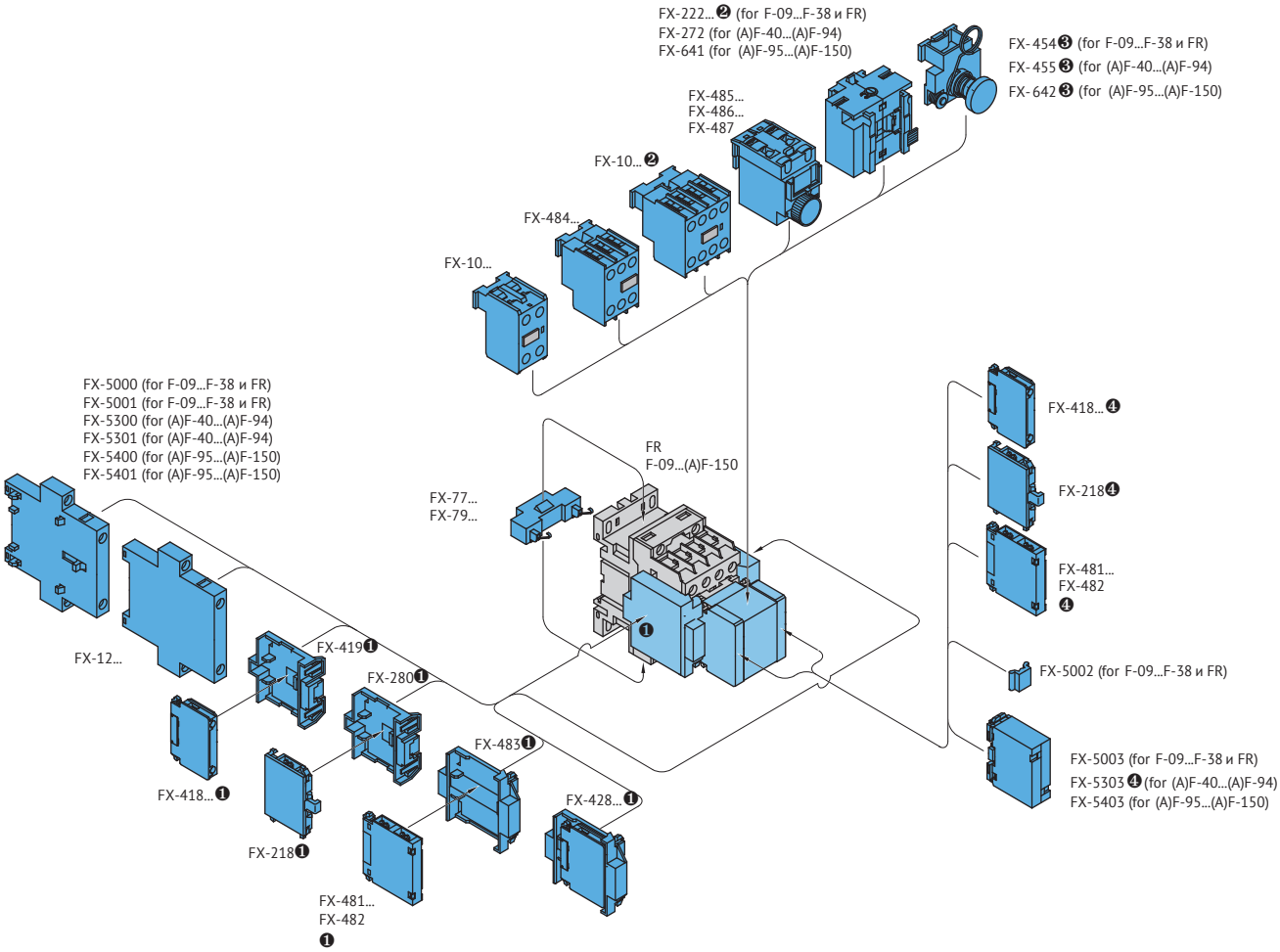

(1) Installation is impossible if a front-mounted unit with side attachment or mechanical interlock device FX-5000 or FX-5001 is available. For F-09...F-38 contactors and FR contactor relays, installation is impossible if FX-10... with 4 contacts and FX-222 are available.
(2) When installing FX-222... mechanical interlock on F-09...F-38 contactors and FR contactor relays, refer to the below drawing and table of maximum accessory combinations.
(3) If the FX-454 or FX-455 manual closing module is available, front mounting of any auxiliary unit is impossible.
(4) FX-5003 and FX-5303 can not be installed if FX-10... unit with 4 contacts (FX-1004, FX-1013, FX-1022, FX-1031, FX-1040) is already installed on the front side.

Contactor relays FR with AC coil and F-09...F-38 contactors with AC coil with installed mechanical latch FX-222...

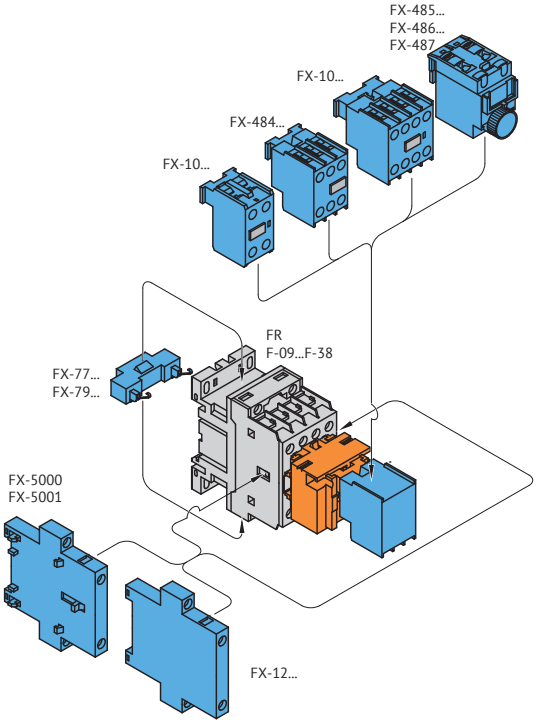

Contactors F-40...F-150 with AC coil and AF-40...AF-150 contactors with installed mechanical latch FX-272... or FX-641...

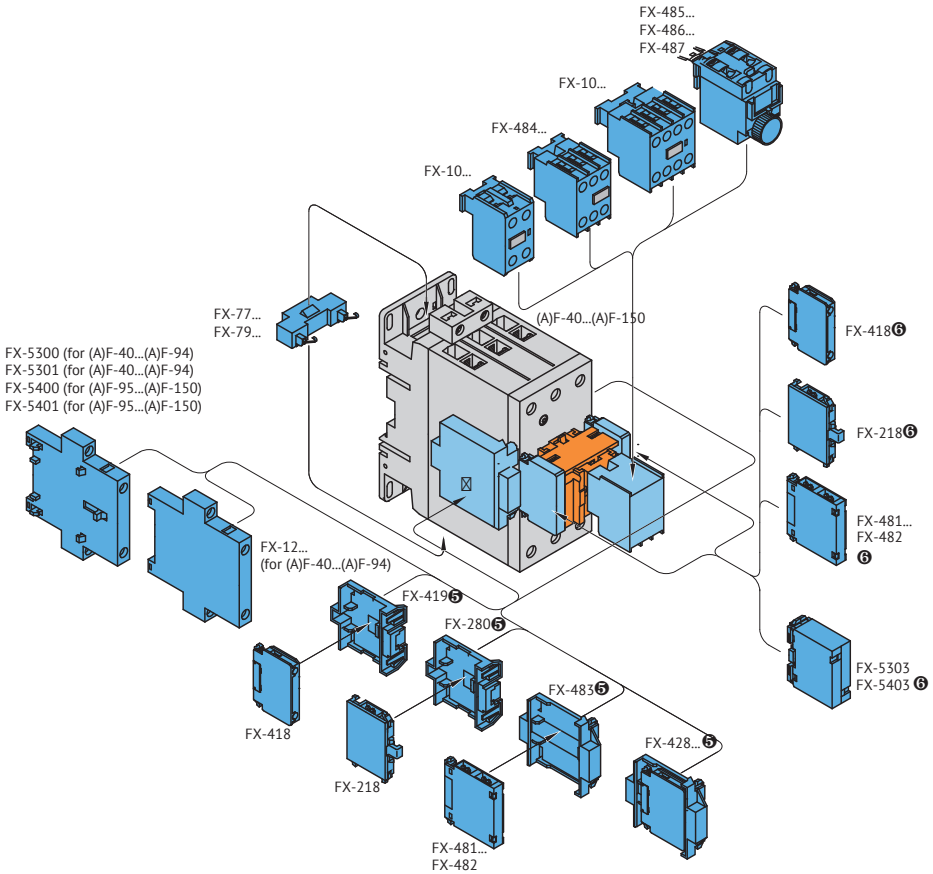

(5) Installation is impossible if a front-mounted unit with side attachment is available.
(6) Installation is only possible for (A)F-95...(A)F-150.

Contactor relays FR with DC coil
Contactors F-09...F-38 with DC coil
Contactors F-09-Z...F-38-Z with DC coil with reduced power consumption

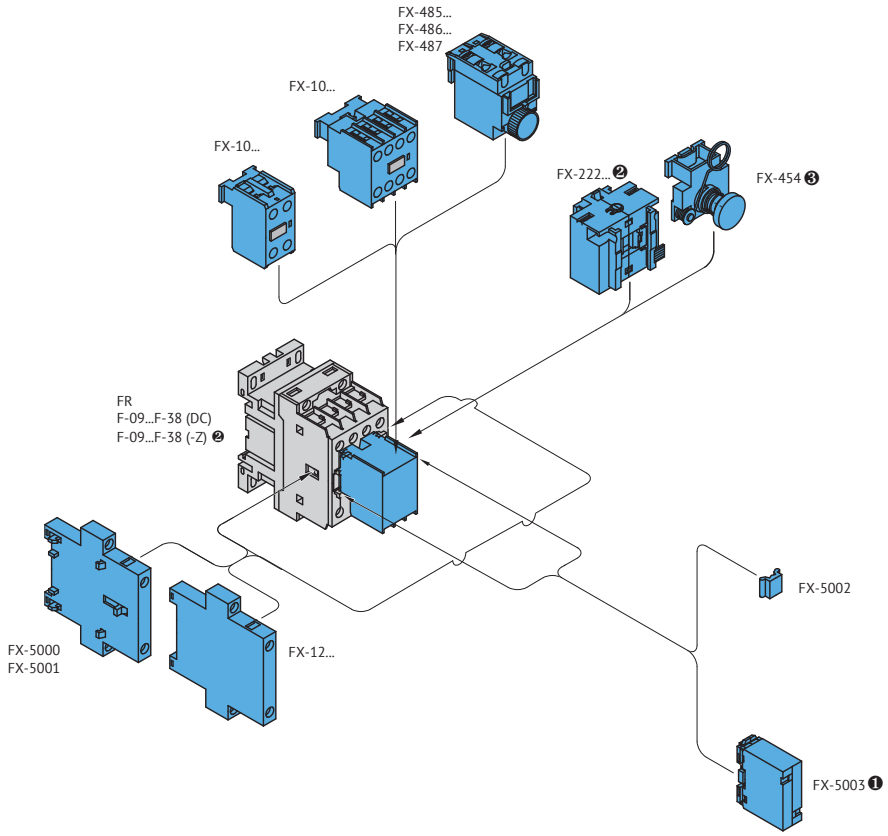

(1) Installation is impossible if mechanical lock FX-222... is available.
(2) It is not possible to install mechanical lock FX-222... on 4-pole contactors F-26-..Z...F-38-..Z with reduced power consumption.
(3) If the FX-454 manual closing module is available, front mounting of any auxiliary unit is impossible.

Installation positions of accessories

Possible assembly

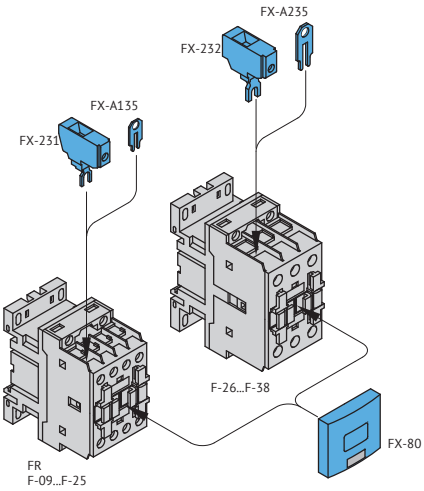

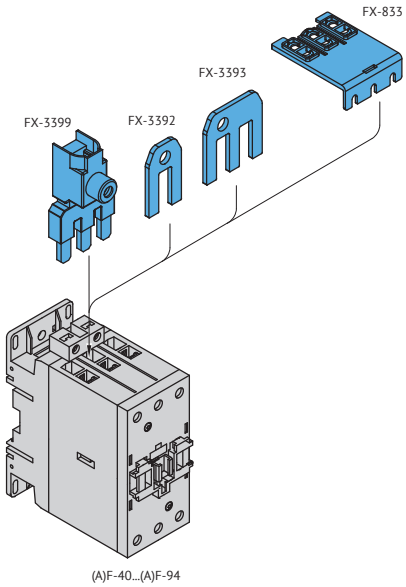

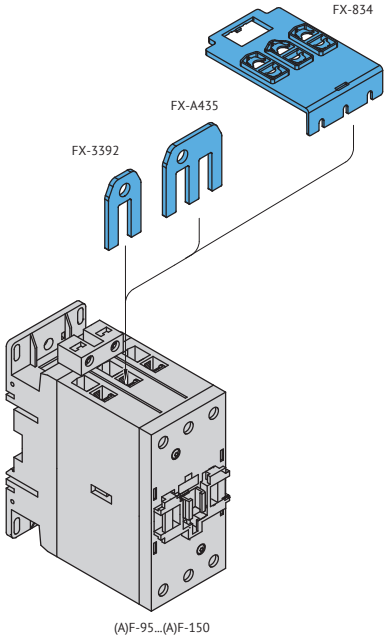

Connection adapters for reversing assemblies using F-09...F-25 contactors

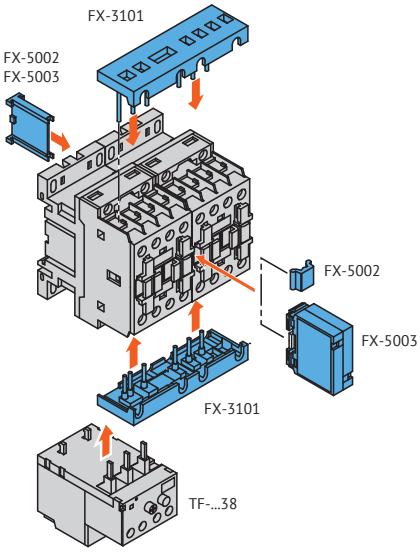

Connection adapters for reversing assemblies using F-09...F-25 contactors and FX-5000 or FX-5001 mechanical interlock

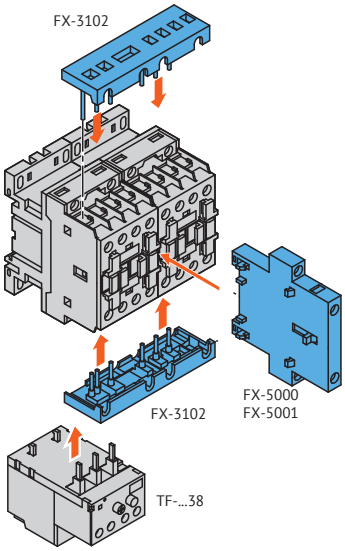

Connection adapters for reversing assemblies using F-26...F-38 contactors

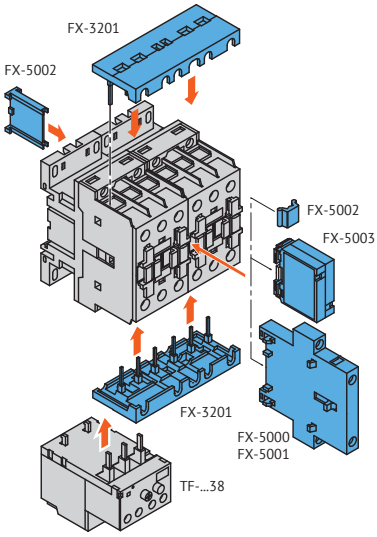

Connection adapters for reversing assemblies using (A)F-40...(A)F-94 contactors

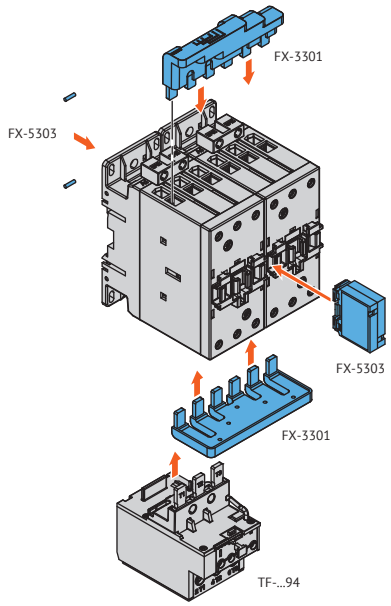

Connection adapters for reversing assemblies using (A)F-95...(A)F-150 contactors

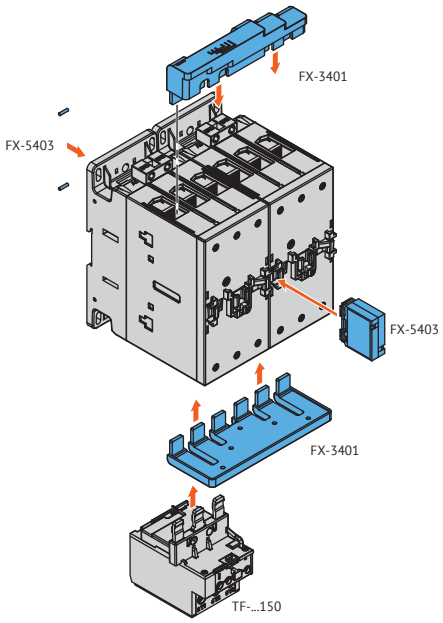

Connection adapters for star-delta assemblies using F-09...F-25 contactors

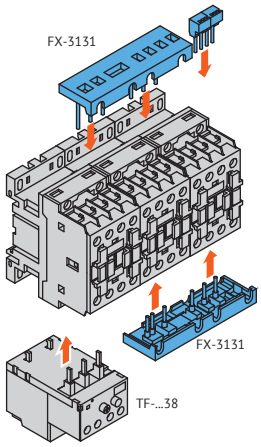

Connection adapters for star-delta assemblies using F-26...F-38 (delta) and F-09...F-25 (star) contactors

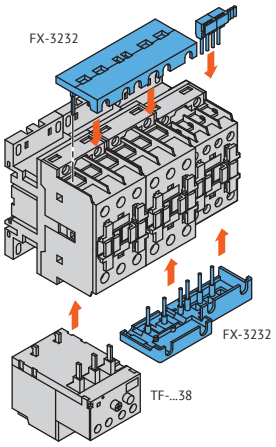

Connection adapters for star-delta assemblies using F-26...F-38 contactors

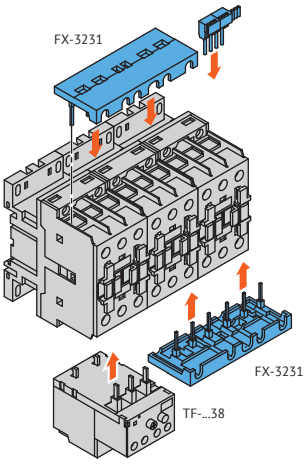

Connection adapters for star-delta assemblies using (A)F-40...(A)F-94 (delta) and F-26...F-38 (star) contactors

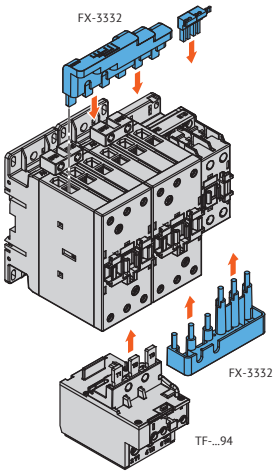

Connection adapters for star-delta assemblies using (A)F-40...(A)F-94 contactors

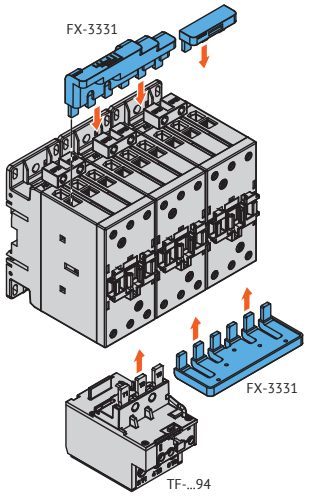

Connection adapters for star-delta assemblies using (A)F-95...(A)F-150 (delta) and (A)F-40...(A)F-94 (star) contactors

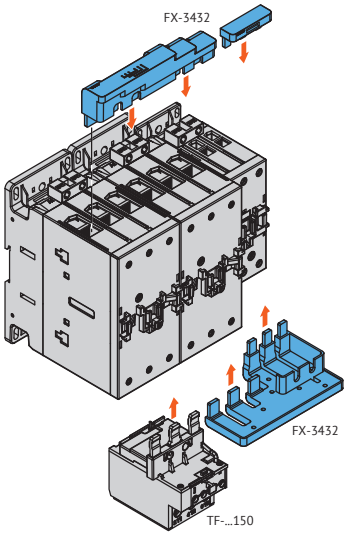

Connection adapters for star-delta assemblies using (A)F-95...(A)F-150 contactors

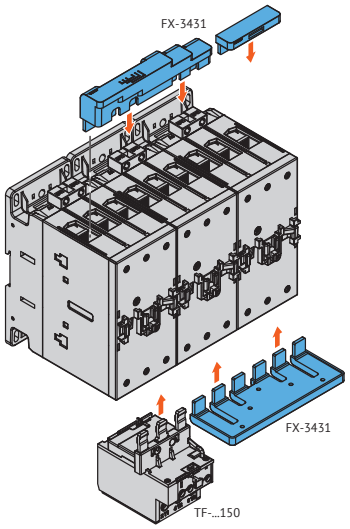

Connection adapters for parallel assemblies using (A)F-40...(A)F-94 contactors

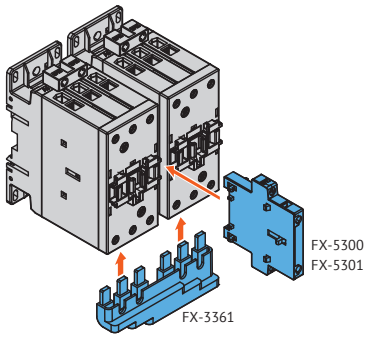

Connection adapters for parallel assemblies using (A)F-95...(A)F-150 contactors

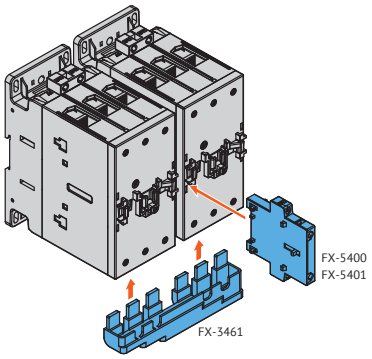

Connection adapters for parallel assemblies using (A)F-40...(A)F-80 four-pole contactors

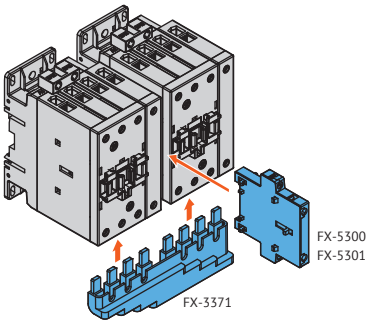

Connection adapters for parallel assemblies using (A)F-95...(A)F-150 four-pole contactors

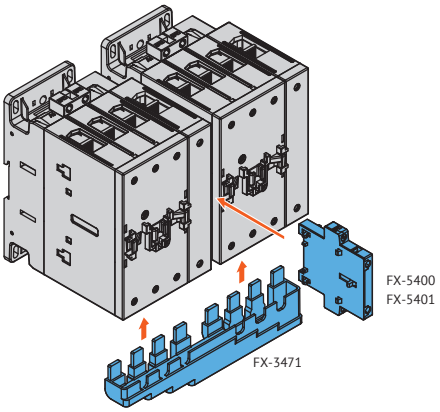

Installation positions of auxiliary contact units and accessories

Contactors AF-160 ... AF-400

Possible assembly

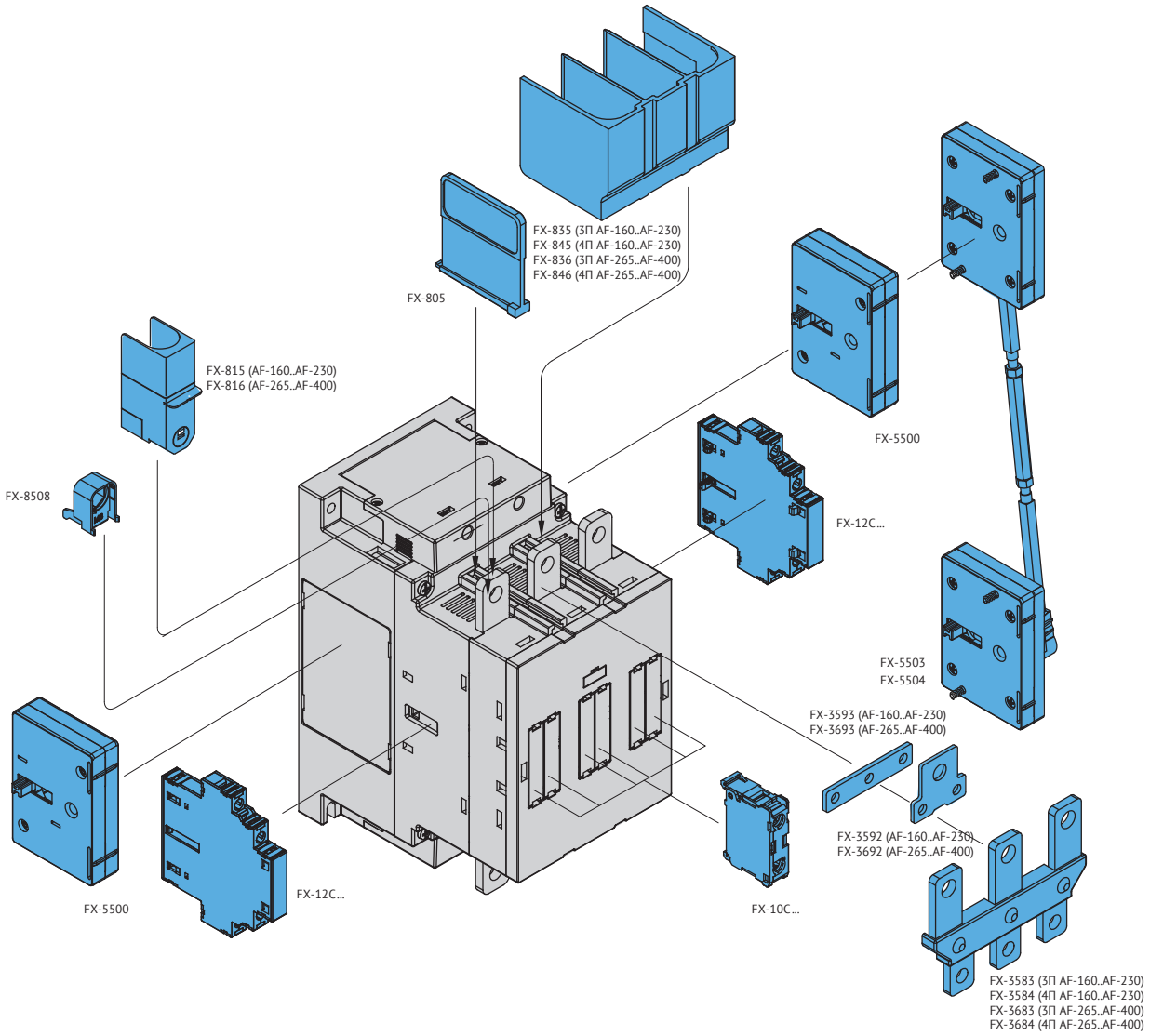

Contactors F-500...F-1000

Possible assembly

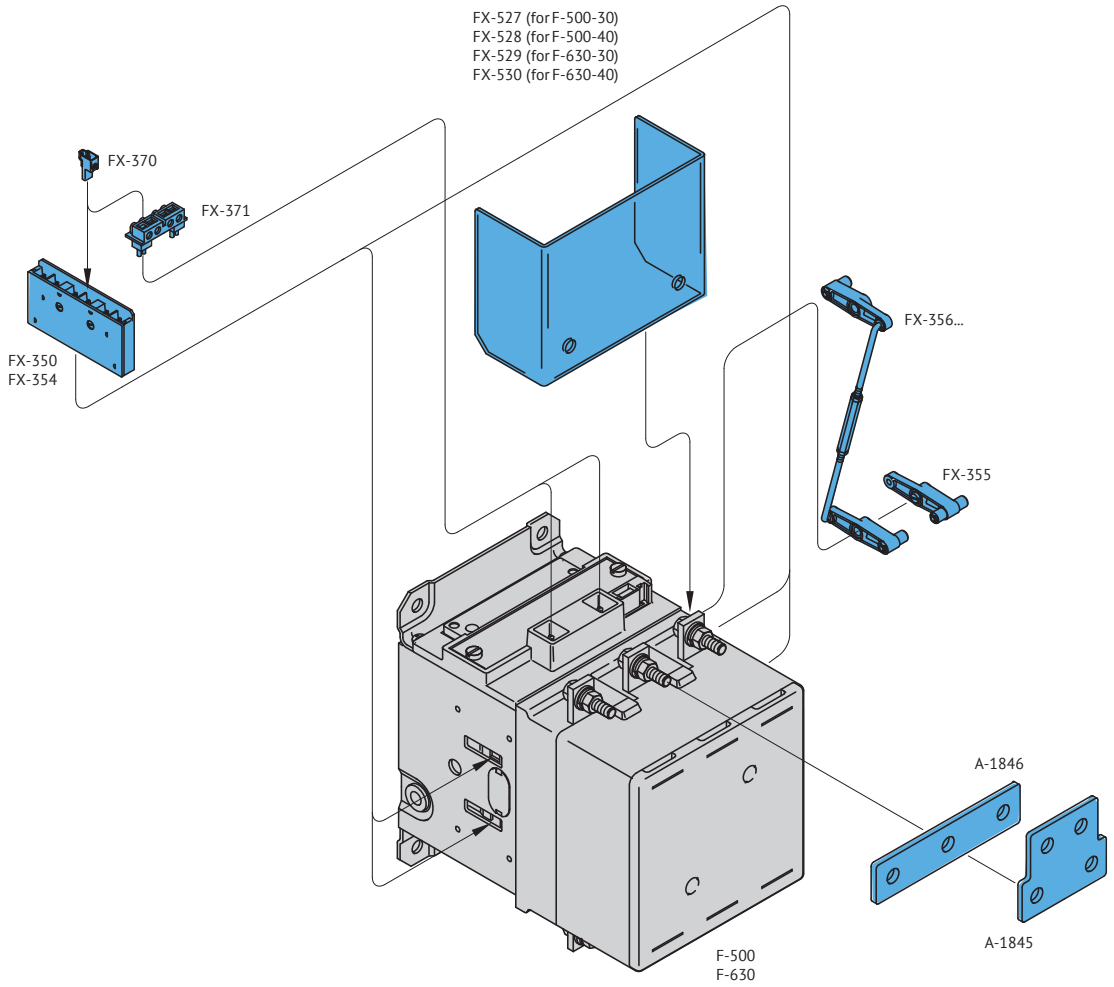

Additional auxiliary contacts FX-350 and FX-354 can be installed on contactors F-250...F-1000 in the amount of no more than 4 units per contactor (a total of 12 contacts maximum).

From unit FX-350, a combination of 2 NO + 1 NC or 1 NC + 2 NO contacts can be obtained depending on the installation position (see drawing), unit FX-354 includes 1 NO + 1 NC contacts.

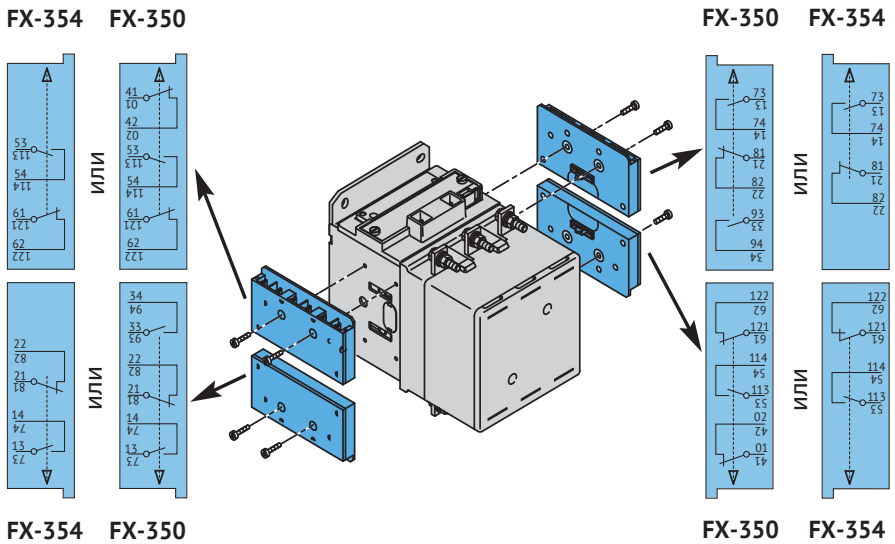

With FX-358 adapter, auxiliary contacts FX-10... with 2 contacts and FX-484..., pneumatic time delay attachments FX-485..., FX-486... and FX-487 can be installed. Four (4) adapters FX-358 can be installed on the contactors. One unit FX-10..., FX-484..., FX-485..., FX-486... and FX-487 can be installed on each FX-358 adapter.

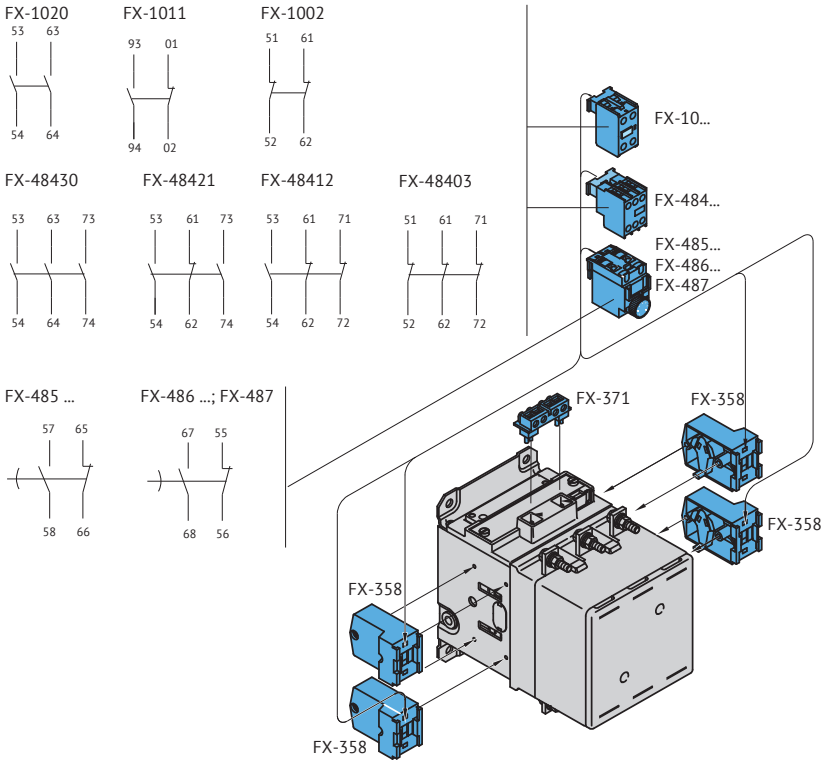

Overall dimensions (mm)

Contactor relays FR with AC coil
Three-pole contactors F-09...F-25 with AC coil and thermal relay TF-...38

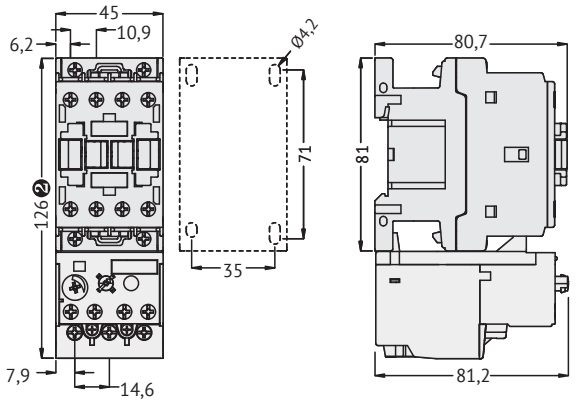

(2) 135 mm for TF-E..38

Four-pole contactors F-09...F-18 with AC coil

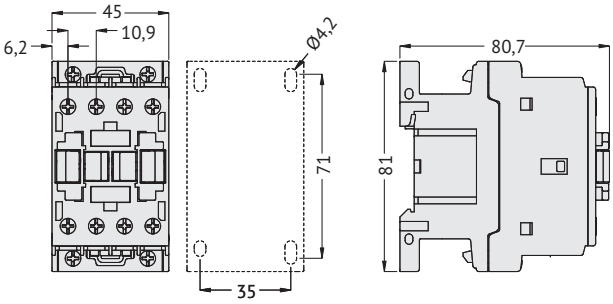

Three-pole contactors F-26...F-38 with AC coil and thermal relay TF-...38

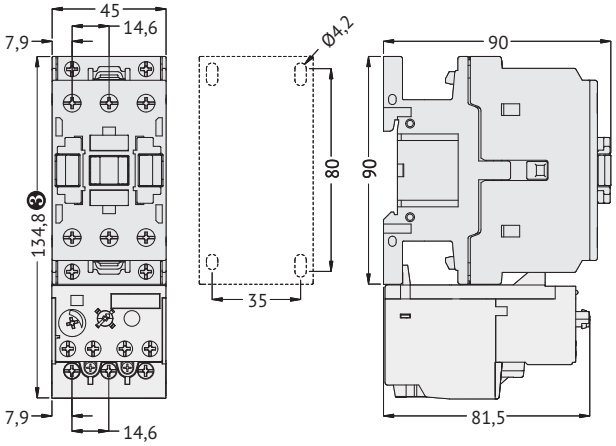

(3) 144 mm for TF-E..38

Four-pole contactors F-26...F-38 with AC coil

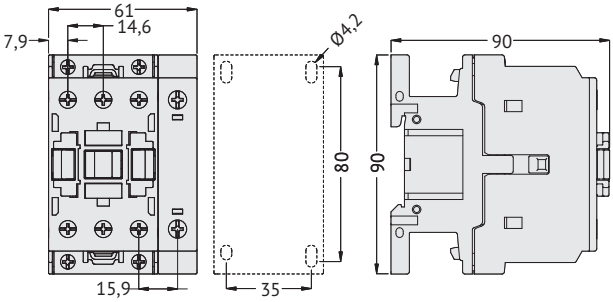

Contactor relays FR with DC coil
Three-pole contactors F-09...F-25 with DC coil and thermal relay TF-...38

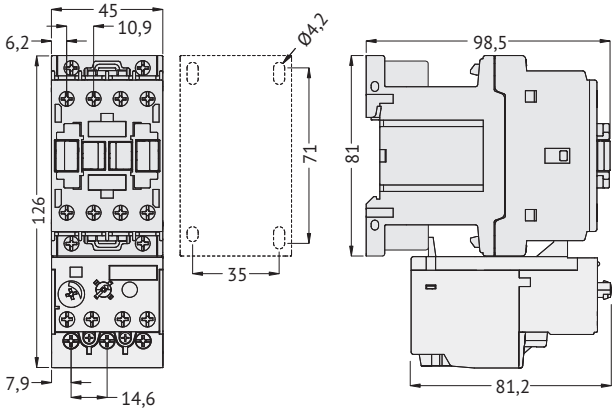

Four-pole contactors F-09...F-18 with DC coil

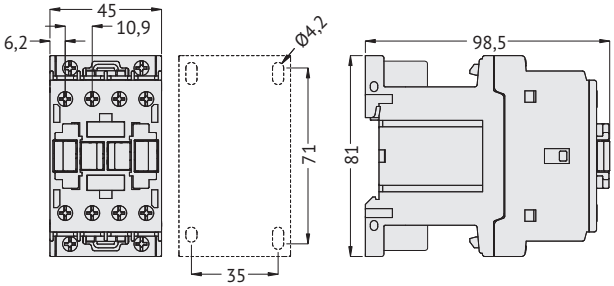

Three-pole contactors F-26...F-38 with DC coil and thermal relay TF-...38

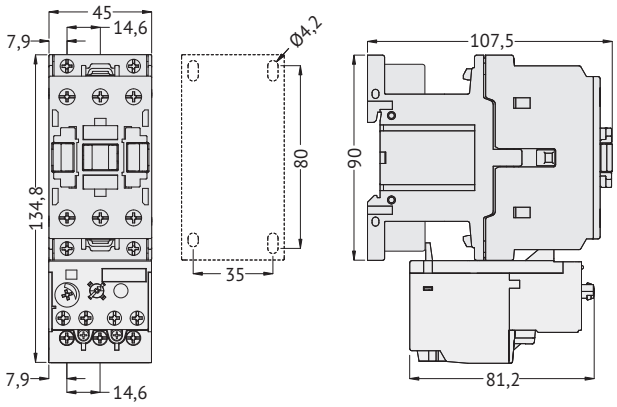

Four-pole contactors F-26...F-38 with DC coil

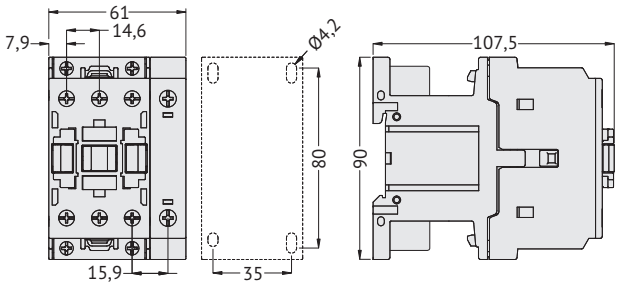

Three-pole contactors F-40...F-94 with AC coil and thermal relay TF-...94
Three-pole contactors AF-40...AF-94 with AC/DC coil and thermal relay TF-...94

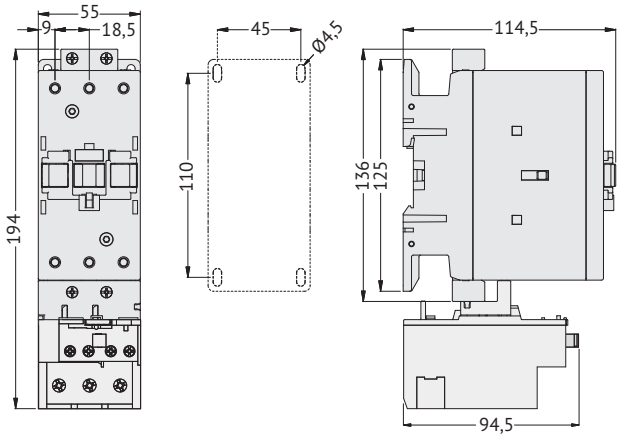

Four-pole contactors F-40...F-80 with AC coil
Four-pole contactors AF-40...AF-80 with AC/DC coil
Contactors FD-65, FD-80

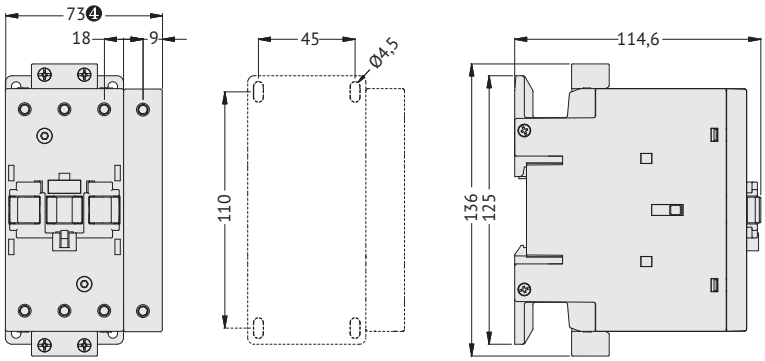

(4) 91 mm for A(F)-80-22... ; 55 mm for FD65 and FD80

Three-pole contactors F-95...F-150 with AC coil and thermal relay TF-...150
Three-pole contactors AF-95...AF-150 with AC/DC coil and thermal relay TF-...150

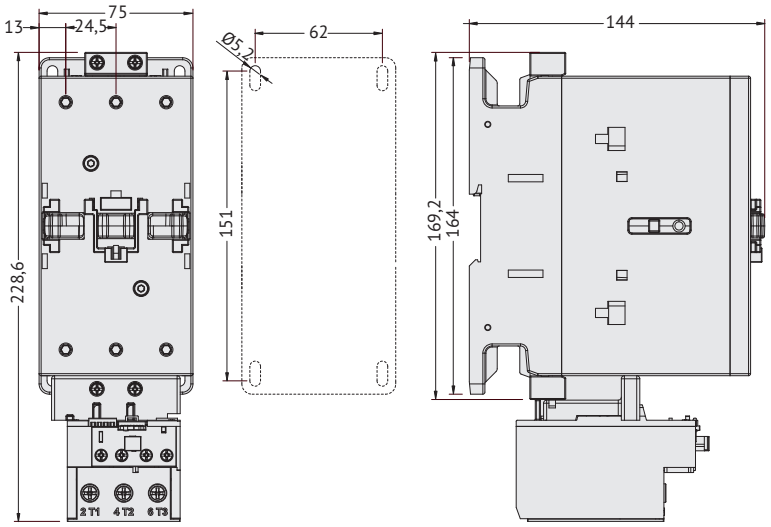

Four-pole contactors F-95...F-150 with AC coil
Four-pole contactors AF-95...AF-150 with AC/DC coil

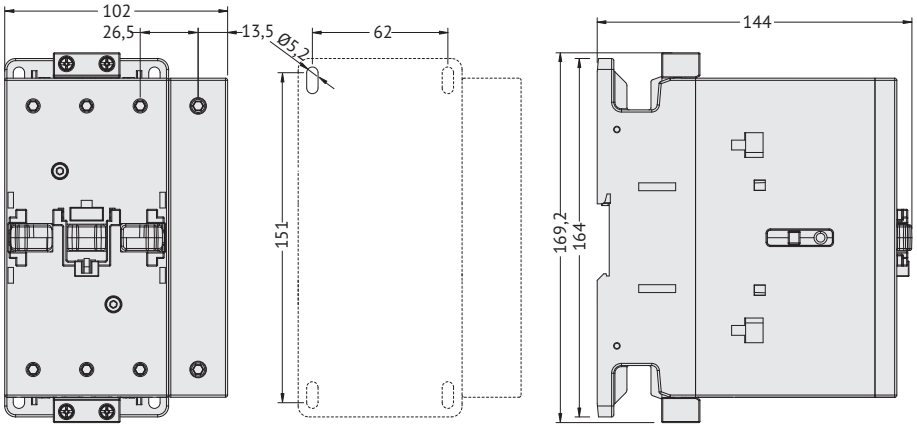

Three-pole contactors AF-160...AF-230 with AC/DC coil

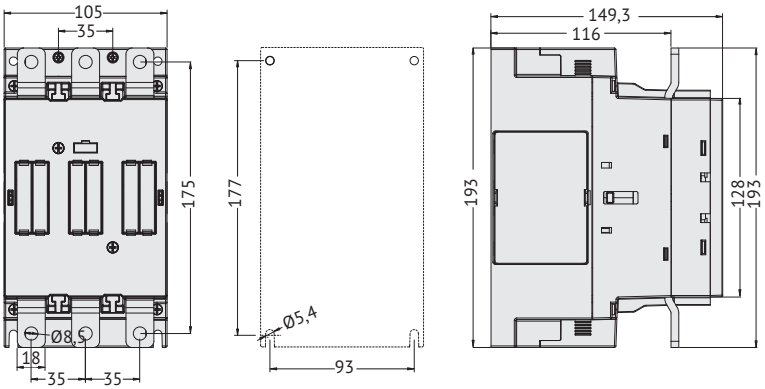

Four-pole contactors AF-160...AF-230 with AC/DC coil

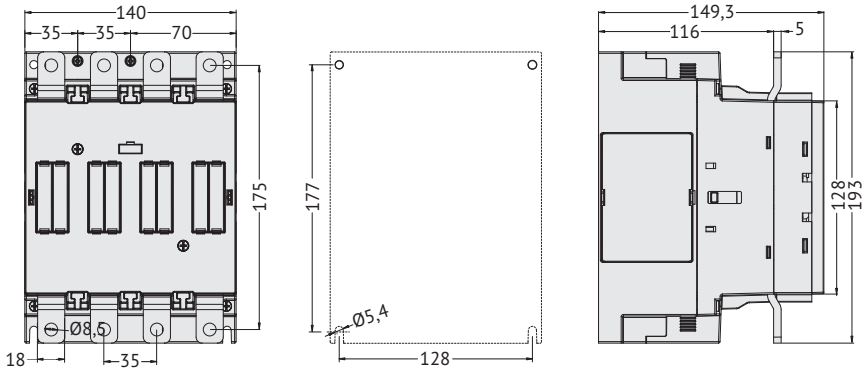

Three-pole contactors AF-265...AF-400 with AC/DC coil

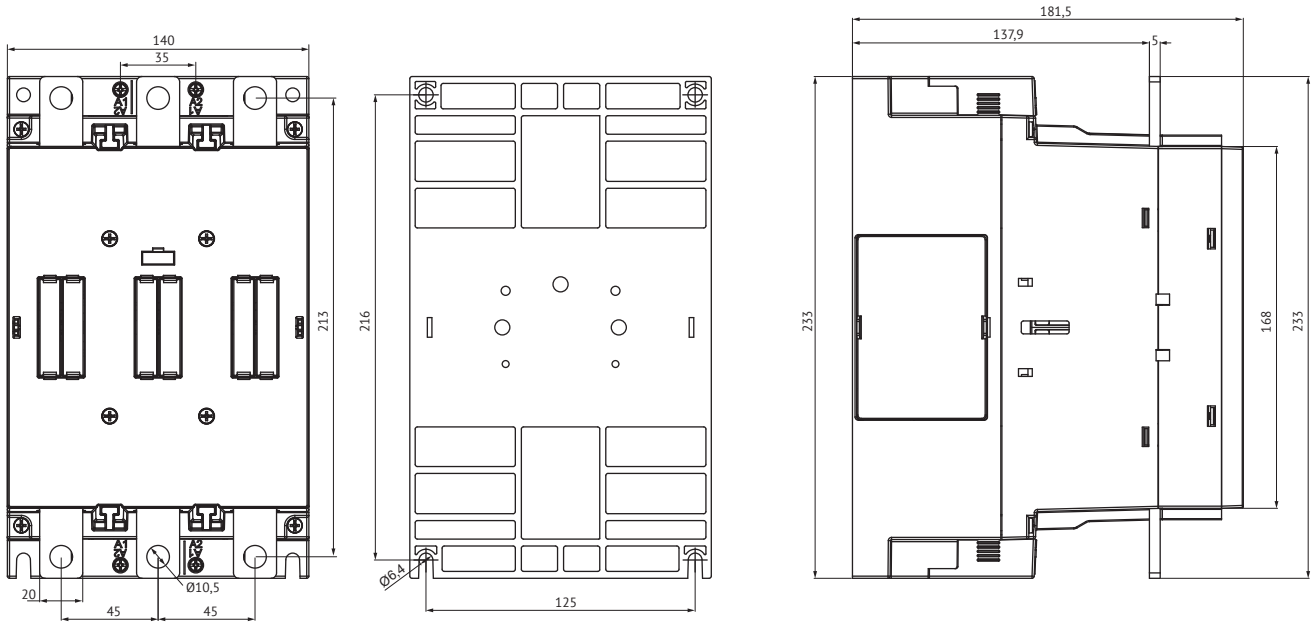

Four-pole contactors AF-265...AF-400 with AC/DC coil

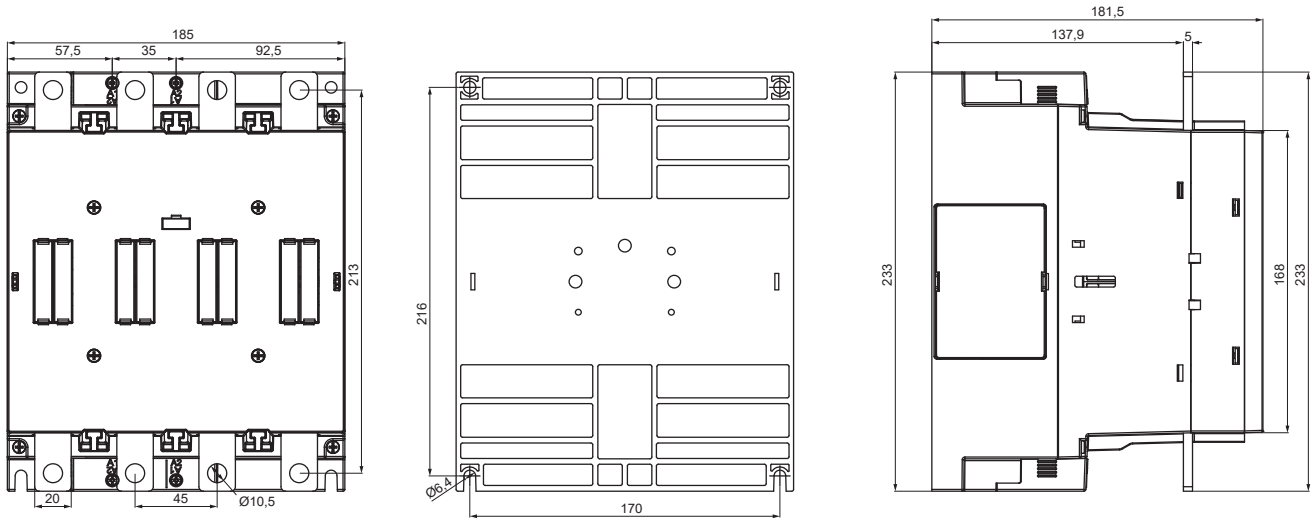

Three-pole contactors F-630 with AC/DC coil

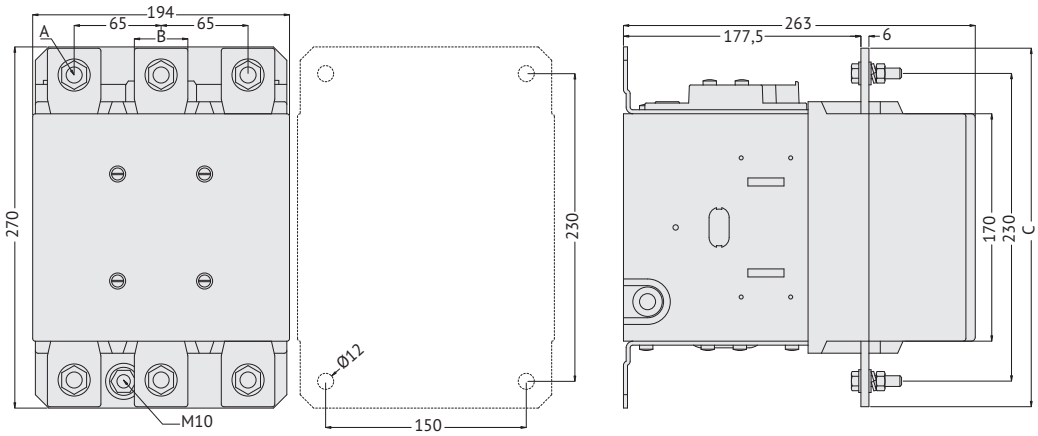

Contactor type	A	B	C
F-500	M10	35	265
F-630	M12	40	270

Four-pole contactors F-630 with AC/DC coil

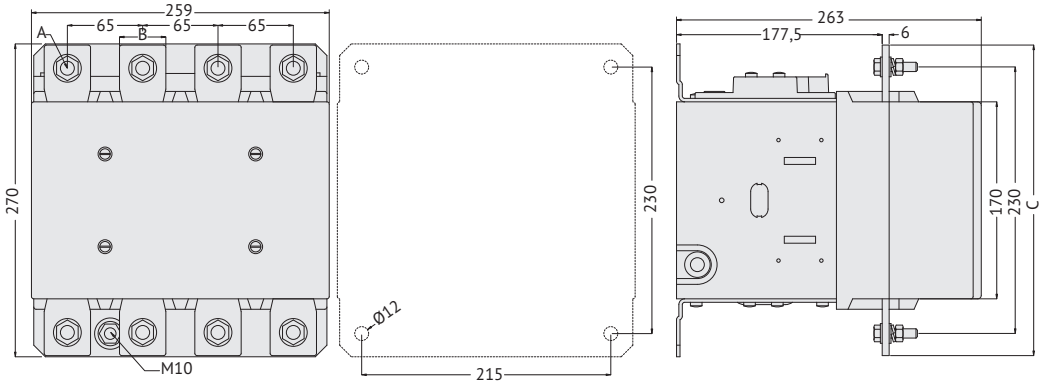

Contactor type	A	B	C
F-500	M10	35	265
F-630	M12	40	270

Three-pole contactors F-1000 with AC/DC coil

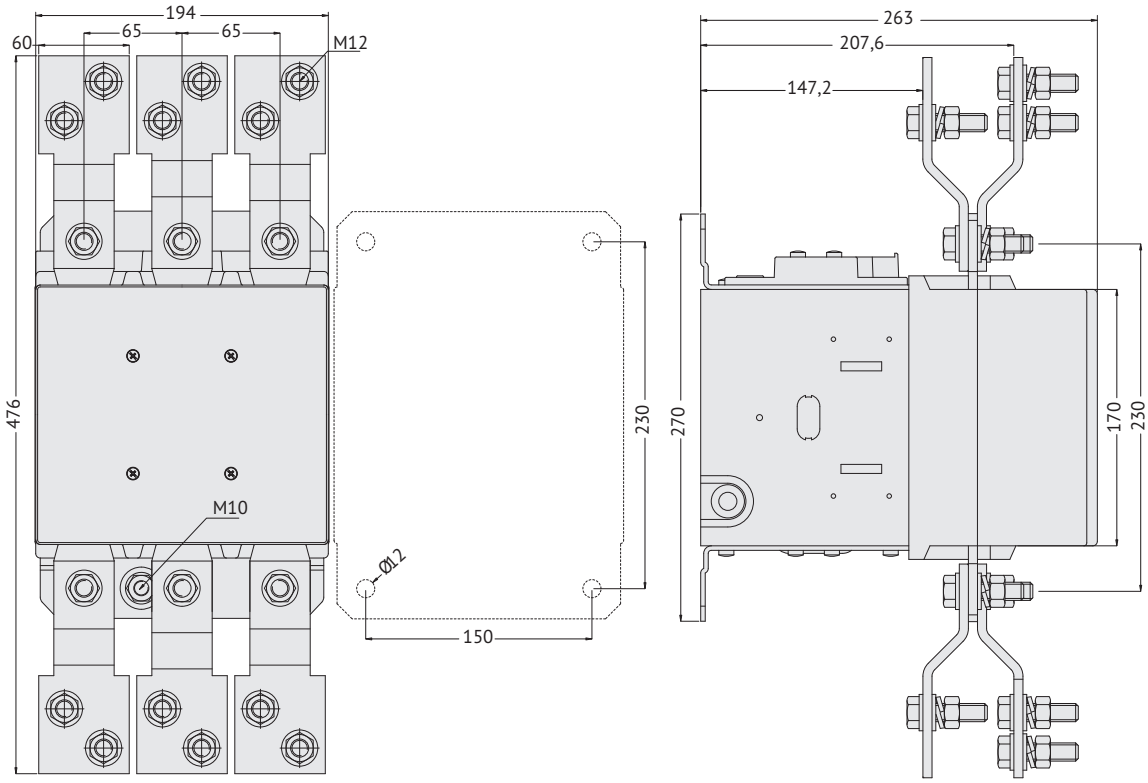

Four-pole contactors F-1000 with AC/DC coil

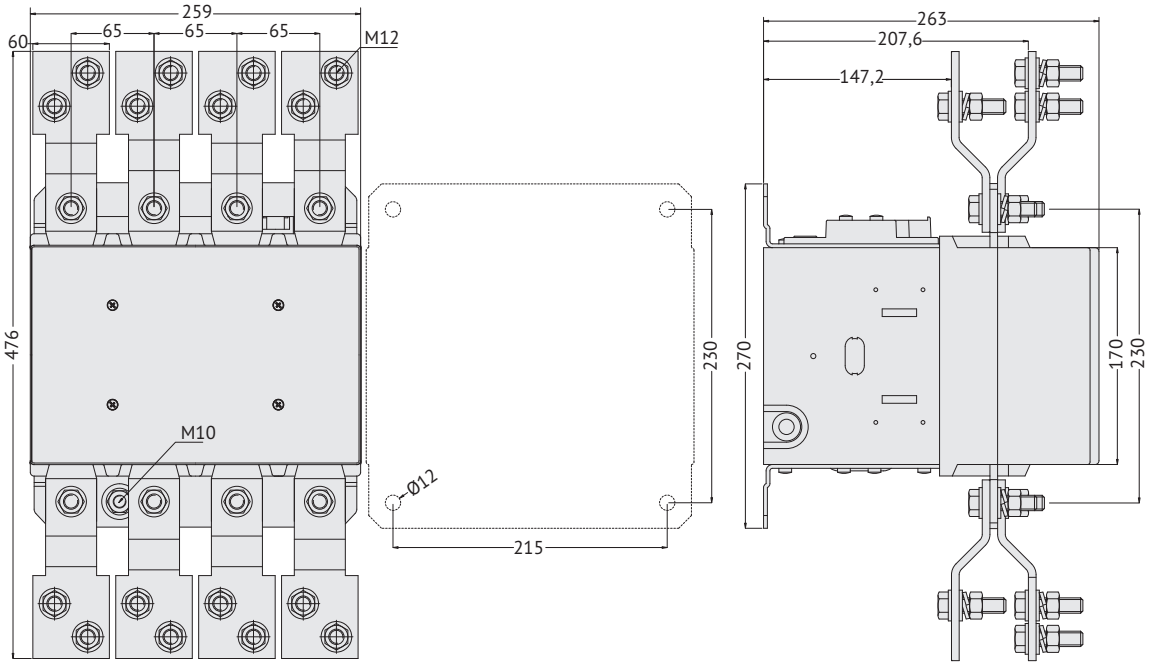

Three-pole contactors F-1250...F-1600 with AC coil

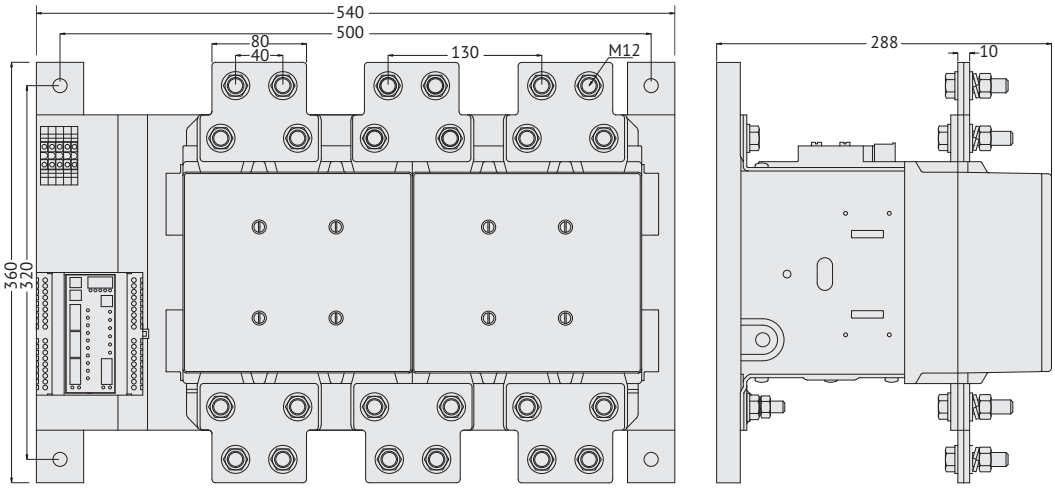

Four-pole contactors F-1250...F-1600 with AC coil

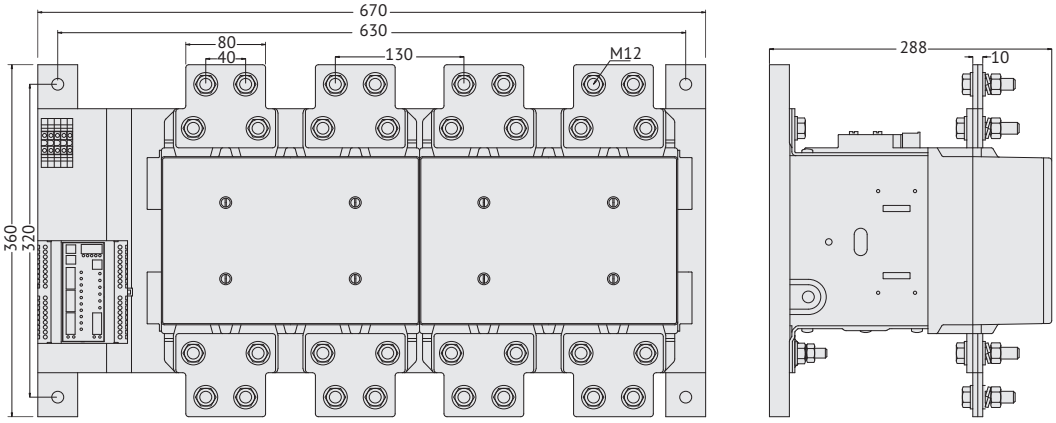

Minimum safe distance between F-250...F-1600 contactor and metal parts

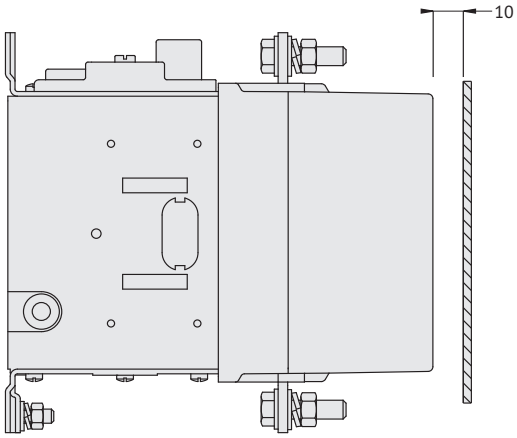

Minimum distance required for coil replacement

	F-250...F400	F-500...F1000
A	145	170
B	110	160

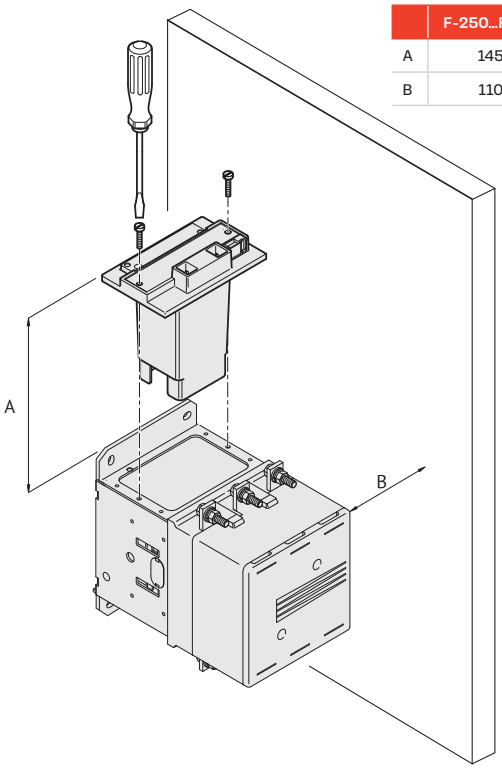

Capacitor switching contactors

Contactors FK-09...FK-18 with AC coil

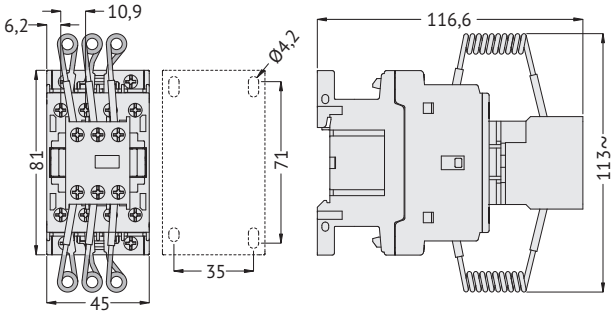

Contactors FK-26...FK-38 with AC coil

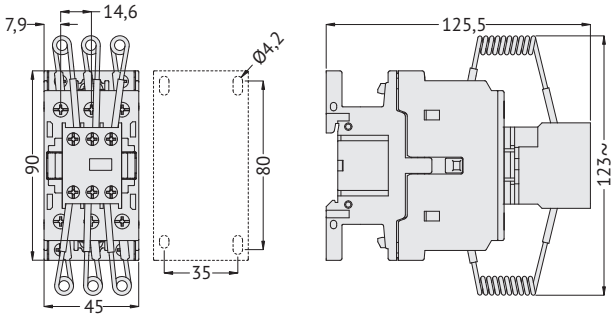

Contactors FK-50...FK-94 with AC coil

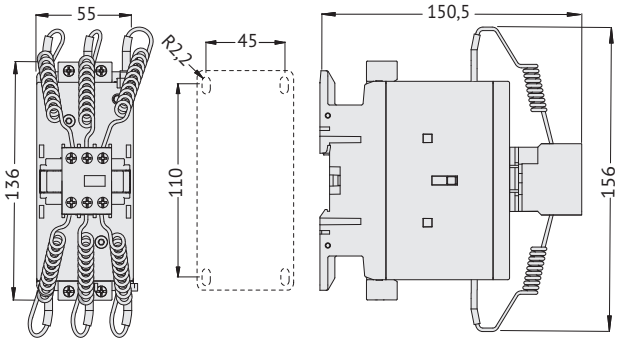

Contactors FK-95...FK-150 with AC coil

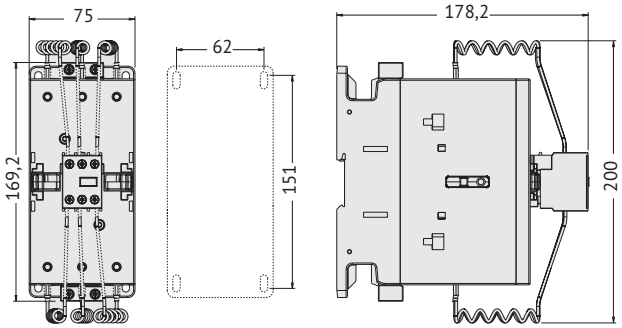

Overall dimensions of accessories (mm)

For contactors F-09...(A)F-150 and contactor relays FR

Auxiliary contacts
FX-10... with 2 contacts

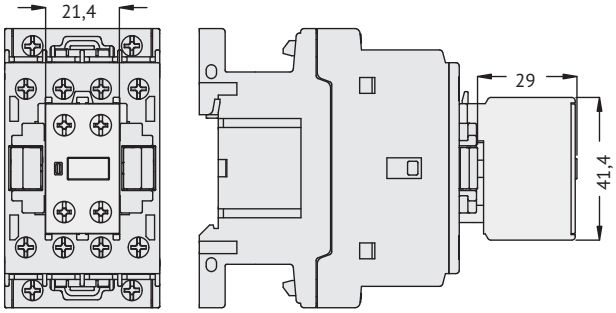

FX-10... with 4 contacts

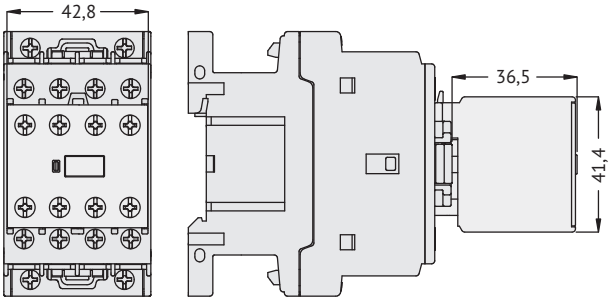

FX-12...

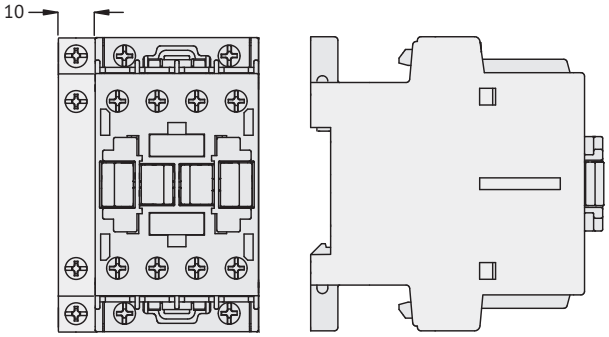

FX-484...

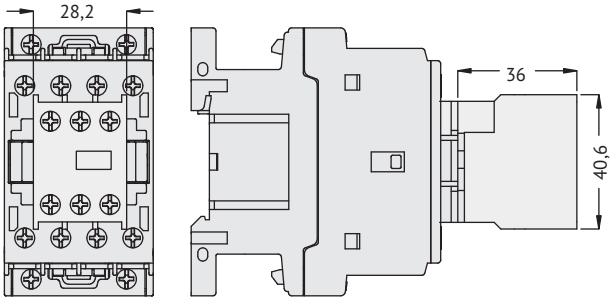

FX-418...

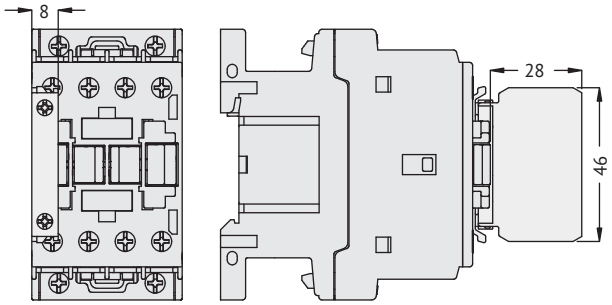

FX-218

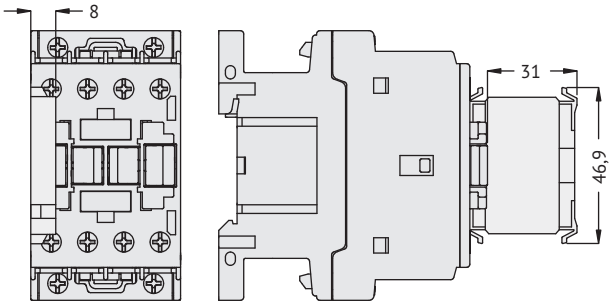

FX-481..., FX-482

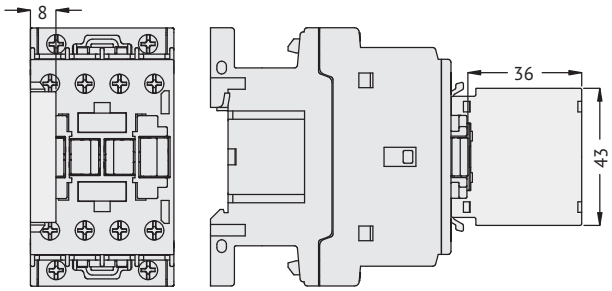

FX-280 c FX-218

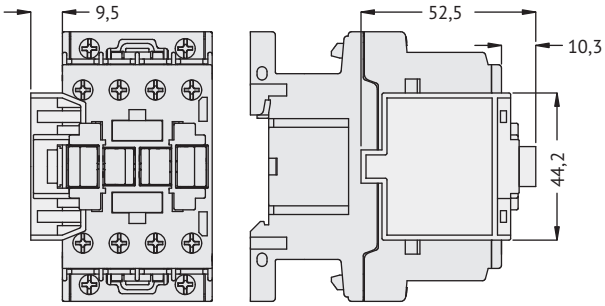

FX-419 with FX-418, FX-428..., FX-483 with FX-481 or FX-482

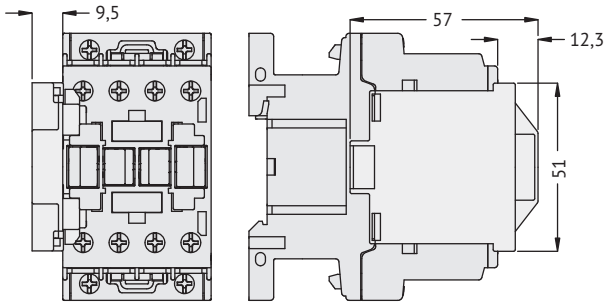

Pneumatic time delay attachments FX-485..., FX-486..., FX-487

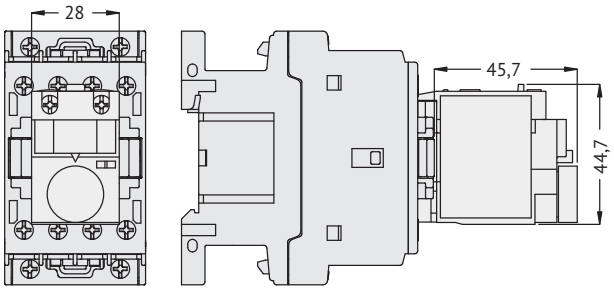

Fourth pole FX-42

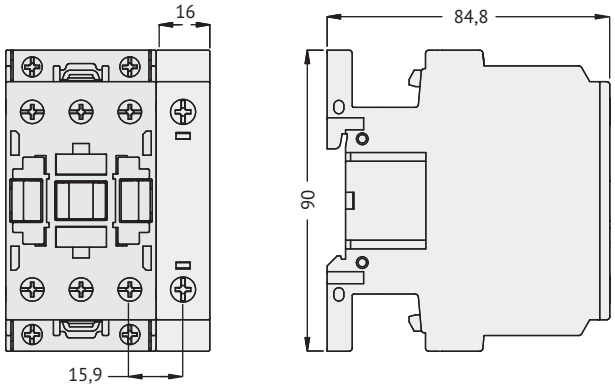

FX-D42

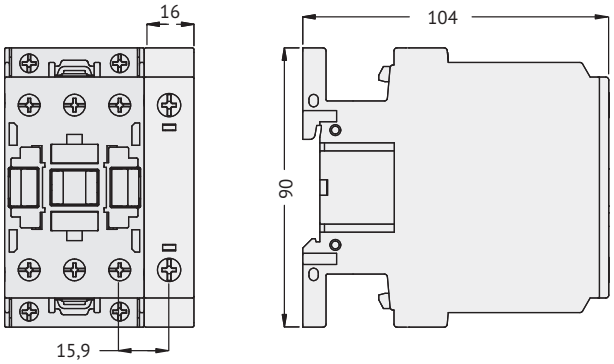

FX-43

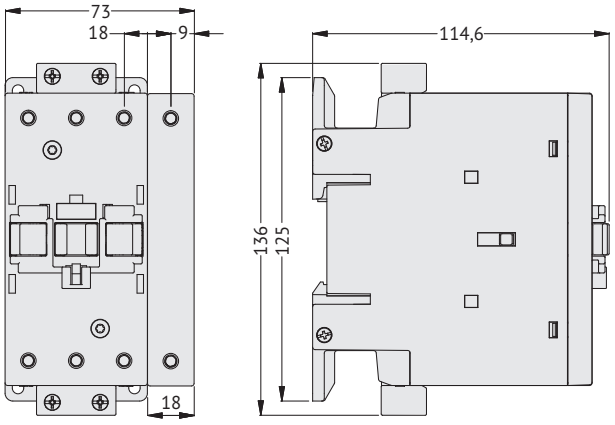

FX-D44

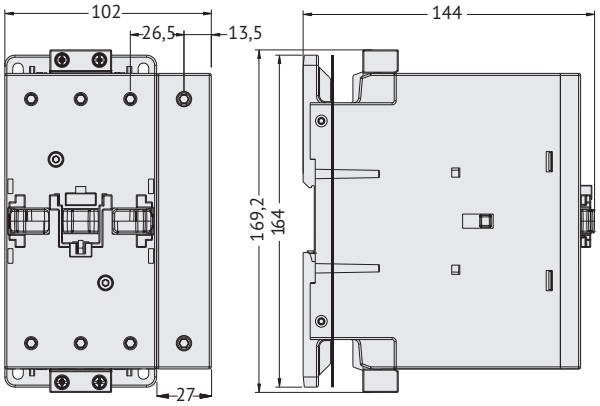

Interlocks FX-5000, FX-5001, FX-5300, FX-5301, FX-5400, FX-5401

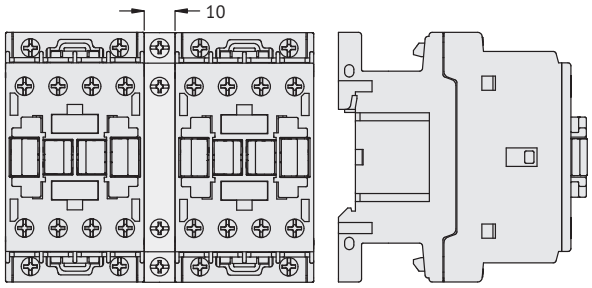

FX-5002

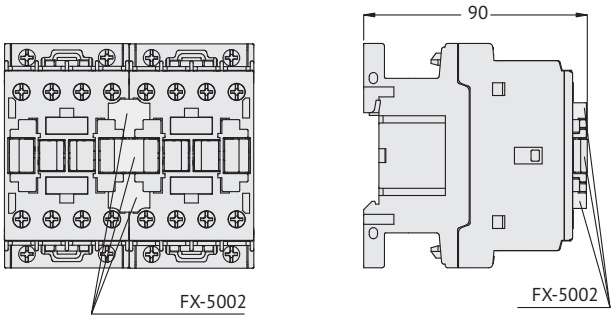

FX-5003, FX-5303, FX-5403

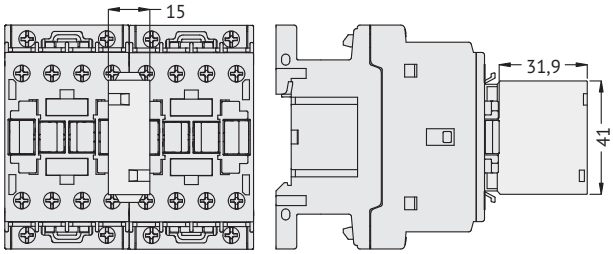

FX-5303, FX-5403

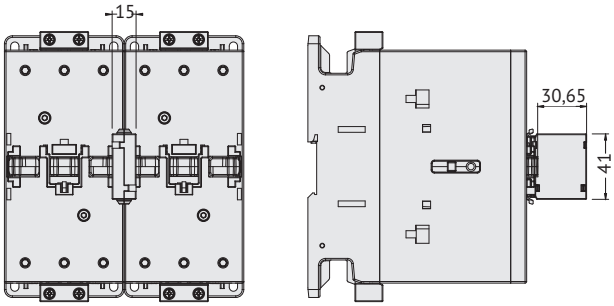

Mechanical lock
FX-222, FX-272, FX-641

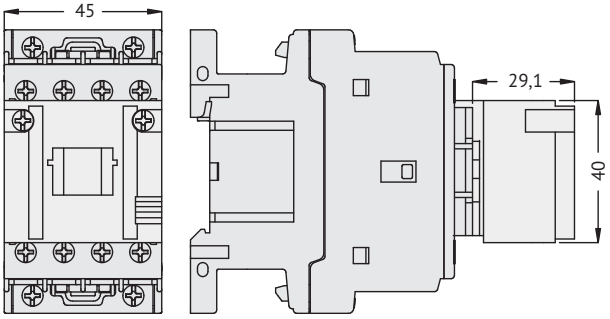

Manual interlocking module
FX-454, FX-455, FX-642

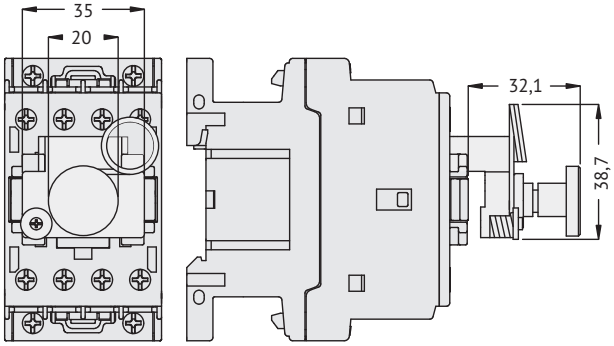

Cover
FX-80

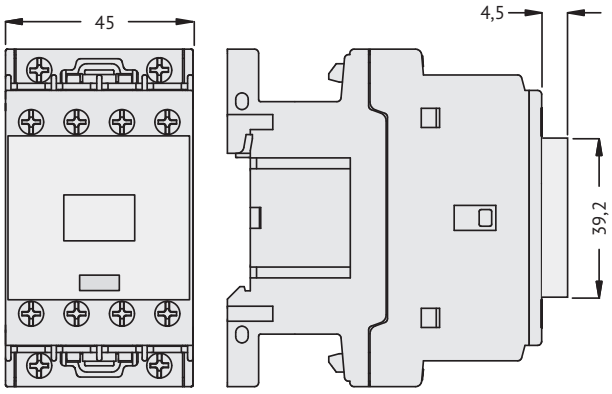

Adapter for increasing FX-231 terminal cross-section

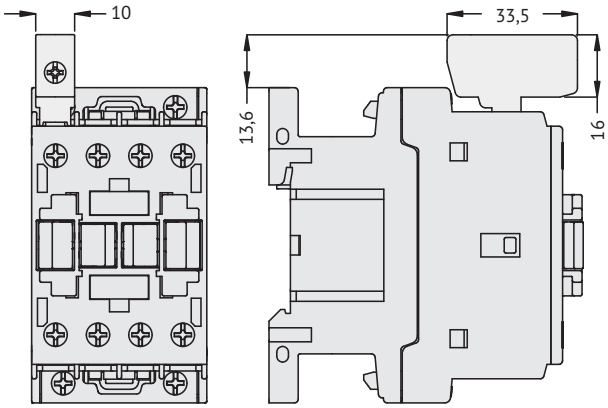

Adapter for increasing FX-232 terminal cross-section

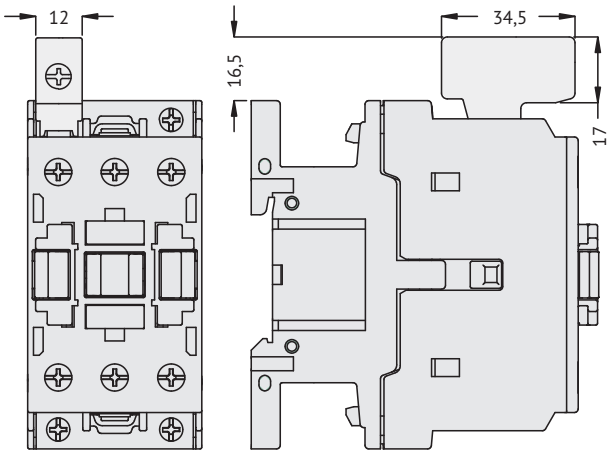

Bracket for screw mounting
FX-8901

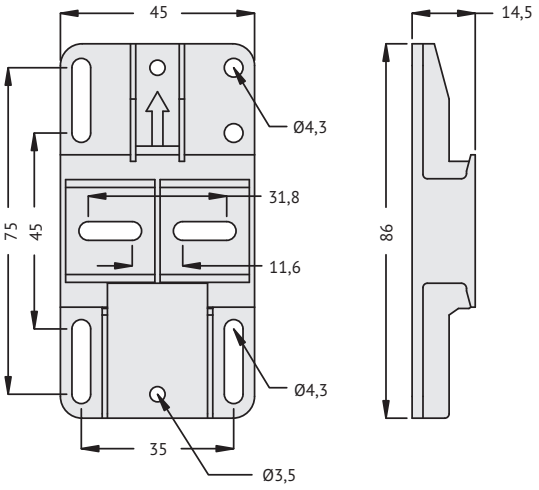

Bracket for screw mounting
FX-8902

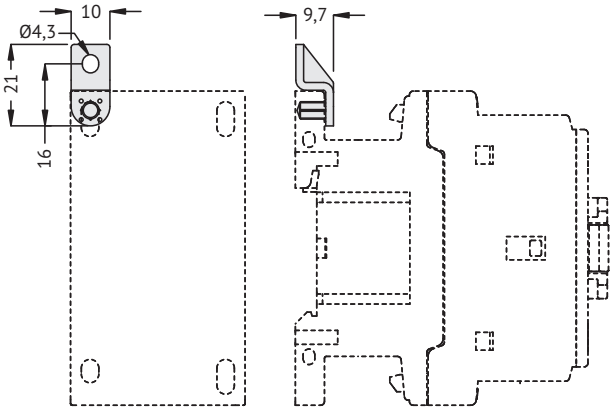

Connection adapter
FX-3101

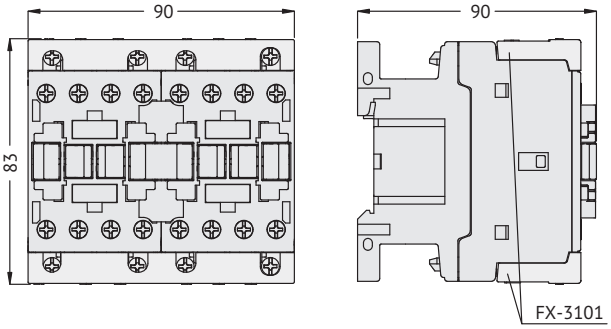

FX-3102

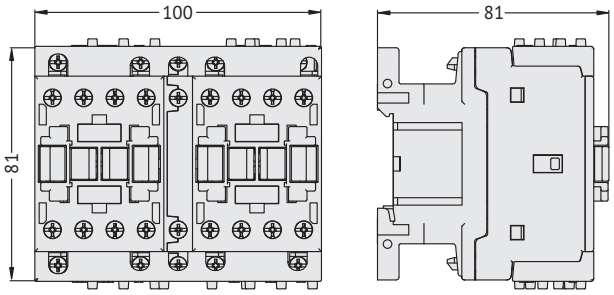

FX-3201

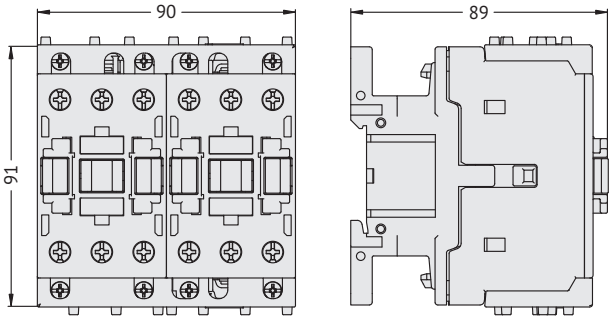

FX-3301

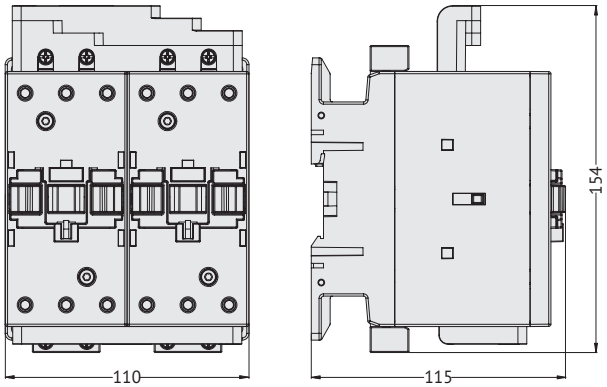

FX-3401

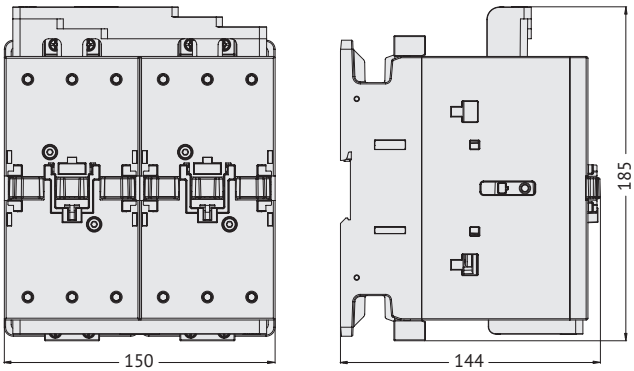

FX-3131

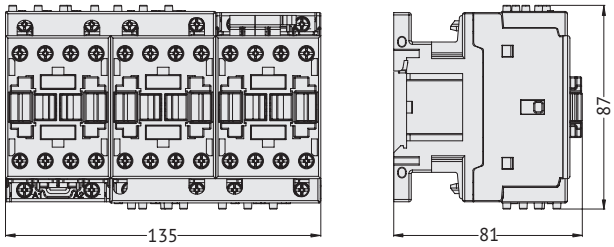

FX-3232

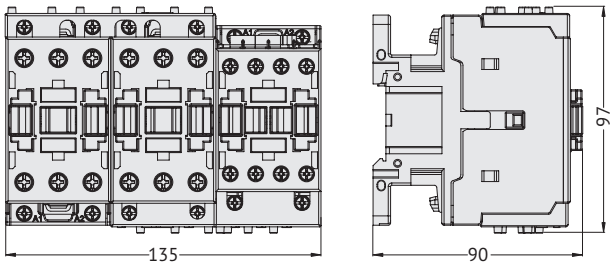

FX-3231

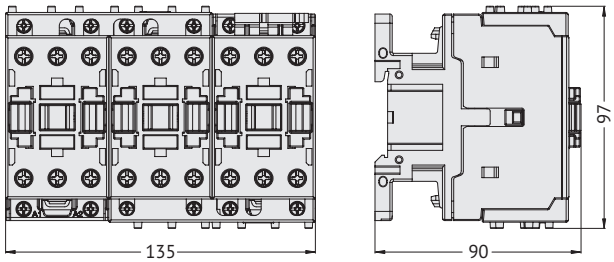

FX-3332

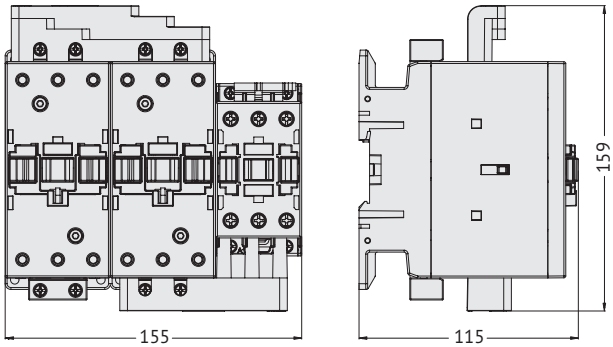

FX-3331

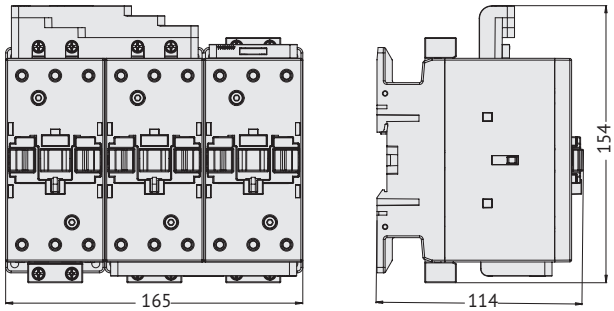

FX-3432

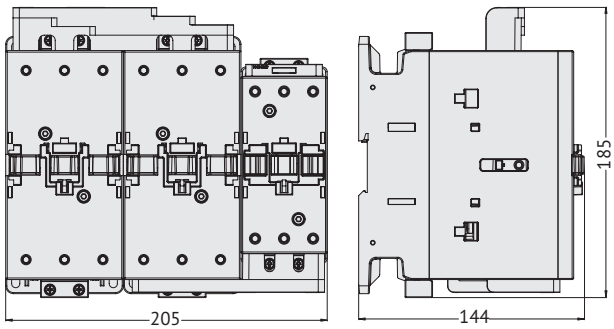

FX-3431

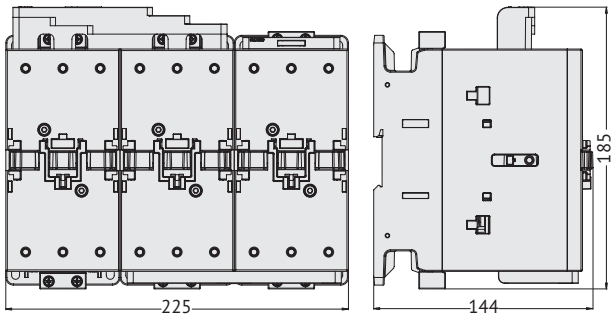

FX-3361

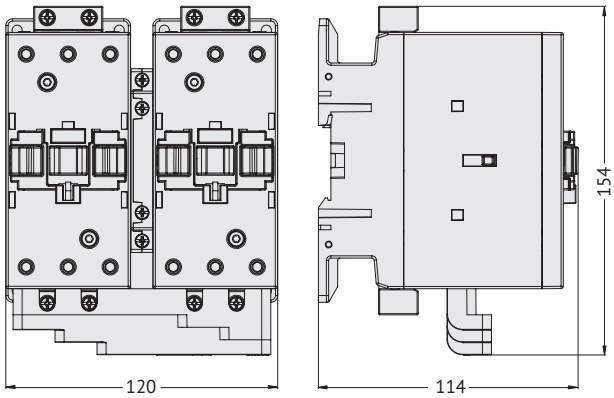

FX-3461

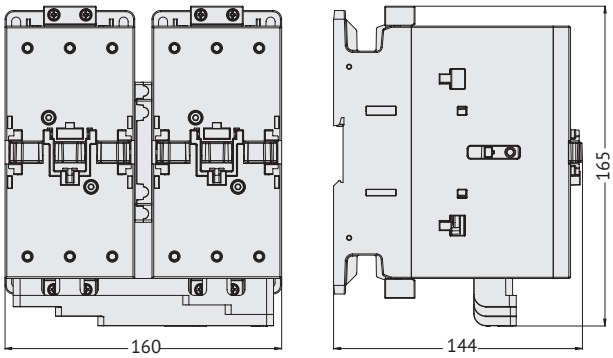

FX-3371

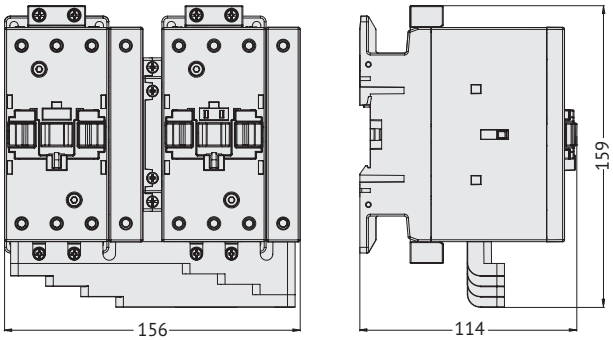

FX-3471

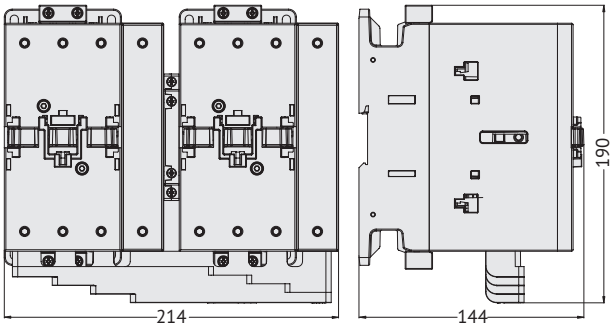

For AF-160...AF-230 contactors

Mechanical interlock
FX-5503, FX-5504

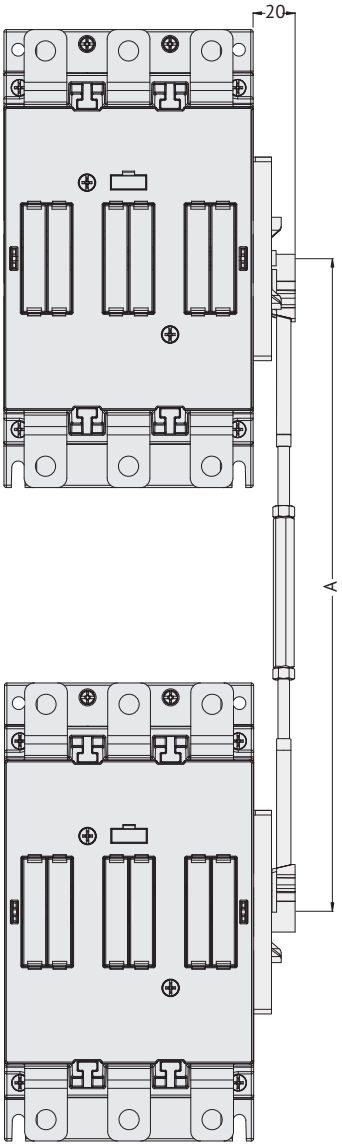

Auxiliary contacts
FX-10C..., FX-12C...

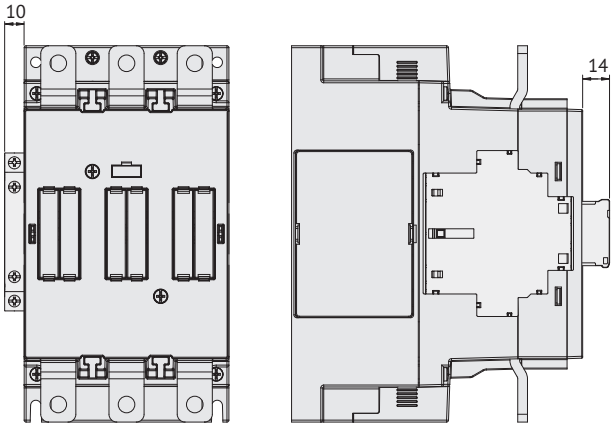

Mechanical interlock
FX-5500

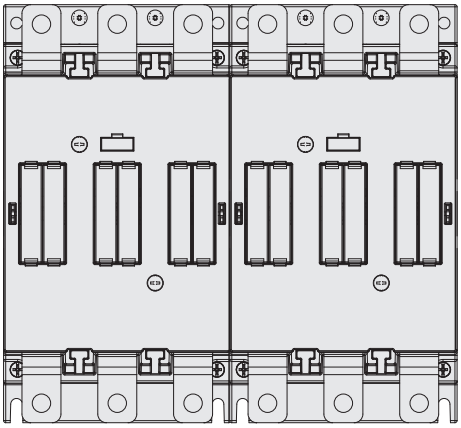

(1) Interlock module FX-5500 is installed between contactors and does not increase the overall dimensions of the assembly

Protective casing
FX-835, FX-845

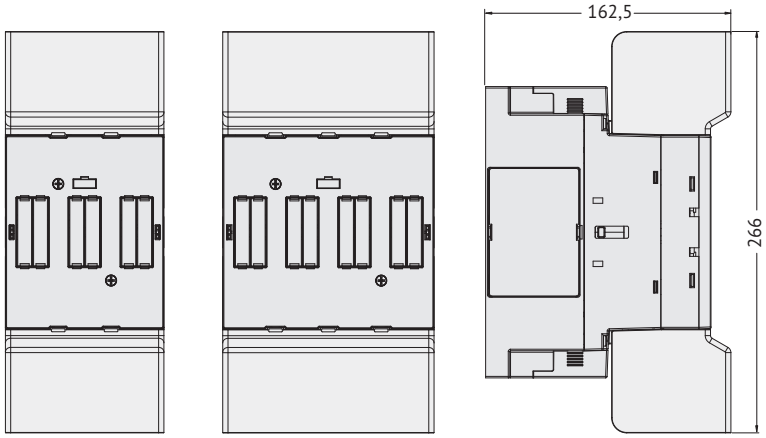

Interphase partition
FX-805

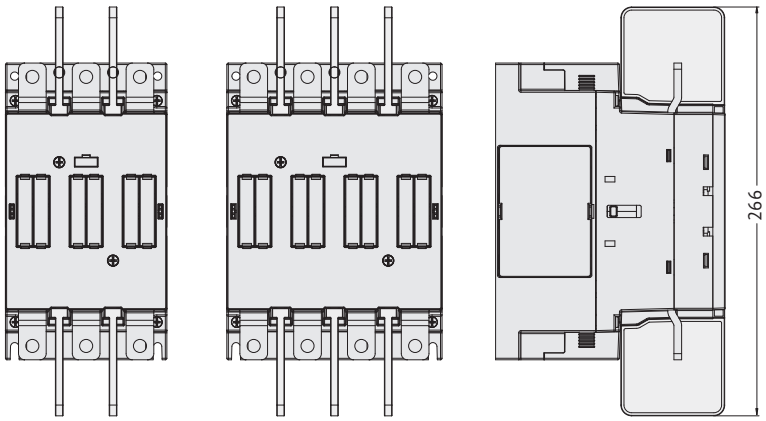

For F-250...F-1000 contactors

Auxiliary contacts
FX-350, FX-354

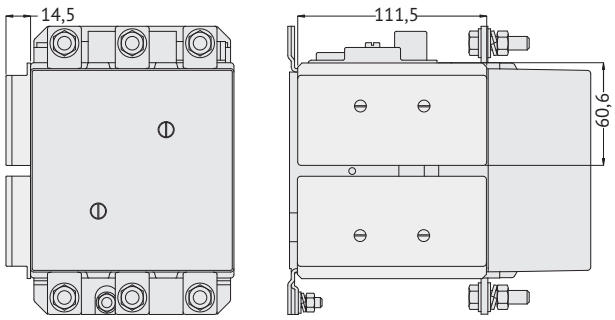

FX-358

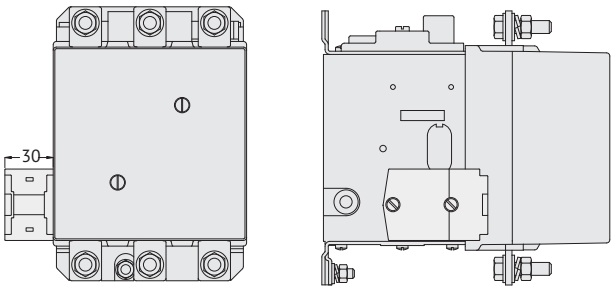

Mechanical interlock
FX-355

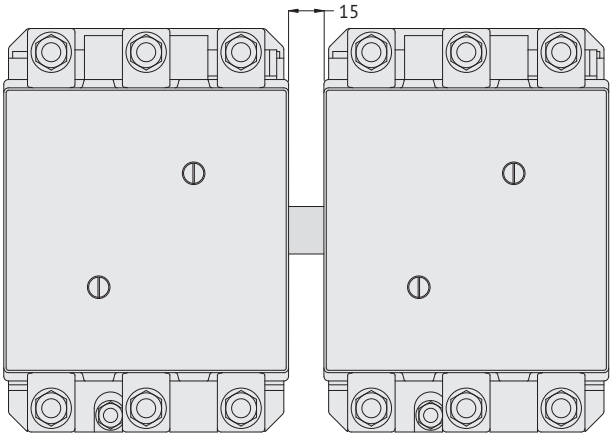

FX-356...

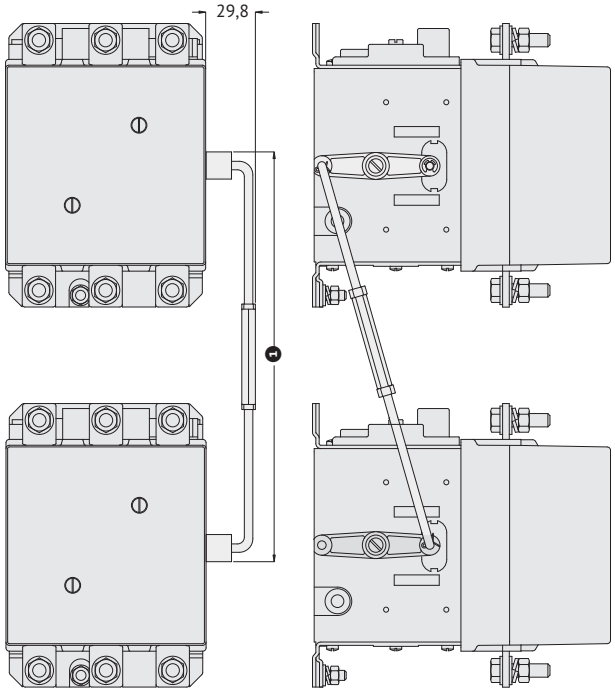

(1) The overall dimensions are presented in the «Technical specifications» section

Protective cover
FX-363

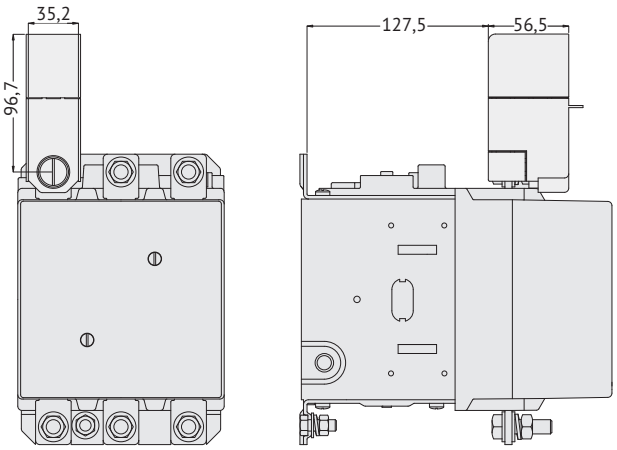

FX-527, FX-529

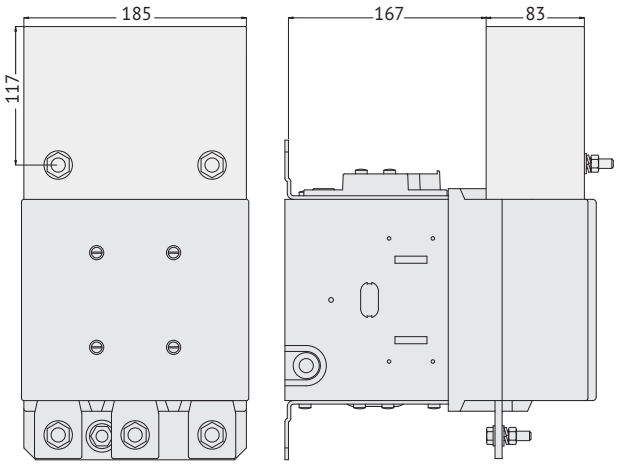

FX-528, FX-530

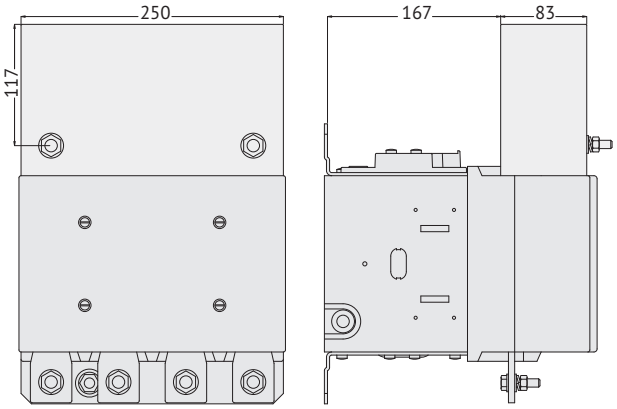

Jumpers for parallel connection of 2 poles
FX-A1720

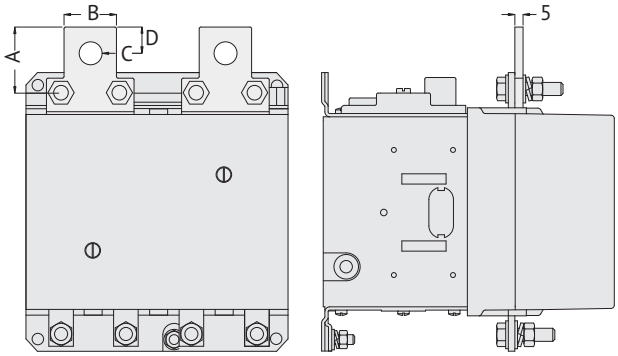

	A	B	C	D
FX-A1720	53	50	Ø18	20

FX-A1845

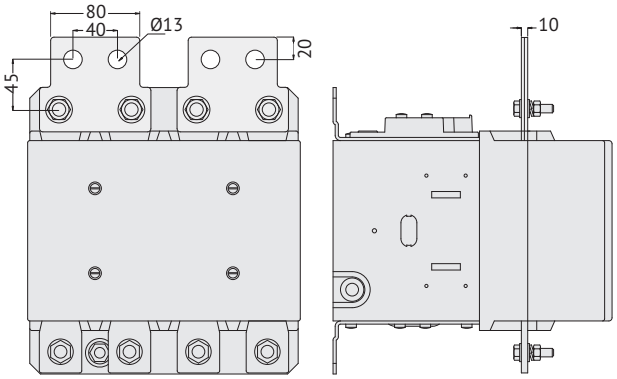

Contactors OptiStart K-FLA and OptiStart K-FLD with mechanical latch installed

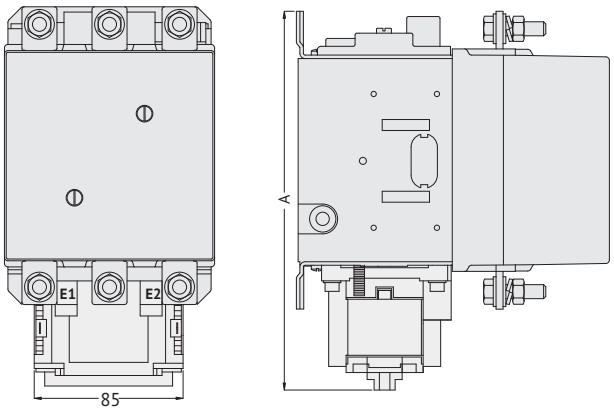

Contactor type	A
F-250, F-400	255
F-500, F-630	300

Electric schematics

Three-pole contactors with AC coil

F-09-30-10...F-25-30-10

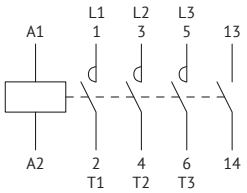

F-09-30-01...F-25-30-01

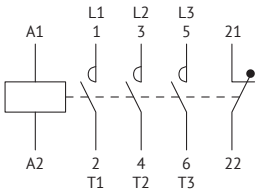

F-26...F-1000

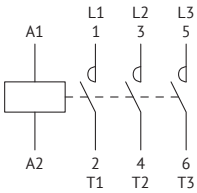

F-1250; F-1600

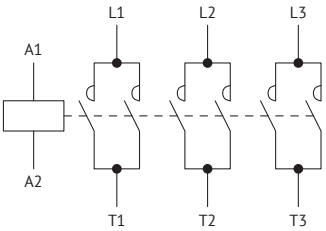

Three-pole contactors with DC or AC/DC coil

F-09-30-10...F-25-30-10

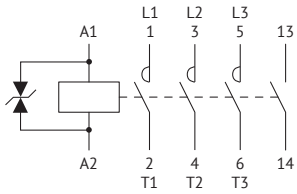

F-09-30-01...F-25-30-01

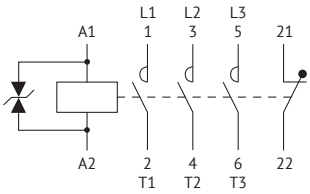

F-26...F-38

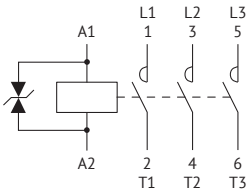

AF-40...AF-400

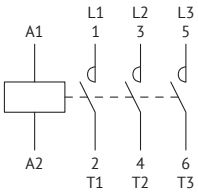

Contactors for capacitor switching

FK-09...FK-150

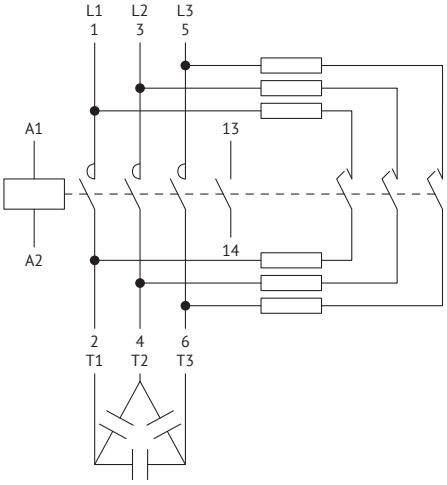

Auxiliary contact 13-14 is installed on FK-09...FK-18 contactors only

Four-pole contactors with AC coil

F-09-40 ... F-1000-40; FD-80-40

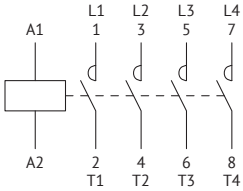

F-1250-40; F-1600-40

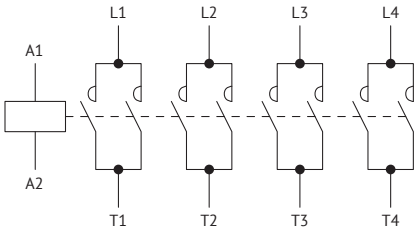

Four-pole contactors with DC or AC/DC coil

F-09-40 ... F-38-40

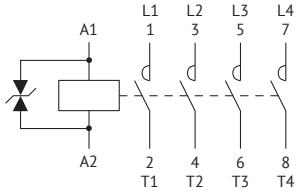

(A)F-65-40...AF-400-40; FD-150-40

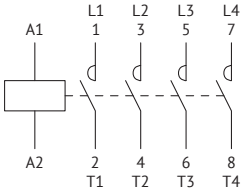

Four-pole contactors with AC coil with 2NO+2NC poles

F-09-22 ... F-80-22

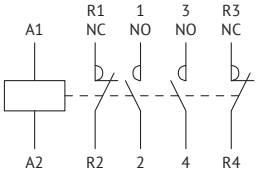

Four-pole contactors with DC with 4NC poles

F-18-04...F-26-04

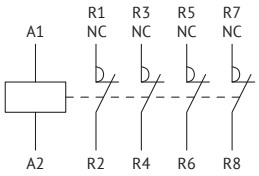

Four-pole contactors with DC or AC/DC coil with 2NO+2NC poles

F-18-22 ... F-38-22

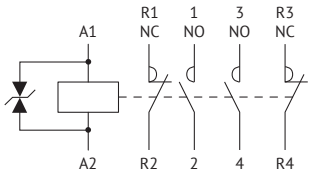

AF-80-22

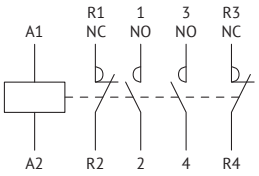

Four-pole contactors with AC with 4NC poles

F-18-04...F-26-04

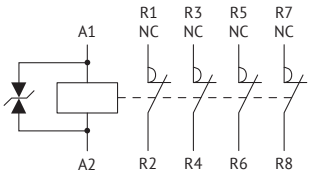

Contactor relays with AC coil

FR-40

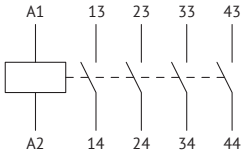

FR-31

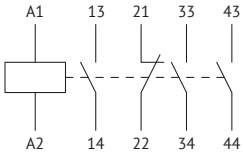

FR-22

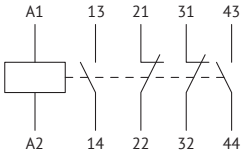

FR-04

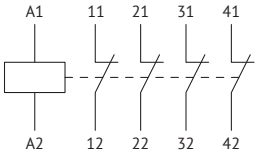

Contactor relays with DC coil

FR-40

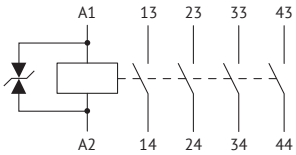

FR-31

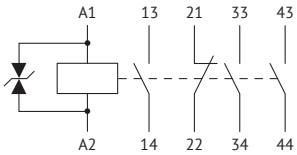

FR-22

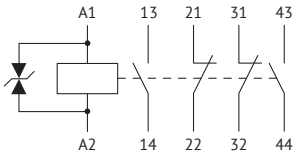

FR-04

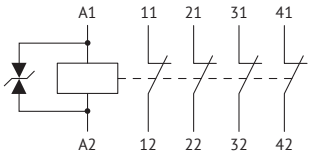

Accessories for contactors F-09...F-150; AF-40...AF-400 and contactor relays FR

Auxiliary contacts

FX-1002

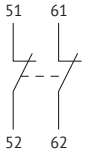

FX-1011

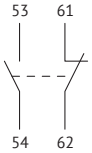

FX-1020

FX-48430

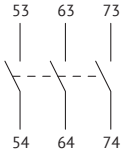

FX-48421

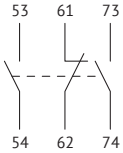

FX-48412

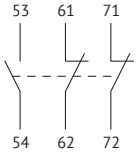

FX-48403

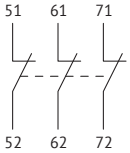

FX-1004

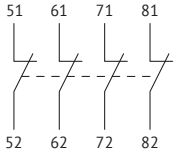

FX-1013

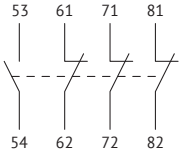

FX-1022

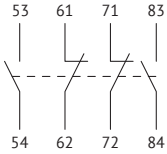

FX-1031

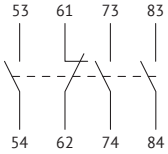

FX-1040

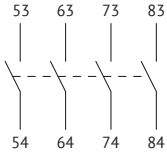

FX-101111

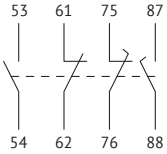

FX-218

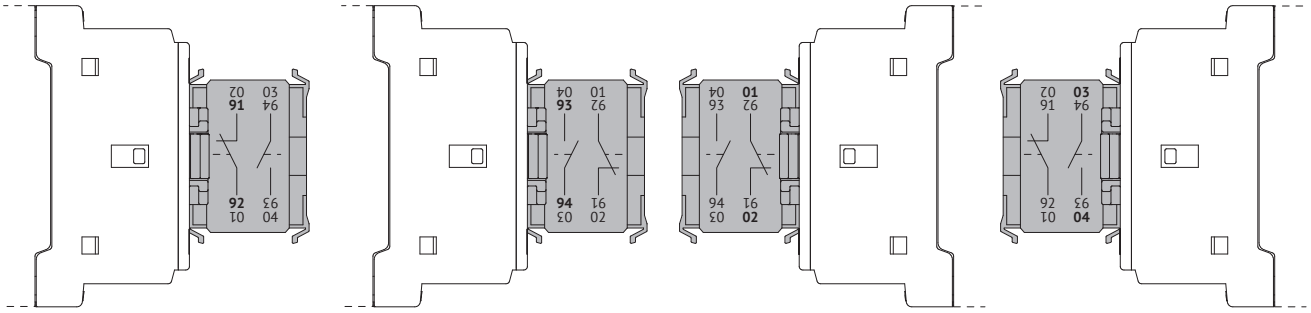

Auxiliary contacts FX-218 have different numbers, which depend on the installation position.
For correct interpretation, use the numbers applied in bold.

FX-1202
FX-12C02

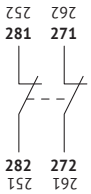

FX-1211
FX-12C11

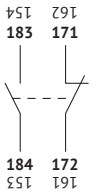

FX-1220
FX-12C20

FX-10C10

FX-10C01

FX-41810
FX-42810

FX-41810A
FX-42810A

FX-41801
FX-42801

FX-41801D
FX-42801D

FX-48120

FX-48111

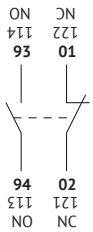

FX-48102

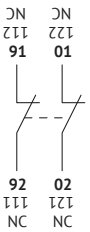

FX-482

Mechanical latch
FX-222...; FX-272...; FX-641...

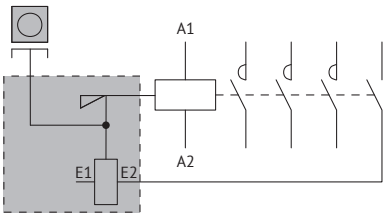

Auxiliary contacts FX-12.../ FX-418.../ FX-481.../ FX-482 have different numbers, which depend on the installation position.
For correct interpretation in case of the contact unit installation on the left side, use the numbers applied in bold.

Fourth pole
FX-42; FX-43;
FX-44; FX-D42

Electromechanical interlock
FX-5001; FX-5301; FX-5401

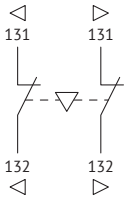

Pneumatic time delay attachments

FX-485...

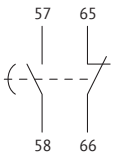

FX-486...; FX-487

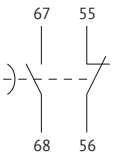

Connection adapters
FX-3101; FX-3102; FX-3201; FX-3301; FX-3401

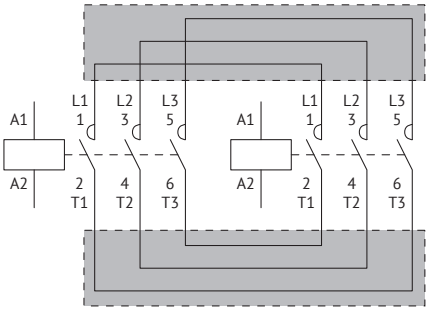

FX-3131; FX-3231; FX-3232; FX-3331; FX-3332; FX-3431; FX-3432

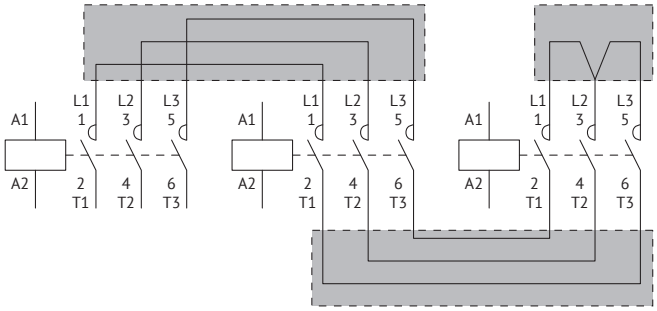

FX-3361; FX-3461

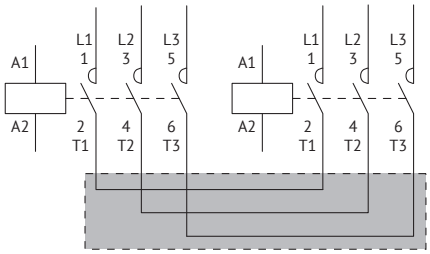

FX-3371; FX-3471

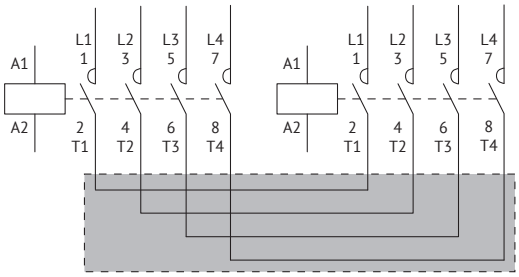

Accessories for F-500...F-1000 contactors

Auxiliary contacts
FX-350; FX-354

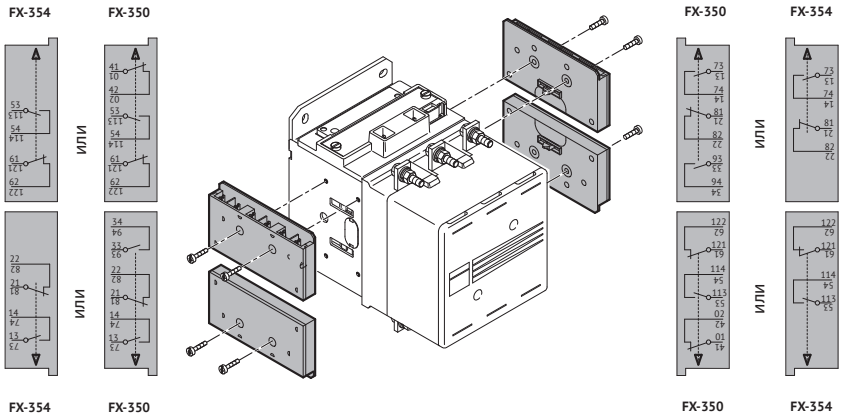

OptiStart K-M

↗ Mini-contactors

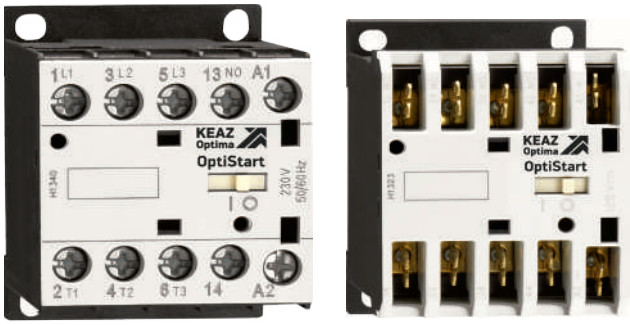

Designation

Series OptiStart K-M mini-contactors

OptiStart K - M - 09 - 30 - 01 - A 400 - F

(1) (2) (3) (4) (5) (6) (7) (8) (9)

1	Group	OptiStart — Motor control and protection equipment		
2	Series	K — Contactors		
3	Version	**M** — Mini-contactors		
4	Rated current (AC-3), A	The rated current is specified for utilization category AC-3 at a rated voltage of 400 V		
5	Number of power poles	The first digit stands for the number of NO power contacts. The second digit stands for the number of NC power contacts.		
6	Number of built-in auxiliary contacts	The first digit stands for the number of NO auxiliary contacts. The second digit stands for the number of NC auxiliary contacts.		
7	Control coil type and current type	A — AC control coil	D — DC control coil	Z — DC control coil with reduced power consumption and ability of direct connection to the PLC
8	Control coil voltage	Rated supply voltage is specified. Information on the operating voltage range and permissible deviations is provided in the «Technical Specifications» section.		
9	Connection method	No symbol — Terminal screws	F — Faston terminals	P — Solder pins

Series MR mini-contactor relays

OptiStart K - MR - 22 - D 220 - F

(1) (2) (3) (4) (5) (6) (7)

1	Group	OptiStart — Motor control and protection equipment		
2	Series	K — Contactors		
3	Version	MR — contactor relay		
4	Quantity and type of contacts	The first digit stands for the number of NO contacts. The second digit stands for the number of NC contacts.		
5	Control coil type and current type	A — AC control coil	D — DC control coil	Z — DC control coil with reduced power consumption and ability of direct connection to the PLC
6	Control coil voltage	Rated supply voltage is specified. Information on the operating voltage range and permissible deviations is provided in the «Technical specifications» section.		
7	Connection method	No symbol — Terminal screws	F — Faston terminals	P — Solder pins

Items

Series M mini-contactors

Three-pole series M mini-contactors with AC control coil with screw terminals

Appearance	Rated current (AC-3, 400 V, ≤55 °C), A	Rated power (AC-3, 400 V, ≤55 °C), kW	Auxiliary contacts		Control coil rated voltage, V AC	Product name	Code
			NO	NC			
	06	2,4	0	1	24	OptiStart K-M-06-30-01-A024	335518
	06	2,4	0	1	48	OptiStart K-M-06-30-01-A048	335519
	06	2,4	0	1	110	OptiStart K-M-06-30-01-A110	335520
	06	2,4	0	1	230	OptiStart K-M-06-30-01-A230	335521
	06	2,4	0	1	400	OptiStart K-M-06-30-01-A400	335522
	06	2,4	1	0	24	OptiStart K-M-06-30-10-A024	335530
	06	2,4	1	0	48	OptiStart K-M-06-30-10-A048	335531
	06	2,4	1	0	110	OptiStart K-M-06-30-10-A110	335532
	06	2,4	1	0	230	OptiStart K-M-06-30-10-A230	335533
	06	2,4	1	0	400	OptiStart K-M-06-30-10-A400	335534
	09	4,3	0	1	24	OptiStart K-M-09-30-01-A024	335542
	09	4,3	0	1	48	OptiStart K-M-09-30-01-A048	335543
	09	4,3	0	1	110	OptiStart K-M-09-30-01-A110	335544
	09	4,3	0	1	230	OptiStart K-M-09-30-01-A230	335545
	09	4,3	0	1	400	OptiStart K-M-09-30-01-A400	335546
	09	4,3	1	0	24	OptiStart K-M-09-30-10-A024	335556
	09	4,3	1	0	48	OptiStart K-M-09-30-10-A048	335557
	09	4,3	1	0	110	OptiStart K-M-09-30-10-A110	335558
	09	4,3	1	0	230	OptiStart K-M-09-30-10-A230	335559
	09	4,3	1	0	400	OptiStart K-M-09-30-10-A400	335560
	12	6,2	0	1	24	OptiStart K-M-12-30-01-A024	335594
	12	6,2	0	1	48	OptiStart K-M-12-30-01-A048	335595
	12	6,2	0	1	110	OptiStart K-M-12-30-01-A110	335596
	12	6,2	0	1	230	OptiStart K-M-12-30-01-A230	335597
	12	6,2	0	1	400	OptiStart K-M-12-30-01-A400	335598
	12	6,2	1	0	24	OptiStart K-M-12-30-10-A024	335606
	12	6,2	1	0	48	OptiStart K-M-12-30-10-A048	335607
	12	6,2	1	0	110	OptiStart K-M-12-30-10-A110	335608
	12	6,2	1	0	230	OptiStart K-M-12-30-10-A230	335609
	12	6,2	1	0	400	OptiStart K-M-12-30-10-A400	335610

Three-pole series M mini-contactors with DC control coil with screw terminals

Appearance	Rated current (AC-3, 400 V, ≤55 °C), A	Rated power (AC-3, 400 V, ≤55 °C), kW	Auxiliary contacts		Control coil rated voltage, V DC	Product name	Code
			NO	NC			
	06	2,4	0	1	12	OptiStart K-M-06-30-01-D012	335523
	06	2,4	0	1	24	OptiStart K-M-06-30-01-D024	335524
	06	2,4	0	1	48	OptiStart K-M-06-30-01-D048	335525
	06	2,4	0	1	60	OptiStart K-M-06-30-01-D060	335526
	06	2,4	0	1	110	OptiStart K-M-06-30-01-D110	335527
	06	2,4	0	1	125	OptiStart K-M-06-30-01-D125	335528
	06	2,4	0	1	220	OptiStart K-M-06-30-01-D220	335529
	06	2,4	1	0	12	OptiStart K-M-06-30-10-D012	335535
	06	2,4	1	0	24	OptiStart K-M-06-30-10-D024	335536
	06	2,4	1	0	48	OptiStart K-M-06-30-10-D048	335537
	06	2,4	1	0	60	OptiStart K-M-06-30-10-D060	335538
	06	2,4	1	0	110	OptiStart K-M-06-30-10-D110	335539
	06	2,4	1	0	125	OptiStart K-M-06-30-10-D125	335540
	06	2,4	1	0	220	OptiStart K-M-06-30-10-D220	335541
	09	4,3	0	1	12	OptiStart K-M-09-30-01-D012	335547
	09	4,3	0	1	24	OptiStart K-M-09-30-01-D024	335548
	09	4,3	0	1	48	OptiStart K-M-09-30-01-D048	335549
	09	4,3	0	1	60	OptiStart K-M-09-30-01-D060	335550
	09	4,3	0	1	110	OptiStart K-M-09-30-01-D110	335551
	09	4,3	0	1	125	OptiStart K-M-09-30-01-D125	335552
	09	4,3	0	1	220	OptiStart K-M-09-30-01-D220	335553
	09	4,3	1	0	12	OptiStart K-M-09-30-10-D012	335561
	09	4,3	1	0	24	OptiStart K-M-09-30-10-D024	335562
	09	4,3	1	0	48	OptiStart K-M-09-30-10-D048	335563
	09	4,3	1	0	60	OptiStart K-M-09-30-10-D060	335564
	09	4,3	1	0	110	OptiStart K-M-09-30-10-D110	335565
	09	4,3	1	0	125	OptiStart K-M-09-30-10-D125	335566
	09	4,3	1	0	220	OptiStart K-M-09-30-10-D220	335567
	12	6,2	0	1	12	OptiStart K-M-12-30-01-D012	335599
	12	6,2	0	1	24	OptiStart K-M-12-30-01-D024	335600
	12	6,2	0	1	48	OptiStart K-M-12-30-01-D048	335601
	12	6,2	0	1	60	OptiStart K-M-12-30-01-D060	335602
	12	6,2	0	1	110	OptiStart K-M-12-30-01-D110	335603
	12	6,2	0	1	125	OptiStart K-M-12-30-01-D125	335604
	12	6,2	0	1	220	OptiStart K-M-12-30-01-D220	335605
	12	6,2	1	0	12	OptiStart K-M-12-30-10-D012	335611
	12	6,2	1	0	24	OptiStart K-M-12-30-10-D024	335612
	12	6,2	1	0	48	OptiStart K-M-12-30-10-D048	335613
	12	6,2	1	0	60	OptiStart K-M-12-30-10-D060	335614
	12	6,2	1	0	110	OptiStart K-M-12-30-10-D110	335615
	12	6,2	1	0	125	OptiStart K-M-12-30-10-D125	335616
	12	6,2	1	0	220	OptiStart K-M-12-30-10-D220	335617

Three-pole series M mini-contactors with DC control coil with reduced power consumption (-Z) with screw terminals

Appearance	Rated current (AC-3, 400 V, ≤55 °C), A	Rated power (AC-3, 400 V, ≤55 °C), kW	Auxiliary contacts		Control coil rated voltage, V DC	Product name	Code
			NO	NC			
	09	4,3	0	1	24	OptiStart K-M-09-30-01-Z024	335554
	09	4,3	0	1	48	OptiStart K-M-09-30-01-Z048	335555
	09	4,3	1	0	24	OptiStart K-M-09-30-10-Z024	335568
	09	4,3	1	0	48	OptiStart K-M-09-30-10-Z048	335569

Note: The list of possible accessories is limited. For more detailed information, see the «Maximum combination of auxiliary accessories» section.

Four-pole series M mini-contactors with AC control coil with screw terminals

Appearance	Rated current (AC-3, 400 V, ≤55 °C), A	Rated current (AC-1, 400 V, ≤40 °C), A	Main contacts		Control coil rated voltage, V AC	Product name	Code
			NO	NC			
	09	4,3	2	2	24	OptiStart K-M-09-22-00-A024	335570
	09	4,3	2	2	48	OptiStart K-M-09-22-00-A048	335571
	09	4,3	2	2	110	OptiStart K-M-09-22-00-A110	335572
	09	4,3	2	2	230	OptiStart K-M-09-22-00-A230	335573
	09	4,3	2	2	400	OptiStart K-M-09-22-00-A400	335574
	09	4,3	4	0	24	OptiStart K-M-09-40-00-A024	335582
	09	4,3	4	0	48	OptiStart K-M-09-40-00-A048	335583
	09	4,3	4	0	110	OptiStart K-M-09-40-00-A110	335584
	09	4,3	4	0	230	OptiStart K-M-09-40-00-A230	335585
	09	4,3	4	0	400	OptiStart K-M-09-40-00-A400	335586

Four-pole series M mini-contactors with DC control coil with screw terminals

Appearance	Rated current (AC-3, 400 V, ≤55 °C), A	Rated current (AC-1, 400 V, ≤40 °C), A	Main contacts		Control coil rated voltage, V DC	Product name	Code
			NO	NC			
	09	4,3	2	2	12	OptiStart K-M-09-22-00-D012	335575
	09	4,3	2	2	24	OptiStart K-M-09-22-00-D024	335576
	09	4,3	2	2	48	OptiStart K-M-09-22-00-D048	335577
	09	4,3	2	2	60	OptiStart K-M-09-22-00-D060	335578
	09	4,3	2	2	110	OptiStart K-M-09-22-00-D110	335579
	09	4,3	2	2	125	OptiStart K-M-09-22-00-D125	335580
	09	4,3	2	2	220	OptiStart K-M-09-22-00-D220	335581
	09	4,3	4	0	12	OptiStart K-M-09-40-00-D012	335587
	09	4,3	4	0	24	OptiStart K-M-09-40-00-D024	335588
	09	4,3	4	0	48	OptiStart K-M-09-40-00-D048	335589
	09	4,3	4	0	60	OptiStart K-M-09-40-00-D060	335590
	09	4,3	4	0	110	OptiStart K-M-09-40-00-D110	335591
	09	4,3	4	0	125	OptiStart K-M-09-40-00-D125	335592
	09	4,3	4	0	220	OptiStart K-M-09-40-00-D220	335593

Three-pole series M mini-contactors with AC control coil with faston terminals

Appearance	Rated current (AC-3, 400 V, ≤55 °C), A	Rated power (AC-3, 400 V, ≤55 °C), kW	Auxiliary contacts		Control coil rated voltage, V AC	Product name	Code
			NO	NC			
	09	4,3	0	1	24	OptiStart K-M-09-30-01-A024-F	335618
	09	4,3	0	1	48	OptiStart K-M-09-30-01-A048-F	335619
	09	4,3	0	1	110	OptiStart K-M-09-30-01-A110-F	335620
	09	4,3	0	1	230	OptiStart K-M-09-30-01-A230-F	335621
	09	4,3	0	1	400	OptiStart K-M-09-30-01-A400-F	335622
	09	4,3	1	0	24	OptiStart K-M-09-30-10-A024-F	335632
	09	4,3	1	0	48	OptiStart K-M-09-30-10-A048-F	335633
	09	4,3	1	0	110	OptiStart K-M-09-30-10-A110-F	335634
	09	4,3	1	0	230	OptiStart K-M-09-30-10-A230-F	335635
	09	4,3	1	0	400	OptiStart K-M-09-30-10-A400-F	335636

Three-pole series M mini-contactors with DC control coil with faston terminals

Appearance	Rated current (AC-3, 400 V, ≤55 °C), A	Rated power (AC-3, 400 V, ≤55 °C), kW	Auxiliary contacts		Control coil rated voltage, V DC	Product name	Code
			NO	NC			
	09	4,3	0	1	12	OptiStart K-M-09-30-01-D012-F	335623
	09	4,3	0	1	24	OptiStart K-M-09-30-01-D024-F	335624
	09	4,3	0	1	48	OptiStart K-M-09-30-01-D048-F	335625
	09	4,3	0	1	60	OptiStart K-M-09-30-01-D060-F	335626
	09	4,3	0	1	110	OptiStart K-M-09-30-01-D110-F	335627
	09	4,3	0	1	125	OptiStart K-M-09-30-01-D125-F	335628
	09	4,3	0	1	220	OptiStart K-M-09-30-01-D220-F	335629
	09	4,3	1	0	12	OptiStart K-M-09-30-10-D012-F	335637
	09	4,3	1	0	24	OptiStart K-M-09-30-10-D024-F	335638
	09	4,3	1	0	48	OptiStart K-M-09-30-10-D048-F	335639
	09	4,3	1	0	60	OptiStart K-M-09-30-10-D060-F	335640
	09	4,3	1	0	110	OptiStart K-M-09-30-10-D110-F	335641
	09	4,3	1	0	125	OptiStart K-M-09-30-10-D125-F	335642
	09	4,3	1	0	220	OptiStart K-M-09-30-10-D220-F	335643

Three-pole series M mini-contactors with DC control coil with reduced power consumption (-Z) with faston terminals

Appearance	Rated current (AC-3, 400 V, ≤55 °C), A	Rated power (AC-3, 400 V, ≤55 °C), kW	Auxiliary contacts		Control coil rated voltage, V DC	Product name	Code
			NO	NC			
	09	4,3	0	1	24	OptiStart K-M-09-30-01-Z024-F	335630
	09	4,3	0	1	48	OptiStart K-M-09-30-01-Z048-F	335631
	09	4,3	1	0	24	OptiStart K-M-09-30-10-Z024-F	335644
	09	4,3	1	0	48	OptiStart K-M-09-30-10-Z048-F	335645

Note: The list of possible accessories is limited. For more detailed information, see the «Maximum combination of auxiliary accessories» section.

Four-pole series M mini-contactors with AC control coil with faston terminals

Appearance	Rated current (AC-3, 400 V, ≤55 °C), A	Rated current (AC-1, 400 V, ≤40 °C), A	Main contacts		Control coil rated voltage, V AC	Product name	Code
			NO	NC			
	09	4,3	4	0	24	OptiStart K-M-09-40-00-A024-F	335646
	09	4,3	4	0	48	OptiStart K-M-09-40-00-A048-F	335647
	09	4,3	4	0	110	OptiStart K-M-09-40-00-A110-F	335648
	09	4,3	4	0	230	OptiStart K-M-09-40-00-A230-F	335649
	09	4,3	4	0	400	OptiStart K-M-09-40-00-A400-F	335650

Four-pole series M mini-contactors with DC control coil with faston terminals

Appearance	Rated current (AC-3, 400 V, ≤55 °C), A	Rated current (AC-1, 400 V, ≤40 °C), A	Main contacts		Control coil rated voltage, V DC	Product name	Code
			NO	NC			
	09	4,3	4	0	12	OptiStart K-M-09-40-00-D012-F	335651
	09	4,3	4	0	24	OptiStart K-M-09-40-00-D024-F	335652
	09	4,3	4	0	48	OptiStart K-M-09-40-00-D048-F	335653
	09	4,3	4	0	60	OptiStart K-M-09-40-00-D060-F	335654
	09	4,3	4	0	110	OptiStart K-M-09-40-00-D110-F	335655
	09	4,3	4	0	125	OptiStart K-M-09-40-00-D125-F	335656
	09	4,3	4	0	220	OptiStart K-M-09-40-00-D220-F	335657

Three-pole series M mini-contactors with AC control coil with solder pins

Appearance	Rated current (AC-3, 400 V, ≤55 °C), A	Rated power (AC-3, 400 V, ≤55 °C), kW	Auxiliary contacts		Control coil rated voltage, V AC	Product name	Code
			NO	NC			
	09	4,3	0	1	24	OptiStart K-M-09-30-01-A024-P	335658
	09	4,3	0	1	48	OptiStart K-M-09-30-01-A048-P	335659
	09	4,3	0	1	110	OptiStart K-M-09-30-01-A110-P	335660
	09	4,3	0	1	230	OptiStart K-M-09-30-01-A230-P	335661
	09	4,3	0	1	400	OptiStart K-M-09-30-01-A400-P	335662
	09	4,3	1	0	24	OptiStart K-M-09-30-10-A024-P	335670
	09	4,3	1	0	48	OptiStart K-M-09-30-10-A048-P	335671
	09	4,3	1	0	110	OptiStart K-M-09-30-10-A110-P	335672
	09	4,3	1	0	230	OptiStart K-M-09-30-10-A230-P	335673
	09	4,3	1	0	400	OptiStart K-M-09-30-10-A400-P	335674

Three-pole series M mini-contactors with DC control coil with solder pins

Appearance	Rated current (AC-3, 400 V, ≤55 °C), A	Rated power (AC-3, 400 V, ≤55 °C), kW	Auxiliary contacts		Control coil rated voltage, V DC	Product name	Code
			NO	NC			
	09	4,3	0	1	12	OptiStart K-M-09-30-01-D012-P	335663
	09	4,3	0	1	24	OptiStart K-M-09-30-01-D024-P	335664
	09	4,3	0	1	48	OptiStart K-M-09-30-01-D048-P	335665
	09	4,3	0	1	60	OptiStart K-M-09-30-01-D060-P	335666
	09	4,3	0	1	110	OptiStart K-M-09-30-01-D110-P	335667
	09	4,3	0	1	125	OptiStart K-M-09-30-01-D125-P	335668
	09	4,3	0	1	220	OptiStart K-M-09-30-01-D220-P	335669
	09	4,3	1	0	12	OptiStart K-M-09-30-10-D012-P	335675
	09	4,3	1	0	24	OptiStart K-M-09-30-10-D024-P	335676
	09	4,3	1	0	48	OptiStart K-M-09-30-10-D048-P	335677
	09	4,3	1	0	60	OptiStart K-M-09-30-10-D060-P	335678
	09	4,3	1	0	110	OptiStart K-M-09-30-10-D110-P	335679
	09	4,3	1	0	125	OptiStart K-M-09-30-10-D125-P	335680
	09	4,3	1	0	220	OptiStart K-M-09-30-10-D220-P	335681

Four-pole series M mini-contactors with AC control coil with solder pins

Appearance	Rated current (AC-3, 400 V, ≤55 °C), A	Rated current (AC-1, 400 V, ≤40 °C), A	Main contacts		Control coil rated voltage, V AC	Product name	Code
			NO	NC			
	09	4,3	4	0	24	OptiStart K-M-09-40-00-A024-P	335682
	09	4,3	4	0	48	OptiStart K-M-09-40-00-A048-P	335683
	09	4,3	4	0	110	OptiStart K-M-09-40-00-A110-P	335684
	09	4,3	4	0	230	OptiStart K-M-09-40-00-A230-P	335685
	09	4,3	4	0	400	OptiStart K-M-09-40-00-A400-P	335686

Four-pole series M mini-contactors with DC control coil with solder pins

Appearance	Rated current (AC-3, 400 V, ≤55 °C), A	Rated current (AC-1, 400 V, ≤40 °C), A	Main contacts		Control coil rated voltage, V DC	Product name	Code
			NO	NC			
	09	4,3	4	0	12	OptiStart K-M-09-40-00-D012-P	335687
	09	4,3	4	0	24	OptiStart K-M-09-40-00-D024-P	335688
	09	4,3	4	0	48	OptiStart K-M-09-40-00-D048-P	335689
	09	4,3	4	0	60	OptiStart K-M-09-40-00-D060-P	335690
	09	4,3	4	0	110	OptiStart K-M-09-40-00-D110-P	335691
	09	4,3	4	0	125	OptiStart K-M-09-40-00-D125-P	335692
	09	4,3	4	0	220	OptiStart K-M-09-40-00-D220-P	335693

Series MR mini-contactor relays

Series MR mini-contactor relays with AC control coil with screw terminals

Appearance	Main contacts		Control coil rated voltage, V AC	Product name	Code
	NO	NC			
	2	2	24	OptiStart K-MR-22-A024	335791
	2	2	48	OptiStart K-MR-22-A048	335792
	2	2	110	OptiStart K-MR-22-A110	335793
	2	2	230	OptiStart K-MR-22-A230	335794
	2	2	400	OptiStart K-MR-22-A400	335795
	3	1	24	OptiStart K-MR-31-A024	335796
	3	1	48	OptiStart K-MR-31-A048	335797
	3	1	110	OptiStart K-MR-31-A110	335798
	3	1	230	OptiStart K-MR-31-A230	335799
	3	1	400	OptiStart K-MR-31-A400	335800
	4	0	24	OptiStart K-MR-40-A024	335802
	4	0	48	OptiStart K-MR-40-A048	335803
	4	0	110	OptiStart K-MR-40-A110	335804
	4	0	230	OptiStart K-MR-40-A230	335805
	4	0	400	OptiStart K-MR-40-A400	335806

Series MR mini-contactor relays with DC control coil with screw terminals

Appearance	Main contacts		Control coil rated voltage, V DC	Product name	Code
	NO	NC			
	2	2	12	OptiStart K-MR-22-D012	335766
	2	2	24	OptiStart K-MR-22-D024	335767
	2	2	48	OptiStart K-MR-22-D048	335768
	2	2	60	OptiStart K-MR-22-D060	335769
	2	2	110	OptiStart K-MR-22-D110	335770
	2	2	125	OptiStart K-MR-22-D125	335771
	2	2	220	OptiStart K-MR-22-D220	335772
	3	1	12	OptiStart K-MR-31-D012	335775
	3	1	24	OptiStart K-MR-31-D024	335776
	3	1	60	OptiStart K-MR-31-D060	335777
	3	1	110	OptiStart K-MR-31-D110	335778
	3	1	125	OptiStart K-MR-31-D125	335779
	3	1	220	OptiStart K-MR-31-D220	335780
	4	0	12	OptiStart K-MR-40-D012	335783
	4	0	24	OptiStart K-MR-40-D024	335784
	4	0	60	OptiStart K-MR-40-D060	335785
	4	0	110	OptiStart K-MR-40-D110	335786
	4	0	125	OptiStart K-MR-40-D125	335787
	4	0	220	OptiStart K-MR-40-D220	335788
	3	1	48	OptiStart K-MR-31-D048	335801
	4	0	48	OptiStart K-MR-40-D048	335807

Series MR mini-contactor relays with DC control coil with reduced power consumption (-Z) with screw terminals

Appearance	Main contacts		Control coil rated voltage, V DC	Product name	Code
	NO	NC			
	2	2	24	OptiStart K-MR-22-Z024	335773
	2	2	48	OptiStart K-MR-22-Z048	335774
	3	1	24	OptiStart K-MR-31-Z024	335781
	3	1	48	OptiStart K-MR-31-Z048	335782
	4	0	24	OptiStart K-MR-40-Z024	335789
	4	0	48	OptiStart K-MR-40-Z048	335790

Note: The list of possible accessories is limited. For more detailed information, see the "Maximum combination of auxiliary accessories» section.

Series MR mini-contactor relays with AC control coil with faston terminals

Appearance	Main contacts		Control coil rated voltage, V AC	Product name	Code
	NO	NC			
	2	2	24	OptiStart K-MR-22-A024-F	335808
	2	2	48	OptiStart K-MR-22-A048-F	335809
	2	2	110	OptiStart K-MR-22-A110-F	335810
	2	2	230	OptiStart K-MR-22-A230-F	335811
	2	2	400	OptiStart K-MR-22-A400-F	335812
	3	1	24	OptiStart K-MR-31-A024-F	335822
	3	1	48	OptiStart K-MR-31-A048-F	335823
	3	1	110	OptiStart K-MR-31-A110-F	335824
	3	1	230	OptiStart K-MR-31-A230-F	335825
	3	1	400	OptiStart K-MR-31-A400-F	335826
	4	0	24	OptiStart K-MR-40-A024-F	335836
	4	0	48	OptiStart K-MR-40-A048-F	335837
	4	0	110	OptiStart K-MR-40-A110-F	335838
	4	0	230	OptiStart K-MR-40-A230-F	335839
	4	0	400	OptiStart K-MR-40-A400-F	335840

Series MR mini-contactor relays with DC control coil with faston terminals

Appearance	Main contacts		Control coil rated voltage, V DC	Product name	Code
	NO	NC			
	2	2	12	OptiStart K-MR-22-D012-F	335813
	2	2	24	OptiStart K-MR-22-D024-F	335814
	2	2	48	OptiStart K-MR-22-D048-F	335815
	2	2	60	OptiStart K-MR-22-D060-F	335816
	2	2	110	OptiStart K-MR-22-D110-F	335817
	2	2	125	OptiStart K-MR-22-D125-F	335818
	2	2	220	OptiStart K-MR-22-D220-F	335819
	3	1	12	OptiStart K-MR-31-D012-F	335827
	3	1	24	OptiStart K-MR-31-D024-F	335828
	3	1	48	OptiStart K-MR-31-D048-F	335829
	3	1	60	OptiStart K-MR-31-D060-F	335830
	3	1	110	OptiStart K-MR-31-D110-F	335831
	3	1	125	OptiStart K-MR-31-D125-F	335832
	3	1	220	OptiStart K-MR-31-D220-F	335833
	4	0	12	OptiStart K-MR-40-D012-F	335841
	4	0	24	OptiStart K-MR-40-D024-F	335842
	4	0	48	OptiStart K-MR-40-D048-F	335843
	4	0	60	OptiStart K-MR-40-D060-F	335844
	4	0	110	OptiStart K-MR-40-D110-F	335845
	4	0	125	OptiStart K-MR-40-D125-F	335846
	4	0	220	OptiStart K-MR-40-D220-F	335847

Series MR mini-contactor relays with DC control coil with reduced power consumption (-Z) with faston terminals

Appearance	Main contacts		Control coil rated voltage, V DC	Product name	Code
	NO	NC			
	2	2	24	OptiStart K-MR-22-Z024-F	335820
	2	2	48	OptiStart K-MR-22-Z048-F	335821
	3	1	24	OptiStart K-MR-31-Z024-F	335834
	3	1	48	OptiStart K-MR-31-Z048-F	335835
	4	0	24	OptiStart K-MR-40-Z024-F	335848
	4	0	48	OptiStart K-MR-40-Z048-F	335849

Note: The list of possible accessories is limited. For more detailed information, see the «Maximum combination of auxiliary accessories» section.

Technical specification

Series M mini-contactors and series MR mini-contactor relays

Type			MR	M-06	M-09	M-12
Specifications of power poles						
Number of power poles, pcs.			4	3	3-4	3
Rated insulation voltage U_i, V			690 (1)			
Rated pulse withstand voltage U_{imp}, kV			–	6		
Operating frequency, Hz			25...400 (2)			
Operating current, A	Outdoor thermal stability current Ith (AC-1) at	≤40 °C	see data in table below	16	20	20
	AC-3 (≤440 V ≤55 °C)		–	6	9	12
	AC-4 (400 V) (3)		–	3,3	4	4,8
Rated short-time withstand current I_{cw} 10 s (IEC/EN/BS 60947-1), A			–	96	96	96
Rated fuse current for short-circuit protection at 400V — 50 kA, A		gG	–	16	20	20
		aM	–	6	10	16
Rated making capacity (effective value), A			–	92	92	120
Rated breaking capacity, A		≤440 V	–	72	72	96
		500 V	–	72	72	72
		690 V	–	72	72	72
Resistance and heat dissipation per pole	R	mOhm	–	10	10	10
	I_{th}	W	–	2,6	4	4
	AC-3	W	–	0,36	0,81	1,44
Specifications of connections		Type	Screw with washer			
		A	7,5	7,5	7,5	7,5
		B	4	4	4	4
		Screw	M3	M3	M3	M3
		Screwdriver type	PH 2	PH 2	PH 2	PH 2
		Type	–	–	Faston terminals 1x6,35 — 2x2,8	–
		Type	–	–	Soldered terminals on PCB (4)	–
Min - max tightening torque of power pole terminals, Nm			0,8–1,0	0,8–1,0	0,8–1,0	0,8–1,0
Min - max tightening torque of coil terminals, Nm			0,8–1,0	0,8–1,0	0,8–1,0	0,8–1,0
		Screwdriver type	PH 2	PH 2	PH 2	PH 2
Cross-section of conductors (1 or 2 conductors), min ... max, mm²	flexible conductors without lugs		0,75...2,5			
	flexible conductors with lugs		2x1,5 или 1x2,5			
	flexible conductors with fork-type lugs		2x1,5 или 1x2,5			
Power terminals protection degree as per IEC/EN/BS 60529			IP20 (5)	IP20 (5)	IP20 (5)	IP20 (5)
Specifications of built-in auxiliary contacts						
Contactor types, pcs.			Depending on configuration	1 NO or 1 NC depending on configuration (6)		
Conditional thermal current I_{th}, A			10			
Specifications as per IEC/EN/BS 60947-5-1		AC	A600			
		DC	Q600	P600		
Operating conditions						
Ambient temperature, °C	during operation		-50...+70			
	during storage		-60...+80			
Maximum height above sea level, m			3000			
Installation position	rated		In a vertical plane			
	permissible		± 30°			
Mounting method			Screw or on 35 mm din-rail			

(1) For mini-contactors MCP..., rated voltage Ui is 500 V
(1) At frequencies above 60 Hz with derating.
(3) For utilization category AC-4, the switching life is reduced down to 50 thous. cycles.
(4) The sizes and installation dimensions are presented in the "Overall and Installation Dimensions" section.
(4) Protection degree IP20 is provided for devices connected by conductors with a cross-section of at least 0.75 mm²
(6) Mechanical characteristics correspond to the data for power poles

Type			MR	M-06	M-09	M-12
Specifications of magnetic system						
AC control coil						
Rated voltage at 50/60 Hz, V			12...575			
Rated control coil voltage ranges						
Coil with 50/60 Hz supply frequency, % U_s	50 Hz	closure	75...115			
		opening	20...55			
	60 Hz	closure	80...115			
		opening	20...55			
Average power consumption at 20 °C						
Coil with 50/60 Hz supply frequency, VA	50 Hz	switching	30			
		retention	4			
	60 Hz	switching	25			
		retention	3			
Heat dissipation at ≤20 °C 50 Hz, W			0,95			
DC control coil						
Rated voltage, V			6...250			
Control coil rated voltage ranges, % U_s						
Closure	three-pole version		75...115			
Opening	all versions		10...20	10...25		
Average power consumption at 20 °C (switching / retention), W	DC coil		3,2			
	Version – Z		2,3			
Trip time, ms						
Average time at rated voltage control U_s	AC control coil	closure NO	12...21			
		opening NO	9...18			
		closure NC	17...26			
		opening NC	7...17			
	DC control coil	closure NO	18...25			
		opening NO	2...3			
		closure NC	3...5			
		opening NC	11...17			
Wear resistance, mln cycles						
Mechanical			20			
Electrical (I_e at 400 V AC-3)			0,5			
Maximum switching frequency, cycle/h			3600			

Electrical characteristics of built-in auxiliary contacts and series FR contactor relays as per IEC/EN/BS 60947-5-1

Designation	Utilization category as per IEC/EN	Enclosed thermal current I_{the}	Rated operating current, A at rated operating voltage U_e										Rated power	
			120 V AC		240 V AC		380 V AC		480 V AC		600 V AC		VA, max	
Alternating current		[A]	Closure	Opening	Closure	Opening	Closure	Opening	Closure	Opening	Closure	Opening	Closure	Opening
A600	AC-15	10	60	6	30	3	19	1,9	15	1,5	12	1,2	7200	720
Direct current			Maximum direct current upon closure and opening										W max	
			125 V DC	250 V DC	301 V DC	400 V DC	500 V DC	600 V DC					300 V or less	
Q600	DC-13	2,5	0,55	0,27	0,1	0,15	0,13	0,1					69	69

Specifications of power poles

Utilization category AC-3: squirrel-cage motor, tripping at a rated current

Maximum operating power at ambient temperature ≤55 °C.
Information is provided in the summary table in the «Technical specifications» section, «Contactors OptiStart K-F» chapter.

Electrical endurance at AC3 ≤ 440 V

Information is provided in the summary table in the «Technical specifications» section, «Contactors OptiStart K-F» chapter.

DC switching

Maximum operating power at ambient temperature ≤55 °C.
Information is provided in the summary table in the «Technical specifications» section, «Contactors OptiStart K-F» chapter.

Switching of lighting circuits

Information is provided in the summary table in the «Technical specifications» section, «Contactors OptiStart K-F» chapter.

Performance characteristics of accessories

Type			Auxiliary contact unit	
			MX-10.. MX-11..	MX-F10..
Conditional thermal current I_{th}, A			10	10
Rated insulation voltage U_i, B			690	690
Type of connection	Screw	Type	M3	–
		Width, mm	6,9	
	Faston	Dimensions	–	1x6,3 mm 2x2,8 mm
Tightening torque, Nm			0,8...1	–
Maximum cross-section (1 or 2 conductors), mm²	Flexible without lug		2,5	2,5
	Flexible with lug		2,5	2,5
Ingress protection degree			IP20 (1)	IP20
Type as per IEC/EN/BS 60947-5-1		AC	A600	A600
		DC	Q600	Q600
Mechanical wear resistance, mln cycles			20	20

Accessories

Auxiliary contact units

Front mounted auxiliary contact units with screw terminals

Appearance	Compatible devices	Auxiliary contacts		Product name	Code
		NO	NC		
	M...; MC...; MR...	0	2	OptiStart K-MX-1002 (1)	335850
	M...; MC...; MR...	1	1	OptiStart K-MX-1011 (1)	335852
	M...; MC...; MR...	2	0	OptiStart K-MX-1020 (1)	335854
	M...; MC...; MR...	0	4	OptiStart K-MX-1004 (2)	335851
	M...; MC...; MR...	1	3	OptiStart K-MX-1013 (2)	335853
	M...; MC...; MR...	2	2	OptiStart K-MX-1022 (1)	335855
	M...; MC...; MR...	3	1	OptiStart K-MX-1031 (1)	335856
	M...; MC...; MR...	4	0	OptiStart K-MX-1040 (1)	335857
	MC...	1	1	OptiStart K-MX-1111 (3)	335858
	MC...	2	2	OptiStart K-MX-1122 (3)	335859

Note: For possible combinations and configurations, see the «Maximum combination of auxiliary accessories» section.
(1) Installation on mini-contactors with reduced power consumption coil (...Z) is not permitted
(2) Installation on mini-contactors with DC coil (...D; ...Z) is not permitted
(3) Installation is only allowed on the left side of the left contactor as part of the reversing assembly MC...

Front mounted auxiliary contact units with faston terminals

Appearance	Compatible devices	Auxiliary contacts		Product name	Code
		NO	NC		
	M...; MC...; MR...	0	2	OptiStart K-MX-F1002 (1)	335870
	M...; MC...; MR...	0	4	OptiStart K-MX-F1004 (2)	335871
	M...; MC...; MR...	1	1	OptiStart K-MX-F1011 (1)	335872
	M...; MC...; MR...	1	3	OptiStart K-MX-F1013 (2)	335873
	M...; MC...; MR...	2	0	OptiStart K-MX-F1020 (1)	335874
	M...; MC...; MR...	2	2	OptiStart K-MX-F1022 (1)	335875
	M...; MC...; MR...	3	1	OptiStart K-MX-F1031 (1)	335876
	M...; MC...; MR...	4	0	OptiStart K-MX-F1040 (1)	335877

Note: For possible combinations and configurations, see the «Maximum combination of auxiliary accessories» section.
(1) Installation on mini-contactors with reduced power consumption coil (...Z) is not permitted
(2) Installation on mini-contactors with DC coil (...D; ...Z) is not permitted

Interlock modules for contactors

Appearance	Compatible devices	Type	Mounting method	Product name	Code
	M...; MC...; MR...	Mechanical	Front	OptiStart K-FX-5000	335361

Note: Installation on mini-contactors with reduced power consumption coil (...Z) is not permitted

Surge arresters

Appearance	Compatible devices	Type	Rated voltage	Product name	Code
	M...; MC...; MR...	Variable resistor	up to 48 V AC/DC	OptiStart K-MX-77048	335861
	M...; MC...; MR...	Variable resistor	48–125 V AC/DC	OptiStart K-MX-77125	335862
	M...; MC...; MR...	Variable resistor	125–240 V AC/DC	OptiStart K-MX-77240	335863
	M...; MC...; MR...	RC	up to 48 V DC	OptiStart K-MX-79048	335865
	M...; MC...; MR...	RC	48–125 V DC	OptiStart K-MX-79125	335866
	M...; MC...; MR...	RC	125–240 V DC	OptiStart K-MX-79240	335867
	M...; MC...; MR...	RC	240–415 V DC	OptiStart K-MX-79415	335868
	M...; MC...; MR...	Diode	up to 225 V DC	OptiStart K-MX-78225	335864

Busbar connection adapters

Appearance	Compatible devices	Type	Product name	Code
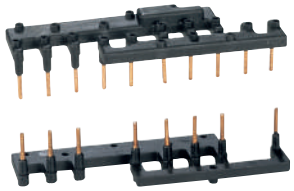	M...; MC...; MR...	For star-delta connection of reversing series MC mini-contactors	OptiStart K-MX-9021	337847
	M...; MC...; MR...	For reversing series MR mini-contactors	OptiStart K-MX-9022	337850

Protective cover

Appearance	Compatible devices	Ingress protection degree	Product name	Code
	M...; MC...; MR...	IP40	OptiStart K-MX-8000	335869

Note: Installation is only permitted on mini-contactors and mini-contactor relays with screw terminals, without auxiliary contacts, without surge arrester and interlock. Increases the protection degree on the front side.

Jumpers for parallel pole connection

Appearance	Compatible devices	Number of poles	Availability of insulation	Product name	Code
	M...; MC...; MR...	2	+	OptiStart K-MX-323 (1)	335878
	M...; MC...; MR...	2	+	OptiStart K-MX-324	335879
	M...; MC...; MR...	4	+	OptiStart K-MX-325 (1)	335880
	M...; MC...; MR...	4	+	OptiStart K-MX-326	335881

Note: Installation simultaneously with a protective casing is unacceptable

Maximum combination of optional accessories

Series M mini-contactors with AC and DC coil

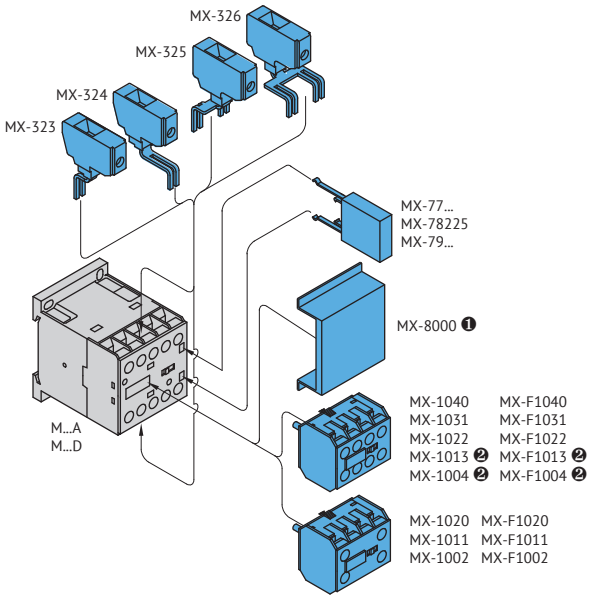

(1) Installation is only permitted on mini-contactors and mini-contactor relays with screw terminals, without auxiliary contacts, without surge arrester and interlock.
(2) Installation on mini-contactors with DC coil is not permitted

Series M mini-contactors with reduced power consumption (-Z)

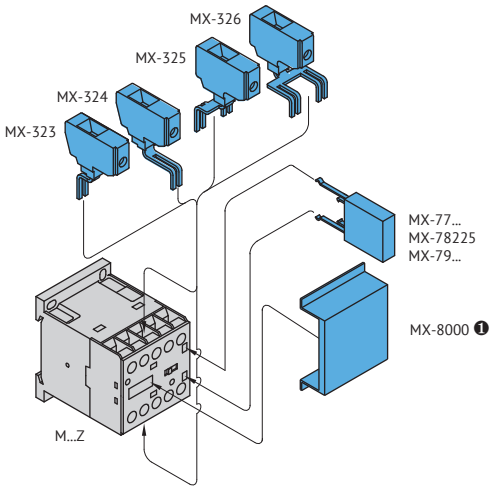

Reversing mini-contactors

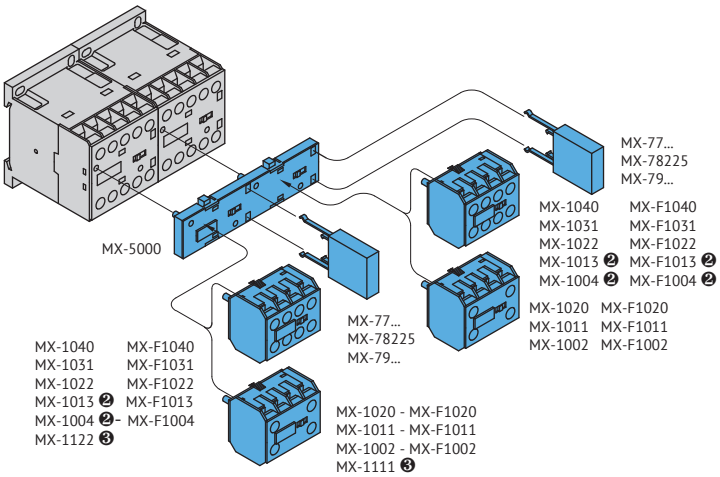

(2) Installation on mini-contactors with DC coil (...D) is not permitted
(3) Installation is only allowed on the left side of the left contactor as part of the reversing assembly

Busbar adapters for reversing starters

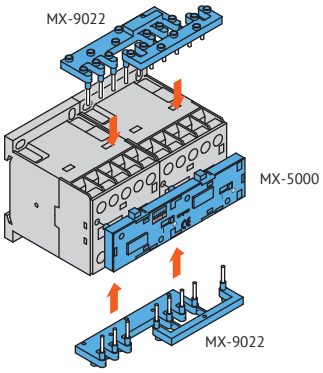

Busbar adapters for star-delta starters

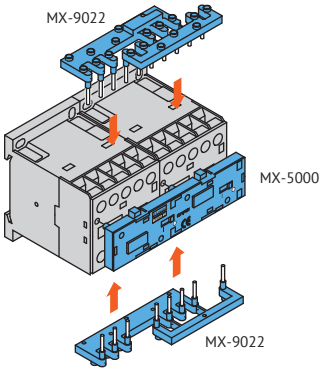

Overall dimensions (mm)

Series M mini-contactors and series MR mini-contactor relays with AC and DC coil

Series M mini-contactors and series MR mini-contactor relays with screw terminals

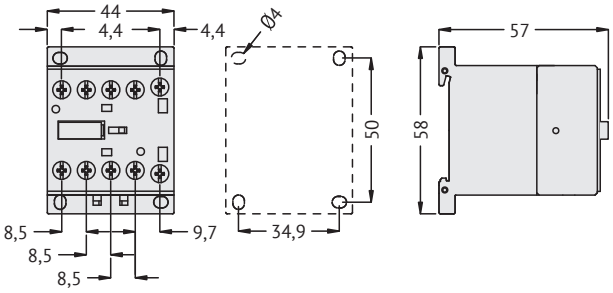

Three-pole series mmini-contactors with screw terminals with thermal relay TF-M...

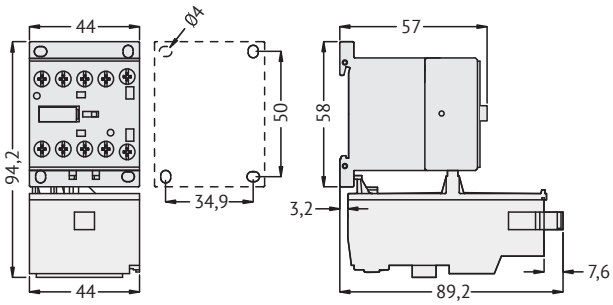

Series M mini-contactors and series MR mini-contactor relays with solderable terminals

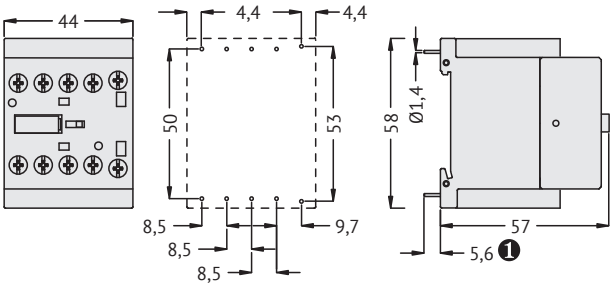

(1) Recommended PCB hole diameter: 1.7...2 mm

Series M mini-contactors and series MR mini-contactor relays with faston terminals

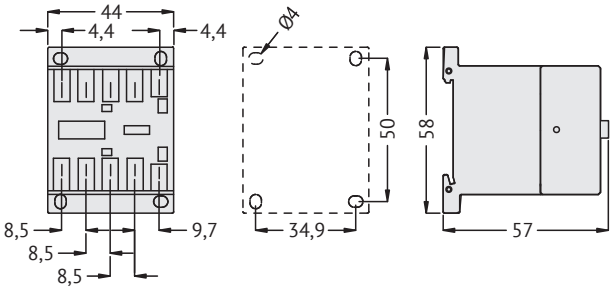

Accessories for series M mini-contactors and series MR mini-contactor relays

Auxiliary contacts
MX-10... MX-F10 (1)

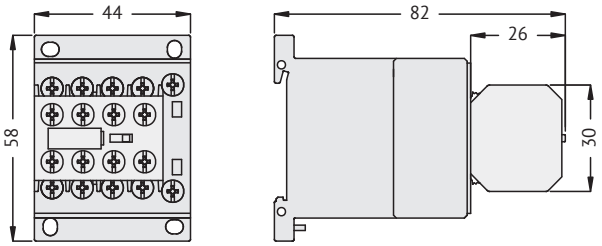

Surge arresters
MX-77...; MX-78...; MX-79...

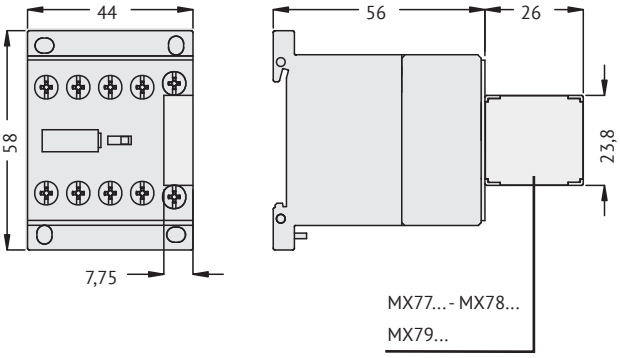

Interlock module
MX-5000 with contacts FX-10... and surge arresters FX-7..

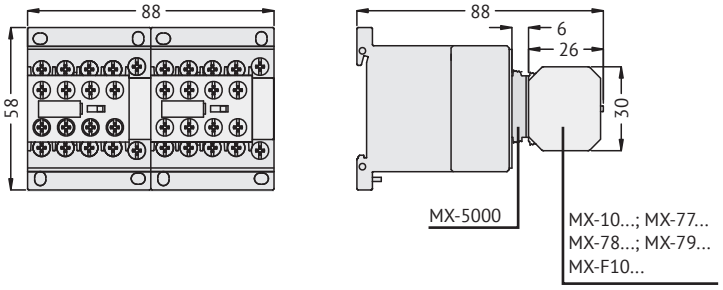

Protective casing
MX-8000

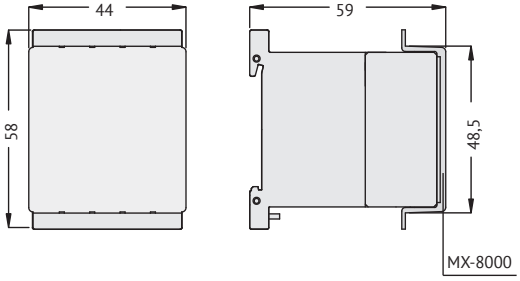

Buses for parallel connection
MX-323; MX-324

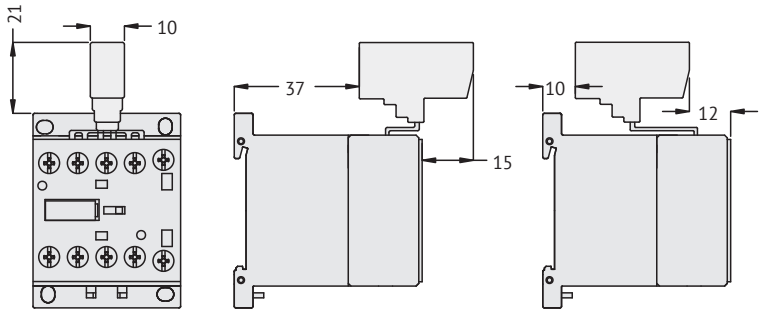

MX-325; MX-326

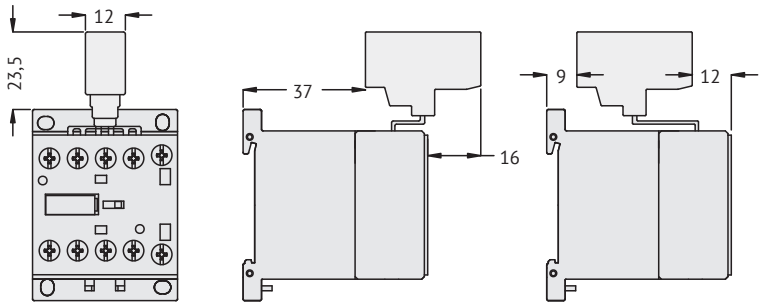

Electric schematics

Three-pole mini-contactors

M-06-30-10...M-12-30-10

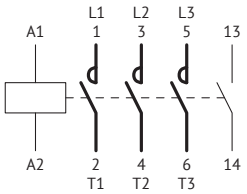

M-06-30-01...M-12-30-01

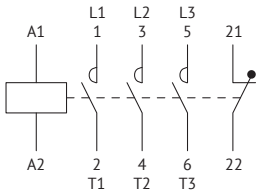

Four-pole mini-contactors with 4 NO contacts

M-06-40...M-12-40

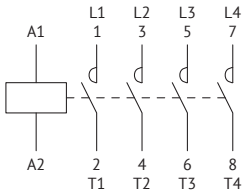

Four-pole mini-contactors with 2 NO + 2 NC contacts

M-06-40...M-12-40

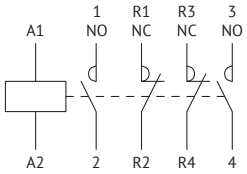

Mini-contactor relays

MR-40

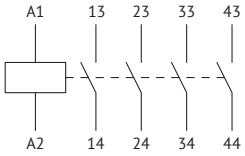

MR-31

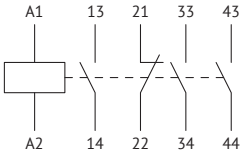

MR-22

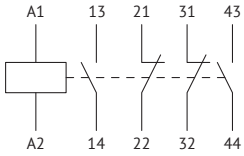

Accessories for series M mini-contactors and series MR mini-contactor relays

Auxiliary contacts

MX-1002
MX-F1002

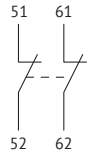

MX-1011
MX-F1011

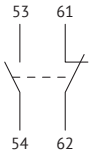

MX-1020
MX-F1020

MX-1004
MX-F1004

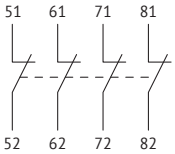

MX-1013
MX-F1013

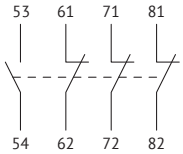

MX-1022
MX-F1022

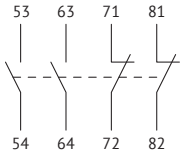

MX-1031
MX-F1031

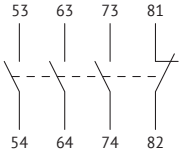

MX-1040
MX-F1040

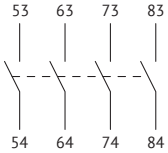

Special auxiliary contacts

MX-1111

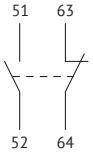

MX-1122

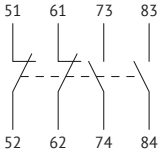

Surge arresters

MX-77...

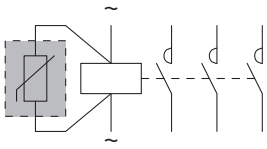

MX-78...

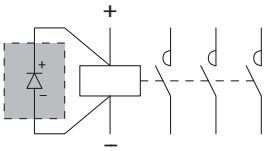

MX-79...

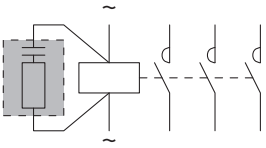

Connection adapters

MX-9021

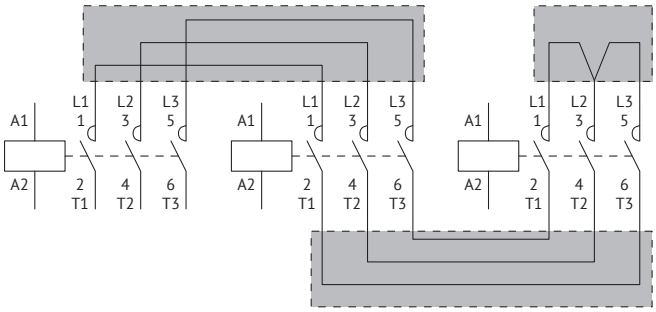

MX-9021

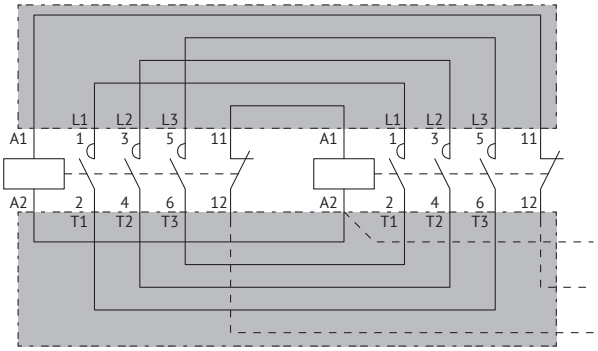

OptiStart TF

↗ Overload relay

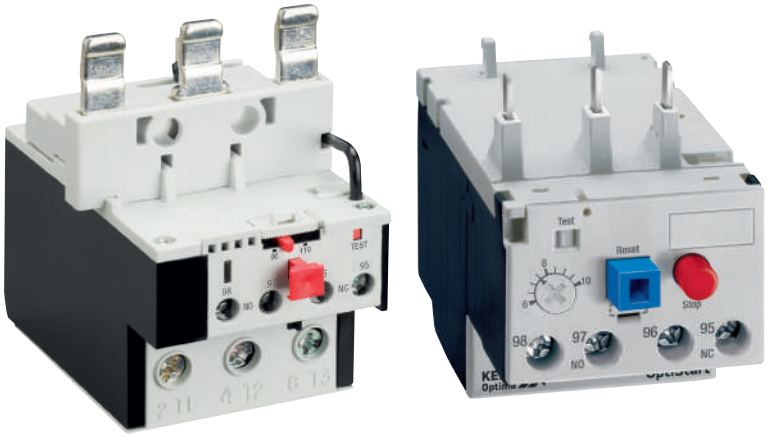

Designation

OptiStart TF - U A P 150 - 82

1 2 3 4 5 6 7

1	Group	OptiStart — Motor control and protection equipment		
2	Series	OptiStart TF — Overload relays		
3	Version	**U** — Thermal overload relay for series (A)F contactors	**E** — Electronic overload relay for series (A)F contactors	**M** — Thermal overload relay for series M mini-contactor
4	Reset method	A — Automatic reset after emergency * * The reset method of models TF-...38, TF-...400 and TF-...420 can be configured		
5	Phase interruption sensitivity	P — Relay sensitive to phase interruption		
6	Maximum compatible contactor size	For information on the overload relay and contactor relay compatibility, see the «Selection guide» section. Series TF-M... thermal relays or mini-contactors do not contain information on this item in their name.		
7	Maximum rated current setpoint	For information on the rated current setpoint ranges, see the «Selection guide» section.		

Series advantages

Possibility of selecting a reset method and precise identification of the selected solution
The reset method of series TF-...38, TF-...400, TF-...420 thermal relays can be configured after an emergency shutdown to enable configuring the relay based on customer requirements. The retractable switching button facilitates visual identification of the selected method.

Easy relay installation
The output contact of the overload relay is connected to the contactor coil terminal via a rigid electrical connection to make the installation easy and enable connection in one action without the need for other external connections.

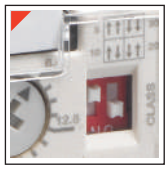

Electronic relays with trip class adjustment
The range of overload relays includes electronic overload relays, whose distinctive features include a possibility to select a trip class to enable the relay fine-tuning depending on the load type and startup conditions.

Mounting adapter for separate relay installation
Overload relays can be mounted on a din-rail using a separate mounting adapter and connected using conductors to any equipment, which ensures high flexibility of their application.

Protective casing
When protective casing is used, protection is provided against unauthorized setting changes and accidental pressing of the «Reset» and «Stop» buttons.

Thermal relay sealing device
Using a sealing accessory prevents unauthorized changes to the rated current setting of the overload relay.

Items

Thermal overload relays

For direct installation on mini-contactors M

Appearance	Rated current, A	Reset method	Phase interruption sensitivity	Product name	Code
	0,09...0,15	Automatic	Yes	OptiStart TF-MAP-0,15	336015
	0,14...0,23	Automatic	Yes	OptiStart TF-MAP-0,23	336016
	0,2...0,33	Automatic	Yes	OptiStart TF-MAP-0,33	336017
	0,3...0,5	Automatic	Yes	OptiStart TF-MAP-0,5	336018
	0,45...0,75	Automatic	Yes	OptiStart TF-MAP-0,75	336019
	0,6...1,0	Automatic	Yes	OptiStart TF-MAP-1,0	336020
	0,9...1,5	Automatic	Yes	OptiStart TF-MAP-1,5	336023
	1,4...2,3	Automatic	Yes	OptiStart TF-MAP-2,3	336024
	2,0...3,3	Automatic	Yes	OptiStart TF-MAP-3,3	336025
	3,0...5,0	Automatic	Yes	OptiStart TF-MAP-5,0	336026
	4,5...7,5	Automatic	Yes	OptiStart TF-MAP-7,5	336027
	6,0...10	Automatic	Yes	OptiStart TF-MAP-10	336021
	9...15	Automatic	Yes	OptiStart TF-MAP-15	336022

Note: to facilitate connection between auxiliary contact H3 of thermal relay TF-M... and terminal A2 of the contactor, insert a conductor into the corresponding technological hole as shown below.

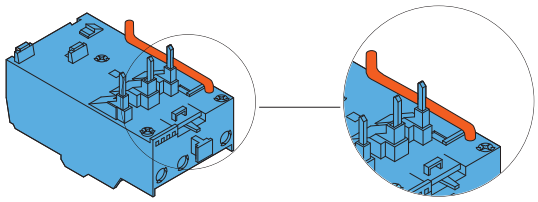

For direct installation on contactors F-09...F-38

Appearance	Rated current, A	Reset method	Phase interruption sensitivity	Product name	Code
	0,1...0,16	Manual or automatic (adjustable)	Yes	OptiStart TF-UAP38-0,16	336061
	0,16...0,25	Manual or automatic (adjustable)	Yes	OptiStart TF-UAP38-0,25	336062
	0,25...0,4	Manual or automatic (adjustable)	Yes	OptiStart TF-UAP38-0,4	336063
	0,4...0,63	Manual or automatic (adjustable)	Yes	OptiStart TF-UAP38-0,63	336064
	0,63...1,0	Manual or automatic (adjustable)	Yes	OptiStart TF-UAP38-1,0	336065
	1,0...1,6	Manual or automatic (adjustable)	Yes	OptiStart TF-UAP38-1,6	336066
	1,6...2,5	Manual or automatic (adjustable)	Yes	OptiStart TF-UAP38-2,5	336067
	2,5...4,0	Manual or automatic (adjustable)	Yes	OptiStart TF-UAP38-4,0	336068
	4,0...6,5	Manual or automatic (adjustable)	Yes	OptiStart TF-UAP38-6,5	336069
	6,3...10	Manual or automatic (adjustable)	Yes	OptiStart TF-UAP38-10	336070
	9,0...14	Manual or automatic (adjustable)	Yes	OptiStart TF-UAP38-14	336071
	13...18	Manual or automatic (adjustable)	Yes	OptiStart TF-UAP38-18	336072
	17...23	Manual or automatic (adjustable)	Yes	OptiStart TF-UAP38-23	336073
	20...25	Manual or automatic (adjustable)	Yes	OptiStart TF-UAP38-25	336074
	24...32	Manual or automatic (adjustable)	Yes	OptiStart TF-UAP38-32	336075
	32...38	Manual or automatic (adjustable)	Yes	OptiStart TF-UAP38-38	336076

Note: Din-rail installation is possible when FX-3804 mounting adapter is used

For direct installation on contactors (A)F-40...(A)F-94

Appearance	Rated current, A	Reset method	Phase interruption sensitivity	Product name	Code
	20...33	Автоматический	Да	OptiStart TF-UAP94-33	336089
	28...42	Автоматический	Да	OptiStart TF-UAP94-42	336090
	35...50	Автоматический	Да	OptiStart TF-UAP94-50	336091
	46...65	Автоматический	Да	OptiStart TF-UAP94-65	336092
	60...82	Автоматический	Да	OptiStart TF-UAP94-82	336093
	70...95	Автоматический	Да	OptiStart TF-UAP94-95	336094

Note: Din-rail installation is possible when FX-270 mounting adapter is used

For direct installation on contactors (A)F-95...(A)F-150.

Appearance	Rated current, A	Reset method	Phase interruption sensitivity	Product name	Code
	60...82	Automatic	Yes	OptiStart TF-UAP150-82	336086
	70...95	Automatic	Yes	OptiStart TF-UAP150-95	336087
	90...110	Automatic	Yes	OptiStart TF-UAP150-110	336088

Note: Din-rail installation is possible when FX-270 mounting adapter is used

For separate installation jointly with contactors AF-160...AF-400

Appearance	Rated current, A	Reset method	Phase interruption sensitivity	Product name	Code
	60...100	Manual or automatic (adjustable)	Yes	OptiStart TF-UAP400-100	336057
	75...125	Manual or automatic (adjustable)	Yes	OptiStart TF-UAP400-125	336058
	90...150	Manual or automatic (adjustable)	Yes	OptiStart TF-UAP400-150	336059
	120...200	Manual or automatic (adjustable)	Yes	OptiStart TF-UAP400-200	336060
	150...250	Manual or automatic (adjustable)	Yes	OptiStart TF-UAP420-250	336077
	180...300	Manual or automatic (adjustable)	Yes	OptiStart TF-UAP420-300	336078
	250...420	Manual or automatic (adjustable)	Yes	OptiStart TF-UAP420-420	336079

Electronic overload relays

General information

The electronic overload relays TF-EAP38 feature a wide current range and high tripping accuracy. The relays are suitable for all motor starting conditions due to the possibility of adjusting the trip class. The front panel contains a switch for selecting manual or automatic reset and an element for controlling forced stop (STOP). The equipment does not require a separate power supply, since it is powered from the protected circuit.

Performance characteristics

– rated insulation voltage of the main circuit U_i: 1000 V;
– rated insulation voltage of output circuit U_i: 690 V;
– rated pulse withstand voltage: 8 kV;
– rated frequency: 50/60 Hz;
– power dissipation per phase: <1 W;
– selectable trip classes: 5-10-20-30;
– phase interruption sensitivity;
– installation position: any;
– possibility of sealing the adjustment element and trip class switch;
– protection degree: IP20.

For direct installation on contactors F-09...F-38

Appearance	Rated current, A	Reset method	Phase interruption sensitivity	Product name	Code
	0,4...2,0	Manual or automatic (adjustable)	Yes	OptiStart TF-EAP38-2,0	336095
	1,6...8,0	Manual or automatic (adjustable)	Yes	OptiStart TF-EAP38-8,0	336096
	6,4...32	Manual or automatic (adjustable)	Yes	OptiStart TF-EAP38-32	336097
	9,0...45	Manual or automatic (adjustable)	Yes	OptiStart TF-EAP38-42	336098

Note: Din-rail installation is possible when FX-3804 mounting adapter is used

Technical specification

		TF-M..	TF-U..38	TF-U..94	TF-U..400	TF-U..420	TF-E..38
Power circuit specifications							
Rated insulation voltage U_i, B		690	690	690	1000	1000	1000
Rated pulse withstand voltage U_{imp}, kV		8 (1)	6	8 (1)	6	6	6
Operating frequency, Hz		0...400	0...400	0...400	50...60	50...60	50...60
Trip type		10A			10A		5-10-20-30
Special features		Test button - Trip indicator					
Connection diagram		Direct			With current transformers		
Connection terminals	type	Screw with washer		Wire clamp	Screw with flat washer		Screw with washer
	screw	M4	M4	M5	M8	M10	M4
	width, mm	9,8	12,6	9	20	25	12
	screwdriver type	PH 2	PH 2	PH 2	13 мм	13 мм	PH 2
Tightening torque of power terminals, Nm		2,3	2...2,5	3,9	18	35	3,1
Maximum cross-section of conductors, mm^2 and busbar size, mm	flexible without lug	6	10	35	–	–	16
	flexible with lug	10	6	–	150	2 x 150	10
	busbar	–	–	–	25 x 3	30 x 5	–
Power dissipation per phase, W		0,7...2,4	0,7...2,4	2,0...4,2	0,7...2,4	0,7...2,4	<1
Output circuit specifications							
Number of contacts, pcs.	NO	1					
	NC	1					
Rated insulation voltage, V		690					
Conditional outdoor thermal current I_{th}, A		10			10		5
Connection terminals	screw with washer	M3,5					
	width, mm	8					7
	screwdriver type	PH 1	PH 2	PH 1	PH 2	–	PH 2
Maximum conductor cross-section, $мм^2$	flexible without lug	2,5					
	flexible with lug	2,5					
Tightening torque of output circuit terminals, Nm		1	0,8...1	1	0,8...1	0,8...1	0,8
Type as per IEC/EN/BS 60947-5-1		B600-P600 (2)	B600-R300	B600-P600 (2)	B600-R300	B600-R300	B600-R300
Operating conditions							
Operating temperature, °C		-20...+55	-25...+60	-20...+55	-25...+60	-25...+60	-25...+70
Storage temperature, °C		-55...+70	-50...+70	-55...+70	-50...+70	-50...+70	-55...+80
Compensation temperature, °C		-15...+55	-20...+60	-15...+55	-20...+60	-20...+60	-25...+70
Maximum height above sea level, m		3000					
Installation position	rated	In a vertical plane					
	permissible	±30°					
Installation		Per contactor or separately					

(1) 6 kV for auxiliary circuit.
(2) C600-R300 in case of automatic reset

Type	Weight, kg	Rated current range, A	Fuse, A		Three-phase motor power (1), kW			
			aM	gG	240 V	400 V	500 V	690 V
TF-M..-0,15	0,12	0,09...0,15	0,25	–	(2)	(2)	(2)	0,06
TF-M..-0,23	0,12	0,14...0,23	0,5	–	(2)	0,06	0,06	0,09
TF-M..-0,33	0,12	0,2...0,33	0,5	1	(2)	0,09	0,09	0,12
TF-M..-0,5	0,12	0,3...0,5	1	2	0,06	0,12	0,12	0,18
TF-M..-0,75	0,12	0,45...0,75	1	2	0,09–0,12	0,18	0,18	0,25–0,37
TF-M..-1,0	0,12	0,6...1	2	4	0,12	0,25	0,25–0,37	0,55
TF-M..-1,5	0,12	0,9...1,5	2	4	0,18	0,37	0,55	0,75
TF-M..-2,3	0,12	1,4...2,3	4	6	0,25–0,37	0,55–0,75	0,75	1,1–1,5
TF-M..-3,3	0,12	2...3,3	4	10	0,55	1,1	1,1–1,5	1,5–2,2
TF-M..-5,0	0,12	3...5	6	16	0,75	1,5	2,2	3
TF-M..-7,5	0,12	4,5...7,5	8	20	1,1–1,5	2,2-3	3–4	4–5,5
TF-M..-10	0,12	6...10	10	32	2,2	4	4–5,5	7,5
TF-M..-15	0,12	9...15	16	40	3	5,5	7,5	11
TF-U..38-0,16	0,16	0,1...0,16	0,25	–	(2)	(2)	(2)	0,06
TF-U..38-0,25	0,16	0,16...0,25	0,5	–	(2)	0,06	0,06–0,09	0,09–0,12
TF-U..38-0,4	0,16	0,25...0,4	0,5	1	0,06	0,09	0,12	0,18
TF-U..38-0,63	0,16	0,4...0,63	1	2	0,09	0,12–0,18	0,18	0,25
TF-U..38-1,0	0,16	0,63...1	2	4	0,12	0,25	0,25–0,37	0,37–0,55
TF-U..38-1,6	0,16	1...1,6	2	4	0,18–0,25	0,37–0,55	0,55–0,75	0,75
TF-U..38-2,5	0,16	1,6...2,5	4	6	0,37	0,75	1,1	1,1-1,5
TF-U..38-4,0	0,16	2,5...4	4	6	0,55–0,75	1,1–1,5	1,5–2,2	2,2–3
TF-U..38-6,5	0,16	4...6,5	8	16	1,1–1,5	2,2	3	4
TF-U..38-10	0,16	6,3...10	10	20	1,5–2,2	3–4	4–5,5	5,5–7,5
TF-U..38-14	0,16	9...14	16	32	3	5,5	5,5–7,5	11
TF-U..38-18	0,16	13...18	25	40	4	7,5	11	15
TF-U..38-23	0,16	17...23	25	50	5,5	11	11	18,5
TF-U..38-25	0,16	20...25	32	50	5,5	11	15	22
TF-U..38-32	0,16	24...32	40	63	7,5	15	18,5	30
TF-U..38-38	0,16	32...38	40	63	11	18,5	22	30
TF-U..94-33	0,365	20...33	40	63	5,5–7,5	11–15	15–18,5	18,5–22
TF-U..94-42	0,365	28...42	50	80	11	15–18,5	18,5–22	30–37
TF-U..94-50	0,365	35...50	50	100	11	22	30	37–45
TF-U..94-65	0,365	46...65	80	125	15–18,5	22–30	37–45	45–55
TF-U..94-82	0,365	60...82	100	200	18,5–22	37–45	45–55	75
TF-U..94-95	0,365	70...95	100	200	22	45	55	75-90
TF-U..150-82	0,365	60...82	100	200	18,5–22	37–45	45–55	75
TF-U..150-95	0,365	70...95	100	200	22	45	55	75–90
TF-U..150-110	0,365	90...110	125	200	30	55	75	90
TF-U..400-100	2,15	60...100	100	160	18,5–25	33–51	45–63	59–92
TF-U..400-125	2,15	75...125	125	200	22–37	40–63	55–80	75–110
TF-U..400-150	2,15	90...150	160	250	25–45	51–80	63–100	92–140
TF-U..400-200	2,15	120...200	200	315	37–59	75–100	92–140	129–184
TF-U..420-250	2,46	150...250	250	400	45–75	92–132	110–162	140–220
TF-U..420-300	2,46	180...300	315	500	55–92	100–162	129–198	180–280
TF-U..420-420	2,46	250...420	500	630	75–110	129–198	180–280	250–368
TF-E..38-8,0	0,195	0,4...2	4	6	0,09...0,37	0,12...0,75	0,18...0,75	0,25...1,1
TF-E..38-32	0,195	1,6...8	10	20	0,37...0,55	0,75...3	1,1...4	1,1...5,5
TF-E..38-42	0,195	6,4...32	40	63	1,5...7,5	3...15	6,8...28	5,5...30
TF-E..38-2,0	0,195	9...45	50	63	3...11	4...22	5,5...30	7,5...45

(1) The specified power values are valid for 4-pole motors: it is always recommended to check that the rated motor current is within the relay adjustment range.
(2) No standardized power values are available; select the relay according to the current consumption.

Current and time characteristics

TF-M..; TF-U..38; TF-U..94; TF-U..150

Three-phase mode

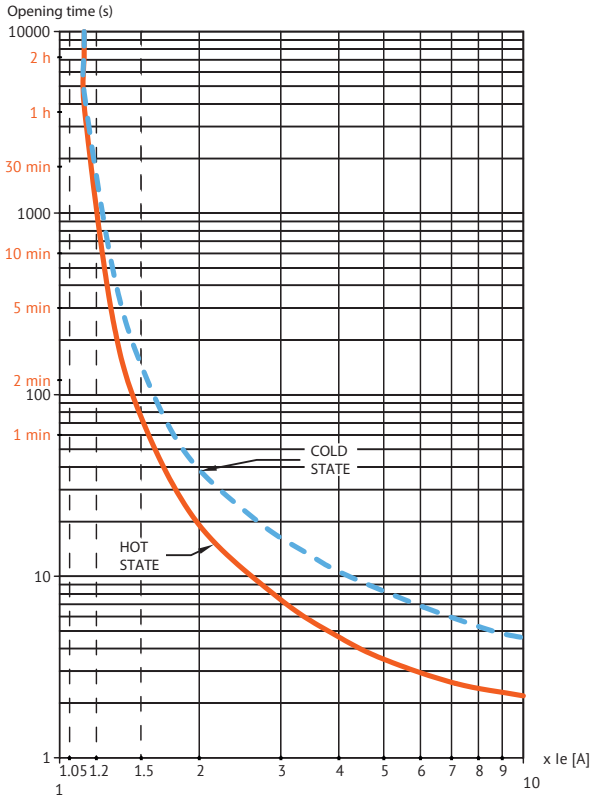

Two-phase mode (phase interruption)

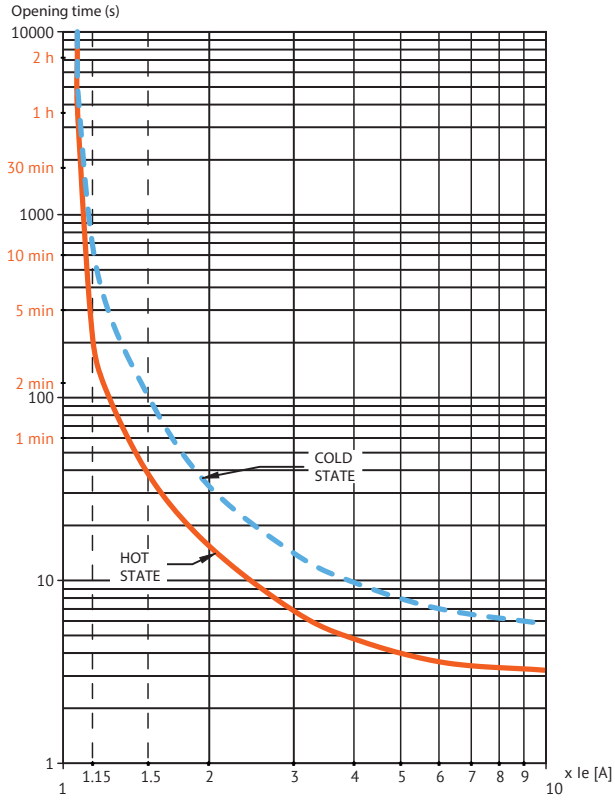

TF-U..400; TF-U..420

Three-phase mode

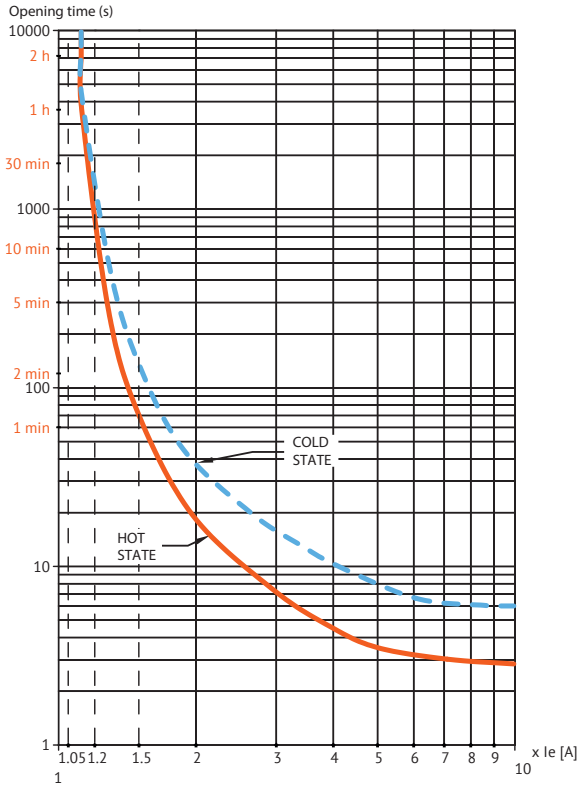

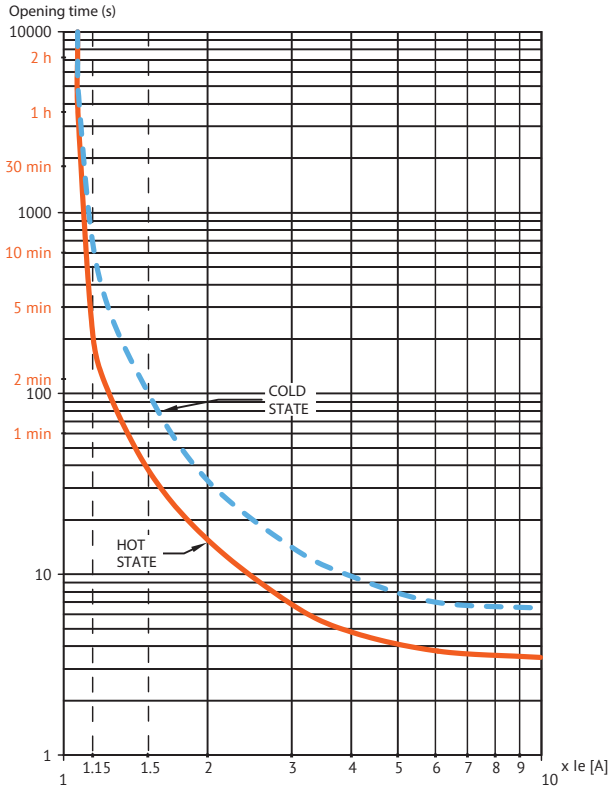

TF-E..38

Three-phase mode, trip class 5

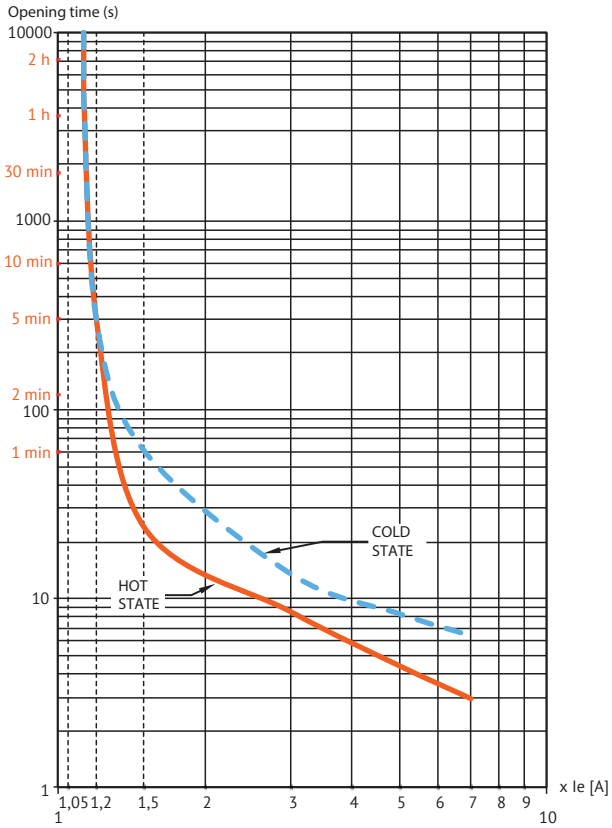

Three-phase mode, trip class 10

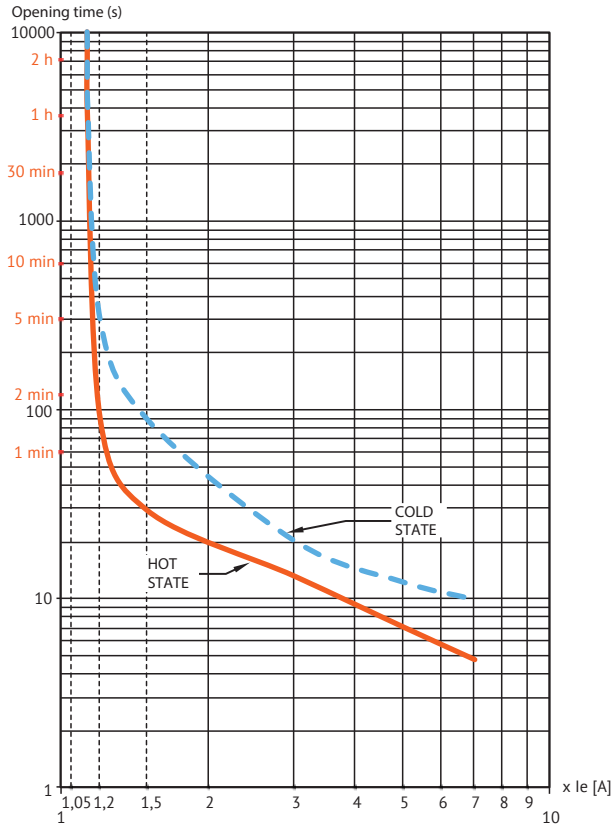

Three-phase mode, trip class 20

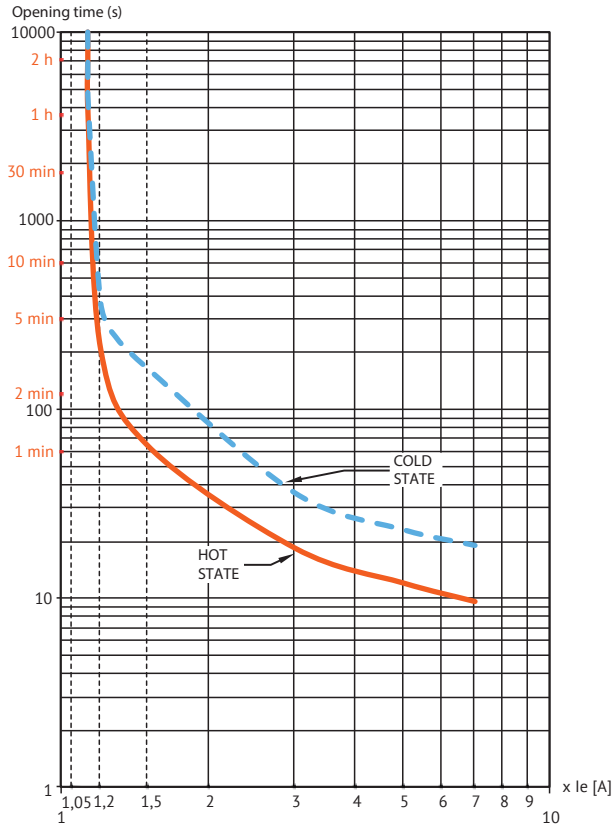

Three-phase mode, trip class 30

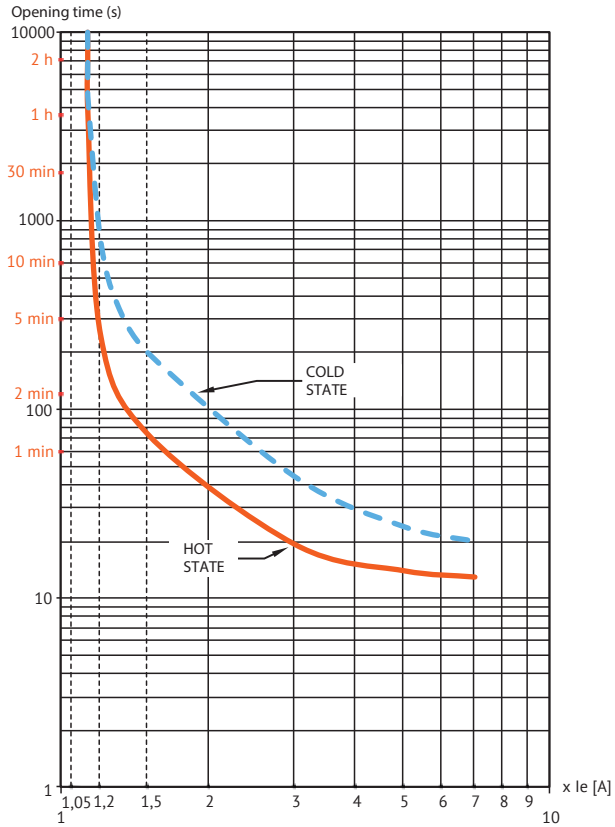

Note: for phase asymmetry >40%, the maximum trip time is 3 s.

Accessories

Appearance	Type	Rated voltage	Compatible devices	Product name	Code
	Mounting adapter		TF-...38	OptiStart TF-FX-3804	336155
			TF-...94, TF-...150	OptiStart TF-FX-270	336144
	Busbar kit		TF-...400 и AF-160...AF-230	OptiStart TF-FX-20035	336151
			TF-...420 и AF-160...AF-230	OptiStart TF-FX-42035	336156
	Sealing device		TF-M..., TF-...94, TF-...150	OptiStart TF-FX-233	336143
			TF-...38, TF-...400, TF-...420	OptiStart TF-FX-3801	336152
	Protective cover		TF-...400	OptiStart TF-FX-361	336145
	Protective cover		TF-...38 и F-09...F-25	OptiStart TF-FX-3802	336153
			TF-...38 и F-26...F-38	OptiStart TF-FX-3803	336154
	Remote reset module	24 В AC	TF-M..., TF-...94, TF-...150	OptiStart TF-FX-22824	336140
		48 В AC	TF-M..., TF-...94, TF-...150	OptiStart TF-FX-22848	336142
		110 В AC	TF-M..., TF-...94, TF-...150	OptiStart TF-FX-228110	336138
		220 В AC	TF-M..., TF-...94, TF-...150	OptiStart TF-FX-228220	336139
		380 В AC	TF-M..., TF-...94, TF-...150	OptiStart TF-FX-228380	336141

Available combination of optional accessories

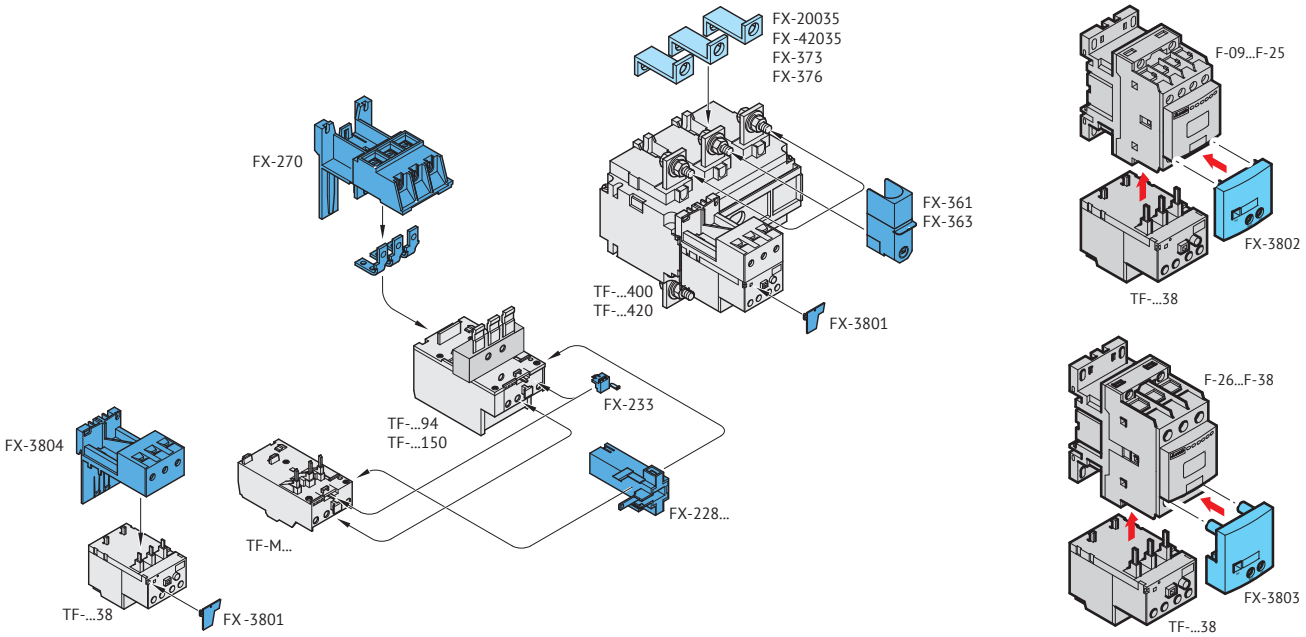

Overall dimensions (mm)

The overall dimensions of the overload relay assembled with contactors are presented in the summary table of the «Overall dimensions» section, «Contactors OptiStart K-F» chapter.

Overload relay accessories

OptiStart TF-FX-3804 mounting adapter with separately installed TF-U..38 relay

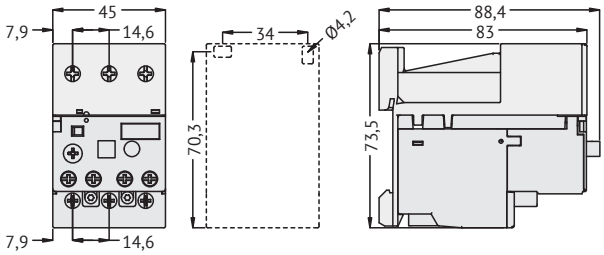

OptiStart TF-FX-270 mounting adapter with separately installed TF-U..94, TF-U..150 relay

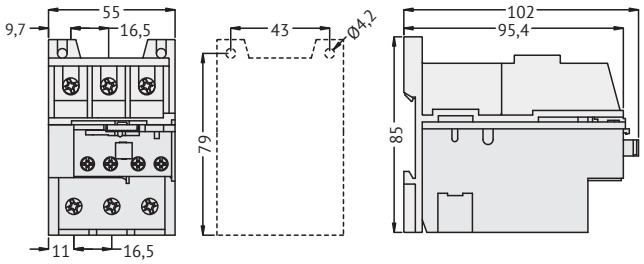

OptiStart TF-FX-3804 mounting adapter with separately installed TF-E..38 relay

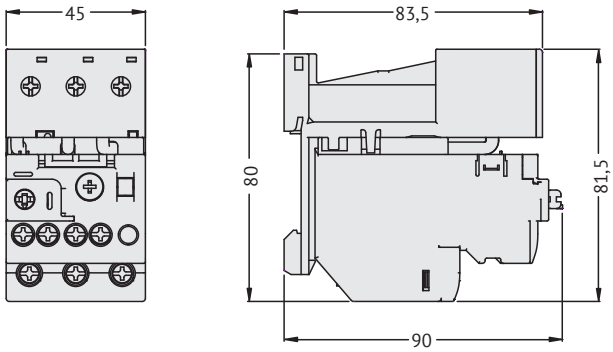

Remote reset module OptiStart TF-FX-228...

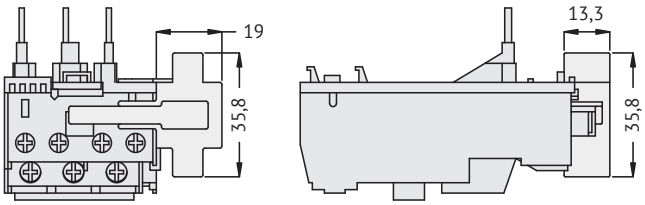

Overload relay TF-...400 with busbar kit FX-20035 or FX-373

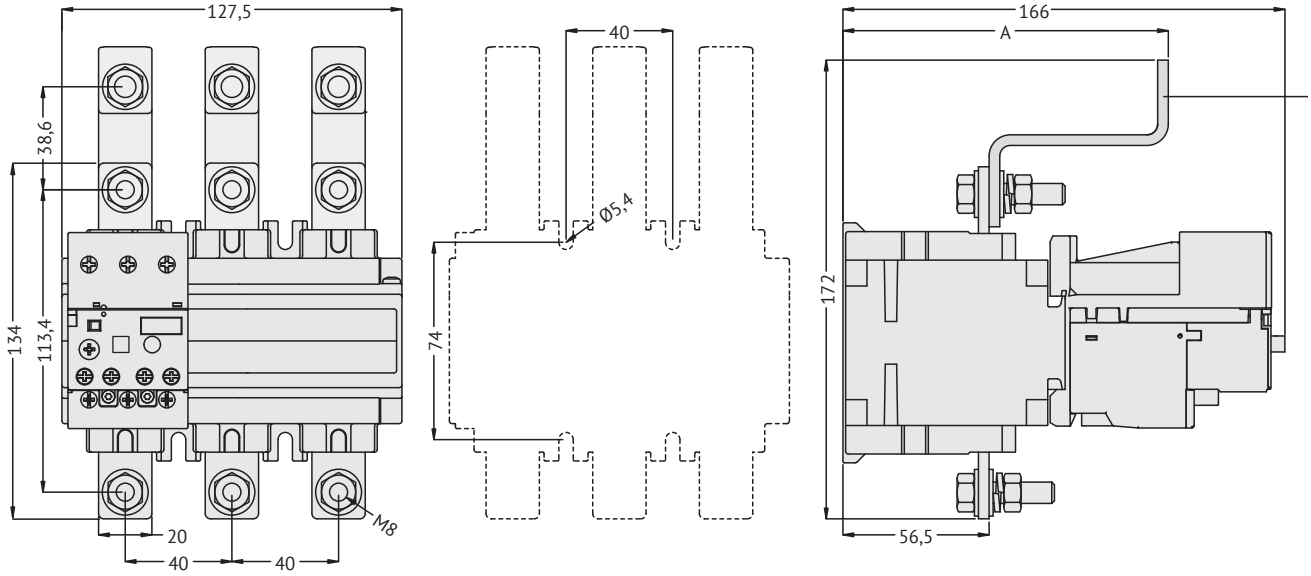

Overload relay TF-...420 with busbar kit FX-42035 or FX-376

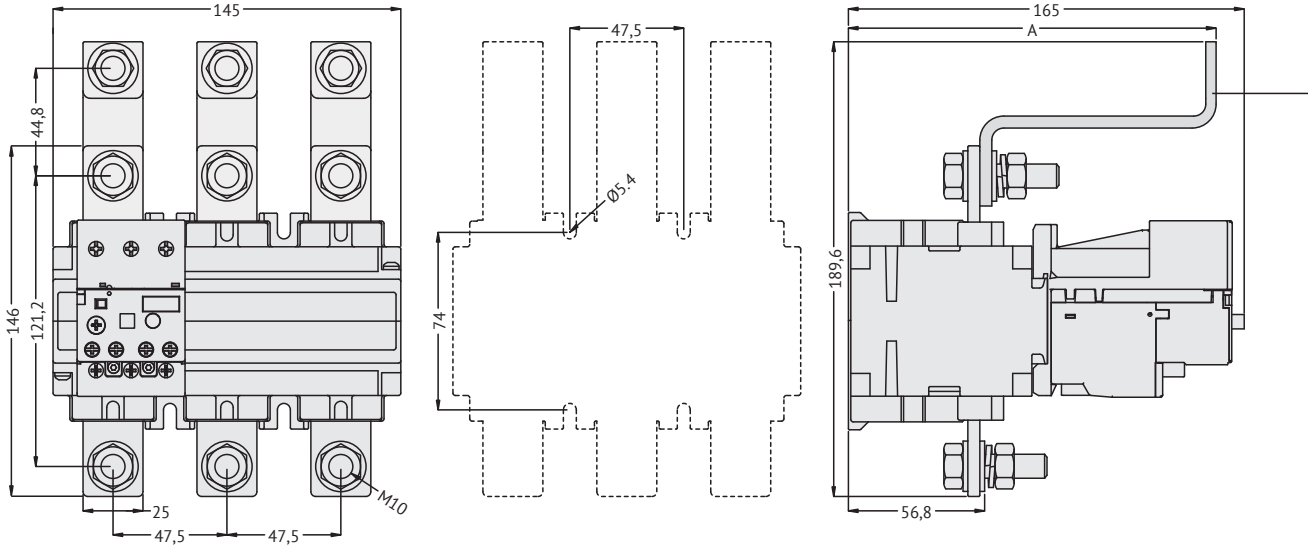

Electric schematics

Thermal and electronic relays for (A)F contactors and M mini-contactors

TF-MH...; TF-UH..94; TF-UH..150

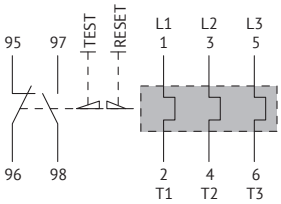

TF-MA...; TF-UA..94; TF-UA..150

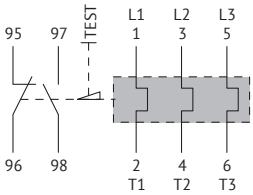

TF-...380

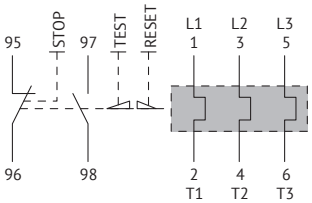

TF-U..400; TF-U..420

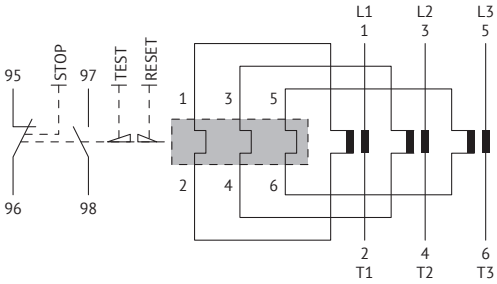

Remote reset module FX-228...

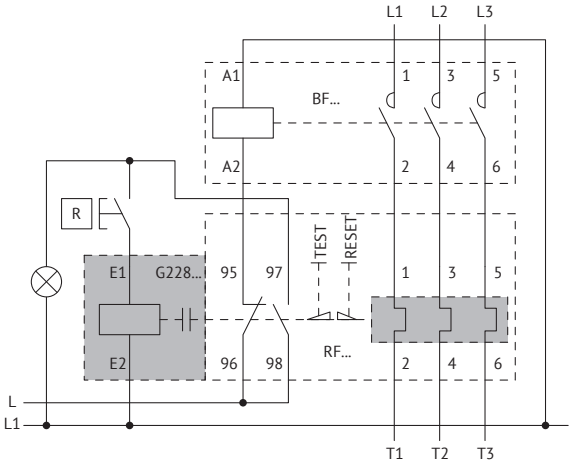

OptiStart E LC1E

↗ Electromagnetic contactors

Electromagnetic contactors series OptiStart E LC1E (hereinafter – «contactors») are intended for use as switching devices in electric drive control circuits, mainly in stationary installations for remote starting by direct connection to the mans, stopping and reversing three-phase asynchronous electric motors with a squirrel-cage rotor in electrical installations with voltage up to 660 V AC and frequency of 50 and 60 Hz. Series LC1E contactors can be used together with series LRE thermal relays to provide protection of controlled electric motors against long-term overload currents of unacceptable duration and against currents arising from interruption of one of the phases.

Designation

OptiStart E LC1E 18 10 F5 - 18A - 1NO - 110AC

1 2 3 4 5 6 7 8

1	Series	OptiStart E			
2	Device identification	LC1E — electromagnetic contactors			
3	Rated operating current AC-3 380 V, A	09, 12, 18, 25, 32, 40, 50, 65, 80, 95, 120, 160, 200, 250, 300, 400, 500, 630 A			
4	Number of auxiliary contacts	10 — one closing «1NO»	01 — one opening «1NC»	no designation — one normally open and one normally closed «1NO»+«1NC»	
5	Code designation of control circuit rated voltage with a frequency of 50 Hz NF3	B5 — 24 V	F5 — 110 V	M5 — 220 V	Q5 — 380 V
6	Rated operating current AC-3 380 V, A	09, 12, 18, 25, 32, 40, 50, 65, 80, 95, 120, 160, 200, 250, 300, 400, 500, 630 A			
7	Number of auxiliary contacts	10 — one closing «1NO»	01 — one opening «1NC»	no designation — one normally open and one normally closed «1NO»+«1NC»	
8	Rated voltage of control circuit, V, and current type	24, 110, 220, 380			
		AC — alternating current			

Series advantages

SELF-EXTINGUISHING PLASTIC HOUSING

Made of flame-retardant materials.

IMPLEMENTATION OF ANY ENGINEERING SOLUTIONS

A wide range of contactors for 9 to 630 A currents

RESISTANCE TO RUSSIAN CLIMATIC CONDITIONS

The operating temperature range is from minus 20 to plus 40°C.

AVAILABILITY OF BUILT-IN AUXILIARY CONTACTS

Contactors up to 32 A are equipped with one built-in auxiliary contact: 1NO or 1NC. Contactors 40-95 A are equipped with two auxiliary contacts: 1NO + 1NC.

WIDE RANGE OF ACCESSORIES

Convenient to connect and easy to use. This series includes all the most necessary accessories for contactors.

PROTECTION DEGREE IP-20

Protection of terminals against direct contact with current-carrying elements.

EFFECTIVE STOCK FORMATION

The most popular items are always available in stock.

Items

Appearance	Rated current Ie in AC-3 380 V, A	Suitable for AC-3 motors, 380-400 V, kW	Switching wear resistance, mln cycles	Auxiliary contacts		Product name	Coil voltage	Code	Weight, kg
				NO	NC				
three-pole non-reversing									
	9	4	1,2	–	1	Contactor OptiStart E LC1E0901B5-9A-1NC-24AC	24AC	330249	0,33
	9			–	1	Contactor OptiStart E LC1E0901F5-9A-1NC-110AC	110AC	330250	
	9			–	1	Contactor OptiStart E LC1E0901M5-9A-1NC-220AC	220AC	330251	
	9			–	1	Contactor OptiStart E LC1E0901Q5-9A-1NC-380AC	380AC	330252	
	9			1	–	Contactor OptiStart E LC1E0910B5-9A-1NO-24AC	24AC	330253	
	9			1	–	Contactor OptiStart E LC1E0910F5-9A-1NO-110AC	110AC	330254	
	9			1	–	Contactor OptiStart E LC1E0910M5-9A-1NO-220AC	220AC	330255	
	9			1	–	Contactor OptiStart E LC1E0910Q5-9A-1NO-380AC	380AC	330256	
	12	5,5		–	1	Contactor OptiStart E LC1E1201B5-12A-1NC-24AC	24AC	330257	
	12			–	1	Contactor OptiStart E LC1E1201F5-12A-1NC-110AC	110AC	330258	
	12			–	1	Contactor OptiStart E LC1E1201M5-12A-1NC-220AC	220AC	330259	
	12			–	1	Contactor OptiStart E LC1E1201Q5-12A-1NC-380AC	380AC	330260	
	12			1	–	Contactor OptiStart E LC1E1210B5-12A-1NO-24AC	24AC	330262	
	12			1	–	Contactor OptiStart E LC1E1210F5-12A-1NO-110AC	110AC	330263	
	12			1	–	Contactor OptiStart E LC1E1210M5-12A-1NO-220AC	220AC	330264	
	12			1	–	Contactor OptiStart E LC1E1210Q5-12A-1NO-380AC	380AC	330265	
	18	7,5		–	1	Contactor OptiStart E LC1E1801B5-18A-1NC-24AC	24AC	330267	0,37
	18			–	1	Contactor OptiStart E LC1E1801F5-18A-1NC-110AC	110AC	330268	
	18			–	1	Contactor OptiStart E LC1E1801M5-18A-1NC-220AC	220AC	330269	
	18			–	1	Contactor OptiStart E LC1E1801Q5-18A-1NC-380AC	380AC	330274	
	18			1	–	Contactor OptiStart E LC1E1810B5-18A-1NO-24AC	24AC	330270	
	18			1	–	Contactor OptiStart E LC1E1810F5-18A-1NO-110AC	110AC	330271	
	18			1	–	Contactor OptiStart E LC1E1810M5-18A-1NO-220AC	220AC	330272	
	18			1	–	Contactor OptiStart E LC1E1810Q5-18A-1NO-380AC	380AC	330273	

Appearance	Rated current Ie in AC-3 380 V, A	Suitable for AC-3 motors, 380-400 V, kW	Switching wear resistance, mln cycles	Auxiliary contacts		Product name	Coil voltage	Code	Weight, kg
				NO	NC				
	25	11	1,2	–	1	Contactor OptiStart E LC1E2501B5-25A-1NC-24AC	24AC	330275	0,53
	25			–	1	Contactor OptiStart E LC1E2501F5-25A-1NC-110AC	110AC	330276	
	25			–	1	Contactor OptiStart E LC1E2501M5-25A-1NC-220AC	220AC	330277	
	25			–	1	Contactor OptiStart E LC1E2501Q5-25A-1NC-380AC	380AC	330278	
	25			1	–	Contactor OptiStart E LC1E2510B5-25A-1NO-24AC	24AC	330280	
	25			1	–	Contactor OptiStart E LC1E2510F5-25A-1NO-110AC	110AC	330281	
	25			1	–	Contactor OptiStart E LC1E2510M5-25A-1NO-220AC	220AC	330282	
	25			1	–	Contactor OptiStart E LC1E2510Q5-25A-1NO-380AC	380AC	330283	
	32	15	1	–	1	Contactor OptiStart E LC1E3201B5-32A-1NC-24AC	24AC	330284	0,6
	32			–	1	Contactor OptiStart E LC1E3201F5-32A-1NC-110AC	110AC	330285	
	32			–	1	Contactor OptiStart E LC1E3201M5-32A-1NC-220AC	220AC	330286	
	32			–	1	Contactor OptiStart E LC1E3201Q5-32A-1NC-380AC	380AC	330287	
	32			1	–	Contactor OptiStart E LC1E3210B5-32A-1NO-24AC	24AC	330288	
	32			1	–	Contactor OptiStart E LC1E3210F5-32A-1NO-110AC	110AC	330289	
	32			1	–	Contactor OptiStart E LC1E3210M5-32A-1NO-220AC	220AC	330290	
	32			1	–	Contactor OptiStart E LC1E3210Q5-32A-1NO-380AC	380AC	330291	
	40	18,5	0,9	1	1	Contactor OptiStart E LC1E40B5-40A-1NO+1NC-24AC	24AC	330293	1,1
	40			1	1	Contactor OptiStart E LC1E40F5-40A-1NO+1NC-110AC	110AC	330294	
	40			1	1	Contactor OptiStart E LC1E40M5-40A-1NO+1NC-220AC	220AC	330295	
	40			1	1	Contactor OptiStart E LC1E40Q5-40A-1NO+1NC-380AC	380AC	330296	
	50	24		1	1	Contactor OptiStart E LC1E50B5-50A-1NO+1NC-24AC	24AC	330297	
	50			1	1	Contactor OptiStart E LC1E50F5-50A-1NO+1NC-110AC	110AC	330298	
	50			1	1	Contactor OptiStart E LC1E50M5-50A-1NO+1NC-220AC	220AC	330299	
	50			1	1	Contactor OptiStart E LC1E50Q5-50A-1NO+1NC-380AC	380AC	330300	
	65	28		1	1	Contactor OptiStart E LC1E65B5-65A-1NO+1NC-24AC	24AC	330301	
	65			1	1	Contactor OptiStart E LC1E65F5-65A-1NO+1NC-110AC	110AC	330302	
	65			1	1	Contactor OptiStart E LC1E65M5-65A-1NO+1NC-220AC	220AC	330303	
	65			1	1	Contactor OptiStart E LC1E65Q5-65A-1NO+1NC-380AC	380AC	330304	
	80	37		1	1	Contactor OptiStart E LC1E80B5-80A-1NO+1NC-24AC	24AC	330305	1,4
	80			1	1	Contactor OptiStart E LC1E80F5-80A-1NO+1NC-110AC	110AC	330306	
	80			1	1	Contactor OptiStart E LC1E80M5-80A-1NO+1NC-220AC	220AC	330307	
	80			1	1	Contactor OptiStart E LC1E80Q5-80A-1NO+1NC-380AC	380AC	330308	
	95	44		1	1	Contactor OptiStart E LC1E95B5-95A-1NO+1NC-24AC	24AC	330309	
	95			1	1	Contactor OptiStart E LC1E95F5-95A-1NO+1NC-110AC	110AC	330310	
	95			1	1	Contactor OptiStart E LC1E95M5-95A-1NO+1NC-220AC	220AC	330311	
	95			1	1	Contactor OptiStart E LC1E95Q5-95A-1NO+1NC-380AC	380AC	330312	
	120	55	0,8	1	1	Contactor OptiStart E LC1E120M5-120A-1NO+1NC-220AC	220AC	330261	4,6
	160	75		1	1	Contactor OptiStart E LC1E160M5-160A-1NO+1NC-220AC	220AC	330266	4,7
	250	132	0,5	1	1	Contactor OptiStart E LC1E250M5-250A-1NO+1NC-220AC	220AC	330279	6,6
	400	200		1	1	Contactor OptiStart E LC1E400M7-400A-1NO+1NC-220AC	220AC	330292	7,2

Technical specification

Contactor type		LC1E0910	LC1E0901	LC1E1210	LC1E1201	LC1E1810	LC1E1801	LC1E2510	LC1E2501	LC1E3210	LC1E3201
Rated insulation voltage Ui, V		690									
Utilization category AC-2 and AC-3 — Start-up, shut-down of three-phase motors											
Rated operating current in utilization category Ie, A	AC-3 ≤ 400 V	9		12		18		25		32	
	AC-3 660/690 V	6,6		8,9		12		18		21	
	AC-4 ≤ 400 V	3,5		5		7,7		8,5		12	
	AC-4 660/690 V	1,5		2		3,8		4,4		7,5	
Rated power of controlled motor, kW, in utilization category AC-3	220/230 V	2,2		3		4		5,5		7,5	
	380/400 V	4		5,5		7,5		11		15	
	660/690 V	5,5		7,5		10		15		18,5	
Auxiliary contacts											
«1NO» — closing contact		1NO	–	1NO	–	1NO	–	1NO	–	1NO	–
«1NC» — opening contact		–	1NC	–	1NC	–	1NC	–	1NC	–	1NC
Switching and mechanical wear resistance, mln cycles											
Switching wear resistance	AC-1	0,3									
	AC-3	1,2								1	0,9
	AC-4	0,2									
Mechanical wear resistance		10								8	
Short-circuit protection											
Coordination type 1: welding of contacts, safe for personnel	gG, A	20		25		35		40		63	
Frequency of operations, q-ty per hour											
No load		3600	3600	3600	3600	3600	3600	3600	3600	3600	3600
In utilization category AC-3		1200	1200	1200	1200	1200	1200	1200	1200	600	600
Conductor connection											
Flexible cable with lug, mm²	1 conductor	1...4	1...4	1...4	1...4	1...4	1...4	1...6	1...6	1...10	1...10
	2 conductor	1...2,5	1...2,5	1...2,5	1...2,5			1...4	1...4	2,5...6	2,5...6
Flexible cable without lug, mm²	1 conductor	1...4	1...4	1...4	1...4	1,5...6	1,5...6	1,5...10	1,5...10	2,5...6	2,5...6
	2 conductor					1,5...6	1,5...6	1,5...6	1,5...6		
Rigid cable, mm²	1 conductor	1...4	1...4	1...4	1...4	1,5...6	1,5...6	1,5...6	1,5...6	1,5...10	1,5...10
	2 conductor									2,5...10	2,5...10
Stripped insulation length, mm²		8				9		12			
Lug cable, mm²		–									
Bus	2 pcs. x										
Bolt diameter											
Tightening torque, N·m		1,2									
AC control circuit coil specifications											
Tripping range	Tripping	0,85...1,1Uc									
	Release	0,2...0,6Uc									
Power consumption, VA	Tripping cosφ 0.75	70						110			
	Retention cosφ 0.3	8						11			
Trip time	Closing	12..25						20..25			
	Opening	5...20						20..35			
Power dissipation, W		3						3,5			
Contactor weight, max, kg		0,33				0,37		0,53		0,6	

Contactor type		LC1E40	LC1E50	LC1E65	LC1E80	LC1E95	LC1E120	LC1E160	LC1E200	LC1E250	LC1E300	LC1E400	LC1E500	LC1E630
Rated insulation voltage Ui, V		690												
Utilization category AC-2 and AC-3 — Start-up, shut-down of three-phase motors														
Rated operating current in utilization category Ie, A	AC-3 ≤ 400 V	40	50	65	80	95	120	160	200	250	300	400	500	630
	AC-3 660/690 V	25	32	42	49	49	87,5	112	142	160	213	303	335	462
	AC-4 ≤ 400 V	18,5	24	28	37	44	53	64	76	88	120	138	147	188
	AC-4 660/690 V	9	12	14	17,3	21,3	30,5	37	45	50,8	69	79,7	84,9	108
Rated power of controlled motor, kW, in utilization category AC-3	220/230 V	11	15	18,5	22	25	37	45	55	75	90	110	147	185
	380/400 V	18,5	22	30	37	45	55	75	90	132	185	200	250	335
	660/690 V	30	33	37	45	45	75	100	110	132	200	280	335	450
Auxiliary contacts														
«1NO» — closing contact		1NO	1NO	1NO	1NO	1NO	1NO	1NO	1NO	1NO	1NO	1NO	1NO	1NO
«1NC» — opening contact		1NC	1NC	1NC	1NC	1NC	1NC	1NC	1NC	1NC	1NC	1NC	1NC	1NC
Switching and mechanical wear resistance, mln cycles														
Switching wear resistance	AC-1	0,3					0,2							
	AC-3	0,9					0,8		0,5					
	AC-4	0,15			0,1		0,1							
Mechanical wear resistance		8			6			3						
Short-circuit protection														
Coordination type 1: welding of contacts, safe for personnel	gG, A	80		125	160		250	315			500	630	800	800
Frequency of operations, q-ty per hour														
No load		3600	3600	3600	3600	3600	2400	2400	2400	2400	2400	2400	2400	2400
In utilization category AC-3		600	600	600	600	600	600	600	600	600	600	600	600	600
Conductor connection														
Flexible cable with lug, mm²	1 conductor	2,5...25	2,5...25	2,5...25	4...50	4...50	–							
	2 conductor	2,5...10	2,5...10	2,5...10	4...16	4...16								
Flexible cable without lug, mm²	1 conductor	2,5...25	2,5...25	2,5...25	4...50	4...50								
	2 conductor	2,5...16	2,5...16	2,5...16	4...25	4...25								
Rigid cable, mm²	1 conductor	2,5...25	2,5...25	2,5...25	4...50	4...50								
	2 conductor	2,5...16	2,5...16	2,5...16	4...25	4...25								
Stripped insulation length, mm²		15			17									
Lug cable, mm²		–					1x95	1x150		1x185	1x240	2x150	2x185	2x240
Bus	2 pcs. x						20x3	25x3		32x4	30x5	30x4	40x5	60x5
Bolt diameter							M8		M10					M12
Tightening torque, N·m		3,5			4		18		35					58
AC control circuit coil specifications														
Tripping range	Tripping	0,85...1,1Uc					0,85...1,1Uc							
	Release	0,2...0,6Uc					0,2...0,55Uc							
Power consumption, VA	Tripping cosφ 0,75	200					550	805		650		1075	1000	1650
	Retention cosφ 0,3	20					55	64		15		22	24	27
Trip time	Closing	20..25			8..15		23..35	20..35		40...65	40..65	40..75		40-80
	Opening	20..25			8...20		5...15	7...15		100...170				100-200
Power dissipation, W		10					12...16	18..24		8		14	18	20
Contactor weight, max, kg		1,1			1,4		4,6	4,7	4,9	6,6	6,8	7,2	9,7	18

Configuration

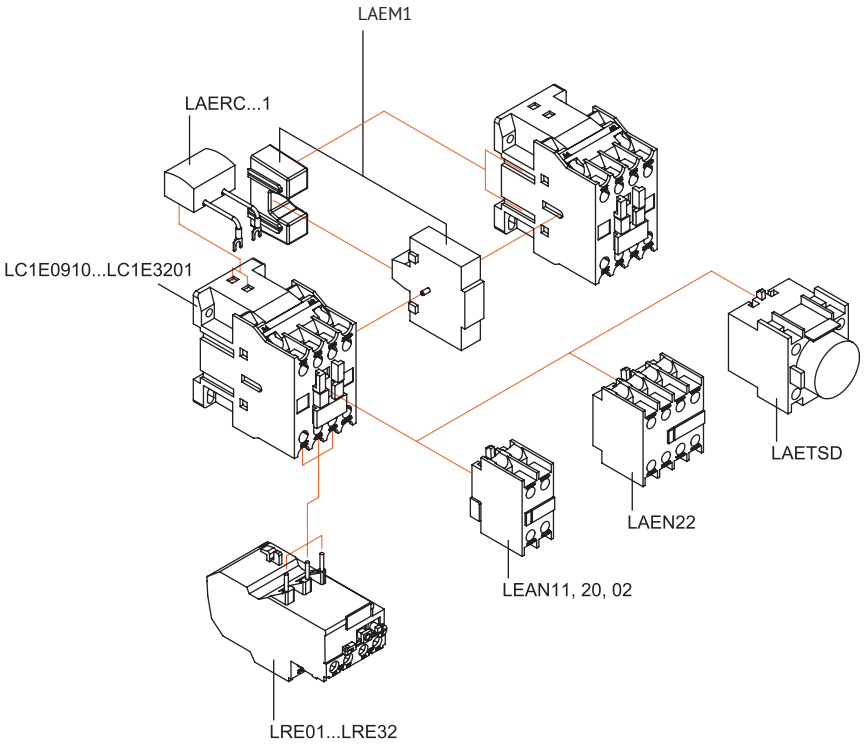

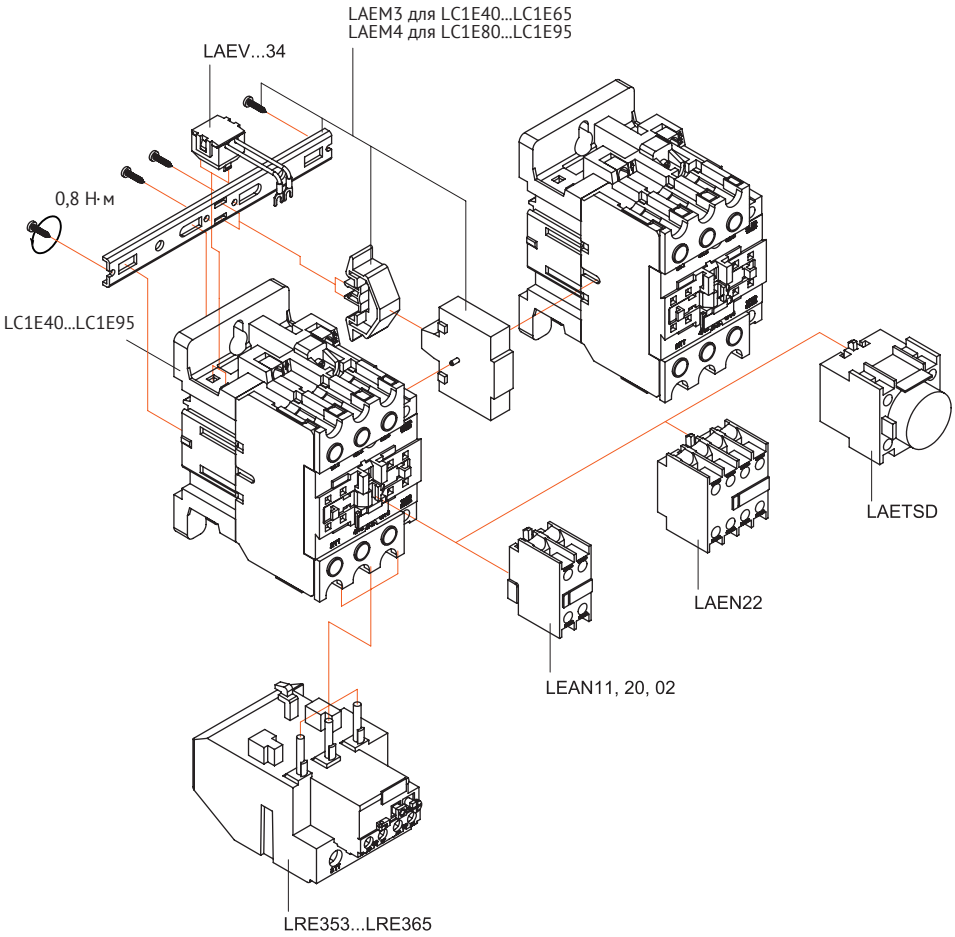

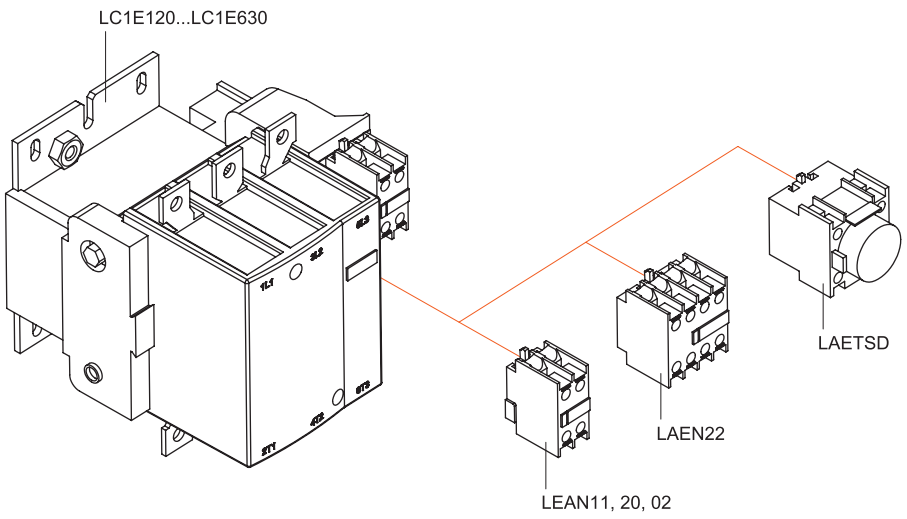

Overall dimensions (mm)

Contactors LC1E 9-32 A

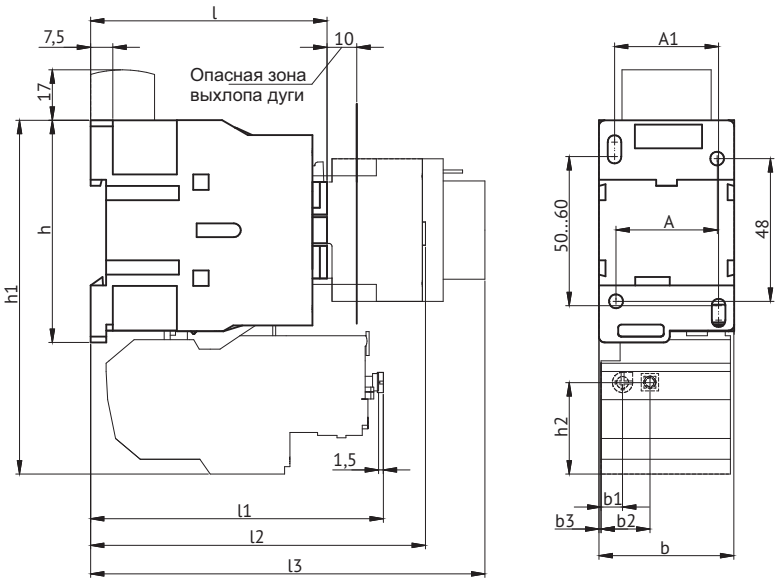

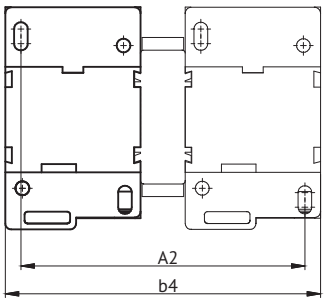

Contactor type	A	A1	A2	b	b1	b2	b3	b4	h	h1	h2	l	l1	l2	l3	Panel mounting screws
LC1E09	34	35	96	46	7,6	16,8	0,5	107	75	120	31	81	98,5	114	136	M4 2 pcs.
LC1E12																
LC1E18							0					86	99	119	140	
LC1E25	40	40	112	57			10,5	129	84	129		94	108,5	127	147	
LC1E32							8,5					100	110,5	132	154	

Contactors LC1E 40-95 A

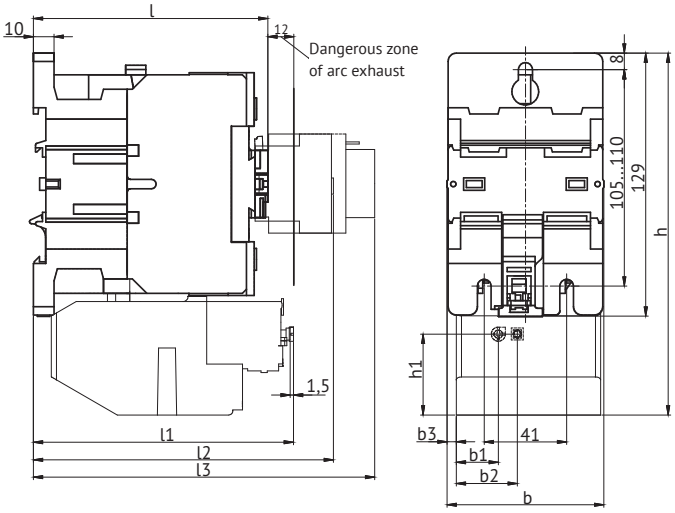

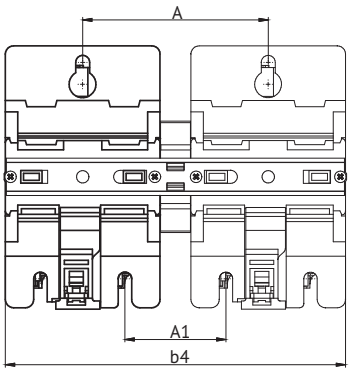

Contactor type	A	A1	b	b1	b2	b3	b4	h	h1	l	l1	l2	l3	Panel mounting screws
LC1E40	91	50	77	20,4	29,6	5	167	176	39,2	115	126	147	169	M6 3 pcs.
LC1E50														
LC1E65														
LC1E80	97	56	86			8,5	182	180		123	131,5	155	177	
LC1E95														

Contactors LC1E 120-300 A

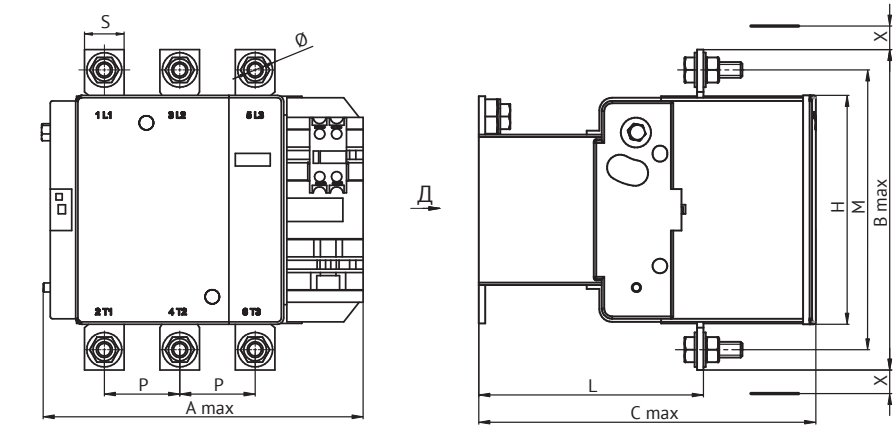

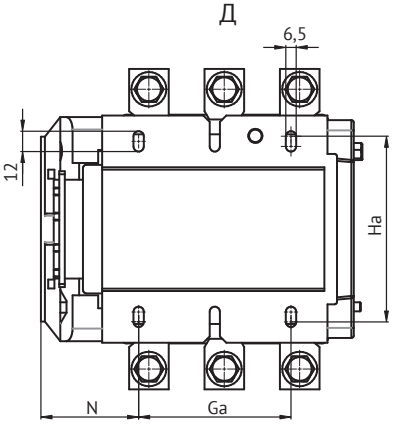

Contactor type	A	A1	A2	b	b1	b2	b3	D	h	h1	h2	l	l1	P	Q	Q1	S	Panel mounting screws
LC1E120	150	80	106	167	131	16	45	9	137	171	124	171	107	40	29	58	20	M6 4 pcs.
LC1E160	154		111	171	130		44	11		174	127	181	113,5		31	60		
LC1E200	172									197				48	22	53	25	
LC1E250	179	96	142	203	147	22	39		145	205	147	213	142		39	68		
LC1E300	182		155	213		20	38			207	158	219	146		43	74		

Contactors LC1E 400-500 A

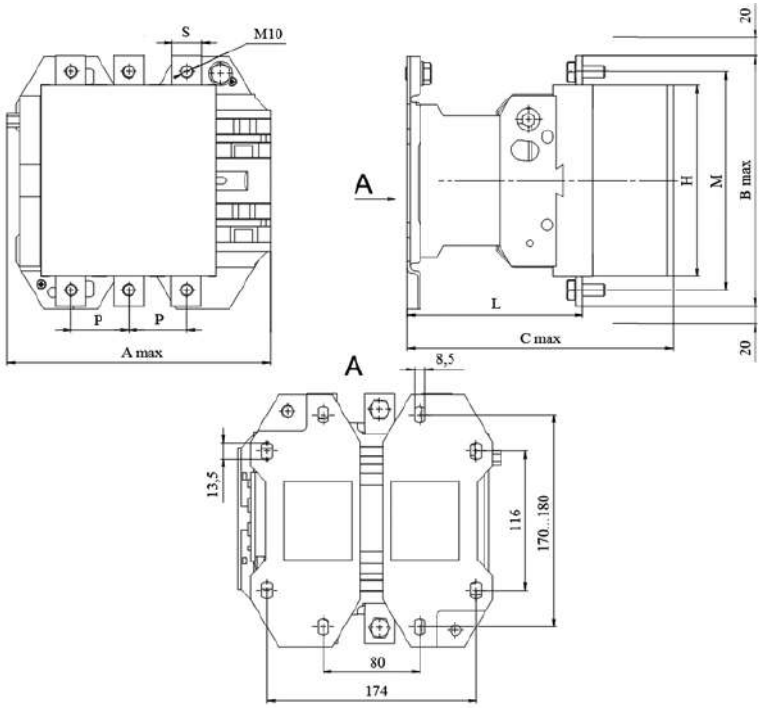

Contactor type	A	b	b1	b2	h	h1	l	l1	P	Q	Q1	S	Panel mounting screws
LC1E400	181	213	151	19,5	206	158	220	145	48	43	74	25	M8 4 pcs.
LC1E500	208	233	169	39,5	238	172	233	146	55	46	77	30	

Contactors LC1E 630, 800 A

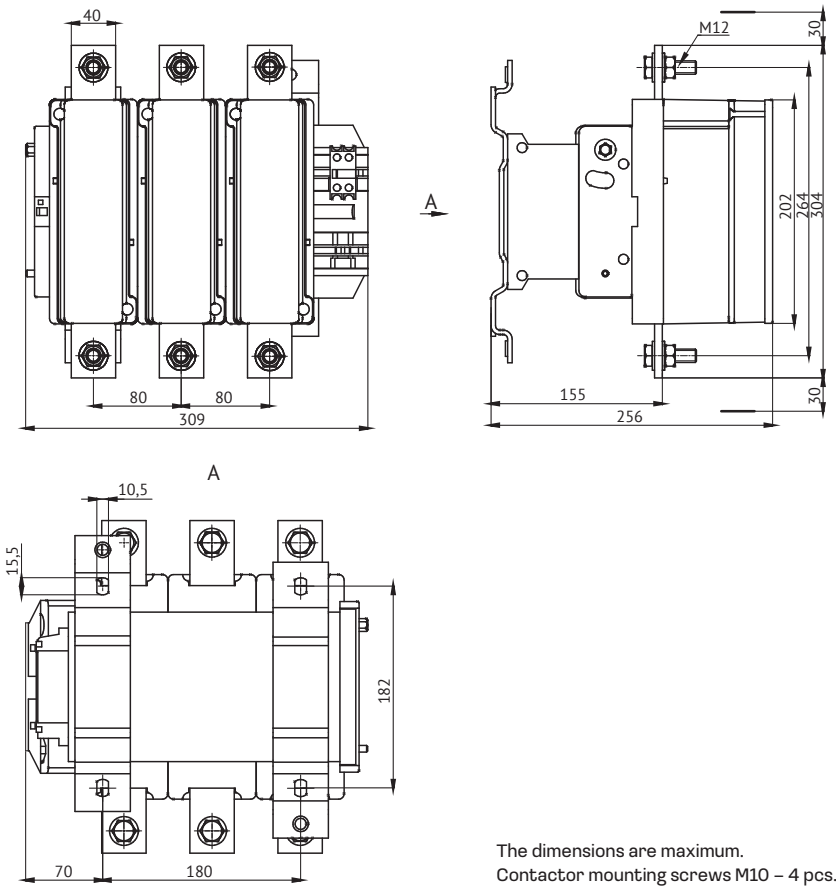

The dimensions are maximum.
Contactor mounting screws M10 – 4 pcs.

Accessories

Designation

OptiStart E LAEN 2 2

(1) (2) (3) (4)

1	Series	OptiStart E
2	Product type name	LAEN — Optional contact unit
3	Number of closing contacts (NO)	0; 1; 2
4	Number of opening contacts (NC)	0; 1; 2

OptiStart E LAET S D

(1) (2) (3) (4)

1	Series	OptiStart E
2	Product type name	LAET — Optional contact unit with time delay
3	Time delay upon activation	S
4	Time delay range: 0.1-30 s	D

Items

Appearance	Contact unit type	Contacts		Rated operating current in utilization category Ie, A					Code
		NO	NC	DC-13			AC-15		
				110 V	220 V	440 V	400 V	690 V	
	LAEN11	1	1	0,34	0,15	0,06	0,74	0,28	333076
	LAEN20	2	-						333077
	LAEN02	-	2						333078
	LAEN22	2	2						333079
	LAETSD	1	1						333080

Contactor coils OptiStart E LC1E

Appearance	For contactors	Product name	Coil voltage, V	Code
	LC1E9...18	OptiStart E LAEX1B5	24	333090
		OptiStart E LAEX1F5-110B	110	333091
		OptiStart E LAEX1M5	220	333092
		OptiStart E LAEX1Q5-380B	380	333093
	LC1E25...32	OptiStart E LAEX2B5	24	333094
		OptiStart E LAEX2F5	110	333095
		OptiStart E LAEX2M5	220	333096
		OptiStart E LAEX2Q5	380	333097
	LC1E40...65	OptiStart ELAEX3F5	110	333099
		OptiStart ELAEX3M5	220	333100
		OptiStart ELAEX3Q5	380	333101
	LC1E80...95	OptiStart E LAEX4B5	24	333102
		OptiStart E LAEX4F5	110	333103
		OptiStart E LAEX4M5	220	333104
		OptiStart E LAEX4Q5	380	333105
	LC1E120	OptiStart E LAEX5M5	220	333106
	LC1E160...200	OptiStart E LAEX51M5	220	333107
	LC1E250...300	OptiStart E LAEX6M5	220	333108
	LC1E500	OptiStart E LAEX8M5	220	333110
	LC1E630	OptiStart E LAEX9M5	220	333111

Mechanical interlock OptiStart E LAEM

Appearance	Contactor types	Installation	Product name	Code
	LC1E9...32	Horizontal	LAEM1	333087
	LC1E40...65	Horizontal	LAEM3	333088
	LC1E80...95	Horizontal	LAEM4	333089

OptiStart E switching overvoltage limitation module

Appearance	For contactor	Voltage range, V	Hardware components	Product name	Code
	LC1E9...32	24-48	R-C	OptiStart E LAERCE1	333081
	LC1E9...32	100-250	R-C	OptiStart E LAERCU1	333082
	LC1E9...32	380-400	R-C	OptiStart E LAERCN1	333083
	LC1E40...95	24-48	Variable resistor	OptiStart E LAEVE34	333084
	LC1E40...95	100-250	Variable resistor	OptiStart E LAEVU34	333085
	LC1E40...95	380-400	Variable resistor	OptiStart E LAEVN34	333086

Technical specification

Type		LAEN11	LAEN20	LAEN02	LAEN22	LAETSD
Rated insulation voltage Ui, V		690	690	690	690	690
Operation frequency, q-ty per hour		3600	3600	3600	3600	3600
Switching wear resistance, mln cycles		1	1	1	1	1
Mechanical wear resistance, mln cycles		10	10	10	10	5
Utilization category AC-15						
Rated operating current	400 V	0,74	0,74	0,74	0,74	0,74
	690 V	0,28	0,28	0,28	0,28	0,28
Short-circuit protection, A						
Short-circuit current 1 kA, contact welding is unacceptable	gG	10	10	10	10	10
Number of contacts						
Closing (NO)		1	2	0	2	1
Opening (NC)		1	0	2	2	1
Conductor connection						
Flexible cable with lug, mm²	2 conductors	1–2,5	1–2,5	1–2,5	1–2,5	1–2,5
Flexible cable without lug, mm²		1–2,5	1–2,5	1–2,5	1–2,5	1–2,5
Rigid cable, mm²		1–2,5	1–2,5	1–2,5	1–2,5	1–2,5
Weight, max, kg		0,3	0,3	0,3	0,6	0,8

Electric schematics

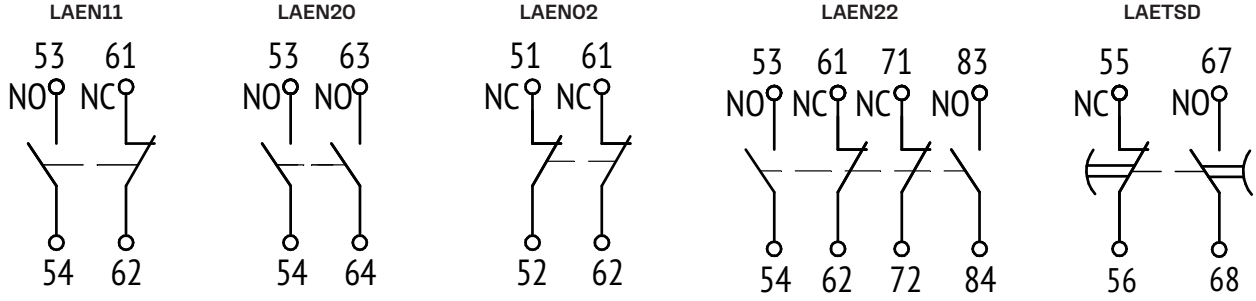

Overall dimensions (mm)

Optional contact units
LAEN11, LAEN02, LAEN20

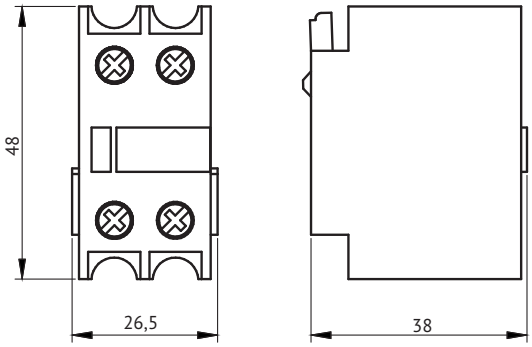

LAEN22

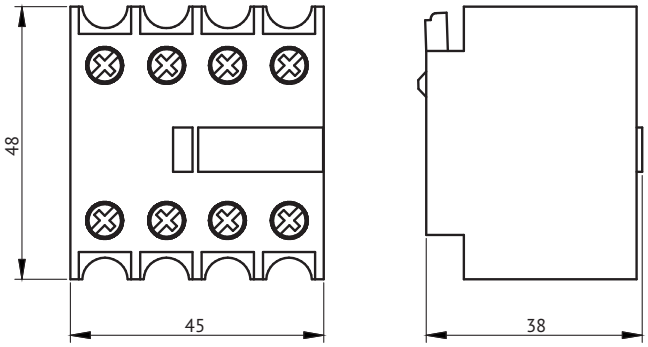

Contact units with time delay
LAETSD

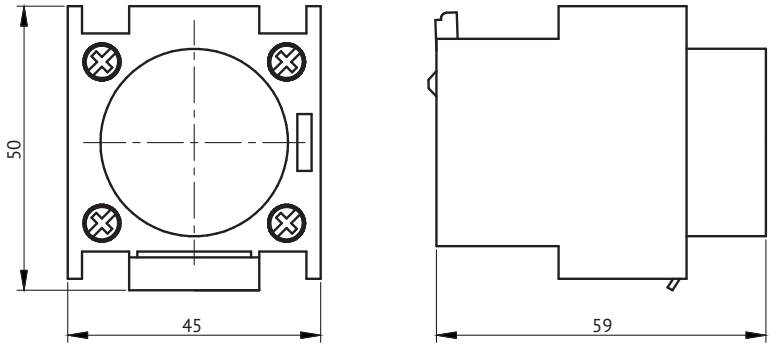

OptiStart E LRE

↗ Thermal relays

Relays are designed to protect three-phase asynchronous electric motors with a squirrel-cage rotor from overcurrent of unacceptable duration, including those occurring when one of the phases fails. The relays are used as components in control circuits of electric drives in circuits up to 690 V AC and 50/60 Hz. This series is intended for use together with series OptiStart E LC1E contactors as per TU 3420-091-05758109-2016. They are used in control systems of lifting gear (elevators, cranes, etc.), fans, pumps, thermal curtains, furnaces, machines, lighting systems, in automatic traNCer switch (ATS) systems. Thermal relays OptiStart E LRE are Russian devices replacing those manufactured by Western vendors withdrawn from the market.

Selection table

Relay type	Relay current set-point range, A	Electric motor power, kW, at a voltage, V, 50/60 Hz			Fuse Coordination type 1		Compatibility with contactor									
		220/230	380/400	660/690	aM (A)	gG (A)	LC1E09	LC1E12	LC1E18	LC1E25	LC1E32	LC1E40	LC1E50	LC1E65	LC1E80	LC1E95
LRE01	0,1–0,16	–	–	–	0,25	2	•	•	•	•	•	–	–	–	–	–
LRE02	0,16–0,25	–	0,06	–	0,5		•	•	•	•	•					
LRE03	0,25–0,4	–	0,09	–	1		•	•	•	•	•					
LRE04	0,4–0,63	–	0,18	0,25			•	•	•	•	•					
LRE05	0,63–1	–	0,25	0,55	2	4	•	•	•	•	•					
LRE06	1–1,6	–	0,55	0,75			•	•	•	•	•					
LRE07	1,6–2,5	0,37	0,75	1,5	4	6	•	•	•	•	•					
LRE08	2,5–4	0,75	1,5	3	6	10	•	•	•	•	•					
LRE10	4,0–6	1,1	2,2	4	8	16	•	•	•	•	•					
LRE12	5,5–8	1,8	3	5,5	12	20	•	•	•	•	•					
LRE14	7–10	2,2	4	7,5			•	•	•	•	•					
LRE16	9–13	3	5,5	10	16	25	–	•	•	•	•					
LRE21	12–18	4	7,5	15	20	35		–	•	•	•					
LRE22	17–25	5,5	11	18,5	25	50			–	•	•					
LRE32	23–32	7,5	15	22	40	63				–	•					
LRE353	23–32	7,5	15	22							–	•	•	•	•	•
LRE355	30–40	11	18,5	30		100						•	•	•	•	•
LRE357	37–50	11	22	45	63				–	–		–	•	•	•	•
LRE359	48–65	18,5	30	55										•	•	•
LRE361	55–70	18,5	37	55	80	125							–		•	•
LRE363	63–80	22	37	55											•	•
LRE365	80–93	25	45	75		160									–	•

• Jointly
– Not jointly

Designation

OptiStart E LRE 07 - 32A - (4-6A)

1 2 3 4 5

1	Series	OptiStart E	
2	Product type name	LRE — Thermal relay	
3	Designation of current setpoint	01, 02, 03, 04, 05, 06, 07, 08, 10, 12, 14, 16, 21, 22, 32	353, 355, 357, 359, 361, 363, 365
4	Relay rated current, A	32	93
5	Motor current setpoint range, A	0,1 to 32	23 to 93

Series advantages

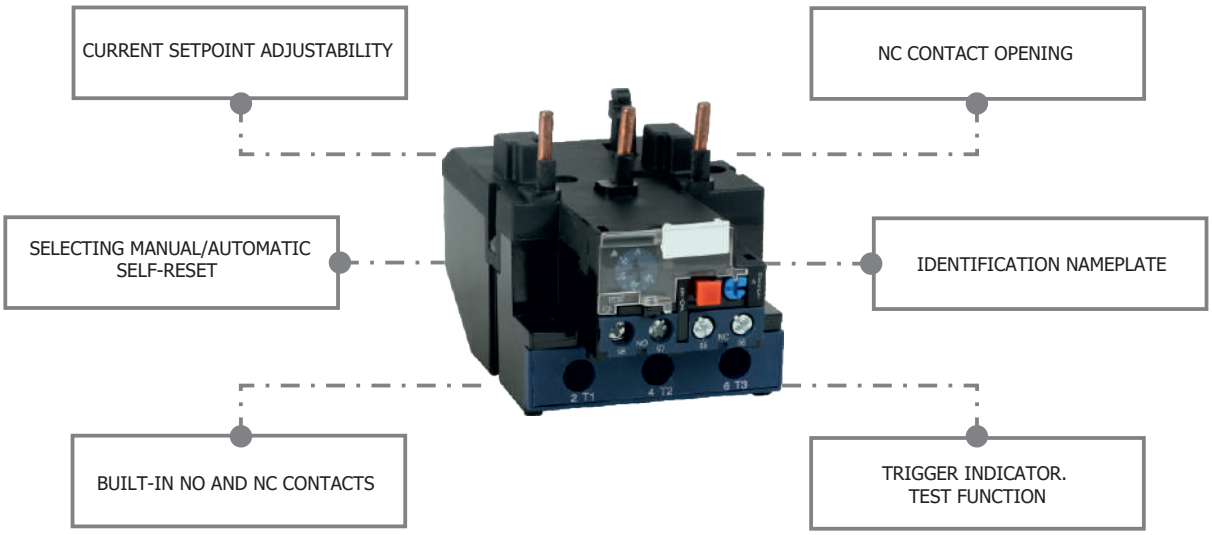

Items

Appearance	Product type	Thermal release current setpoint range, A	Product name	Code	Weight, kg
	OptiStart E LRE01	0,1–0,16	Thermal relay OptiStart E LRE01-32A-(0,1-0,16A)	330313	0,17
	OptiStart E LRE02	0,16–0,32	Thermal relay OptiStart E LRE02-32A-(0,16-0,32A)	330314	
	OptiStart E LRE03	0,25–0,4	Thermal relay OptiStart E LRE03-32A-(0,25-0,4A)	330315	
	OptiStart E LRE04	0,4–0,63	Thermal relay OptiStart E LRE04-32A-(0,4-0,63A)	330316	
	OptiStart E LRE05	0,63–1	Thermal relay OptiStart E LRE05-32A-(0,63-1A)	330317	
	OptiStart E LRE06	1–1,6	Thermal relay OptiStart E LRE06-32A-(1-1,6A)	330318	
	OptiStart E LRE07	1,6–2,5	Thermal relay OptiStart E LRE07-32A-(1,6-2,5A)	330319	
	OptiStart E LRE08	2,5–4	Thermal relay OptiStart E LRE08-32A-(2,5-4A)	330320	
	OptiStart E LRE10	4–6	Thermal relay OptiStart E LRE10-32A-(4-6A)	330321	
	OptiStart E LRE12	5,5–8	Thermal relay OptiStart E LRE12-32A-(5,5-8A)	330322	
	OptiStart E LRE14	7–10	Thermal relay OptiStart E LRE14-32A-(7-10A)	330323	
	OptiStart E LRE16	9–13	Thermal relay OptiStart E LRE16-32A-(9-13A)	330324	
	OptiStart E LRE21	12–18	Thermal relay OptiStart E LRE21-32A-(12-18A)	330325	
	OptiStart E LRE22	17–25	Thermal relay OptiStart E LRE22-32A-(17-25A)	330326	
	OptiStart E LRE32	23–32	Thermal relay OptiStart E LRE32-32A-(23-32A)	330327	
	OptiStart E LRE353	23–32	Thermal relay OptiStart E LRE353-93A-(23-32A)	330328	0,25
	OptiStart E LRE355	30–40	Thermal relay OptiStart E LRE355-93A-(30-40A)	330329	
	OptiStart E LRE357	37–50	Thermal relay OptiStart E LRE357-93A-(37-50A)	330330	
	OptiStart E LRE359	48–65	Thermal relay OptiStart E LRE359-93A-(48-65A)	330331	
	OptiStart E LRE361	55–70	Thermal relay OptiStart E LRE361-93A-(55-70A)	330332	
	OptiStart E LRE363	63–80	Thermal relay OptiStart E LRE363-93A-(63-80A)	330333	
	OptiStart E LRE365	80–93	Thermal relay OptiStart E LRE365-93A-(80-93A)	330334	

Technical specification

Type			LRE01	LRE02	LRE03	LRE04	LRE05	LRE06	LRE07	LRE10	LRE12	LRE14	LRE16	LRE21	LRE22	LRE32	LRE353	LRE355	LRE357	LRE359	LRE361	LRE363	LRE365
Trip time as per GOST IEC 60947-4-1 at an ambient temperature of 20 °C																							
Setpoint ratio		Initial condition	—																				
1,05		Cold	> 2 h																				
1,2		Hot	< 2 h																				
1,5			< 4 min																				
7,2		Cold	2 s < Tp ≤ 10 s																				
Trip time in case of phase interruption as per GOST IEC 60947-4-1 at an ambient temperature of 20 °C																							
Setpoint ratio		Initial condition	—																				
Any two phases	Three phases																						
1	0,9	Cold	> 2 h																				
1,15	0	Hot	< 2 h																				
Self-return to the initial position after tripping, min			1,5																				
Main circuit specifications																							
Rated insulation voltage Ui, V			690																				
Protection degree in accordance with GOST 14254			IP20																				
Rated operating voltage Ue, V			690																				
Trip class as per GOST IEC 60947-4-1			10 A																				
Temperature compensation, °C			-20 ÷ + 40																				
Conductor connection																							
Flexible cable with lug, mm²		1 conductor	1...4														4...35						
Flexible cable without lug, mm²			1...6																				
Rigid cable, mm²																							
Auxiliary circuit specifications																							
Rated insulation voltage Ui, V			690																				
Insulation resistance, min, MOhm			10																				
Rated operating AC voltage, V			380																				
Rated operating voltage Ue, V			690																				
Conditional outdoor thermal current Ith, A			5																				
Rated operating current	AC-15	380 V	1,58																				
Short circuit protection, type gG fuse, A			5																				
Conductor connection																							
Flexible cable with lug, mm²		2 conductors	1...2,5																				
Flexible cable without lug, mm²																							
Rigid cable, mm²																							
Weight, max, kg			0,17														0,25						

Accessories

Terminal blocks OptiStart E LAEB

Appearance	For thermal relay	Product name	Code
	LRE01-LRE32	Terminal block OptiStart E LAEB1 for relay LRE01-35	334525
	LRE353-LRE365	Terminal block OptiStart E LAEB3 for relay LRE322-365	334526

Electric schematic

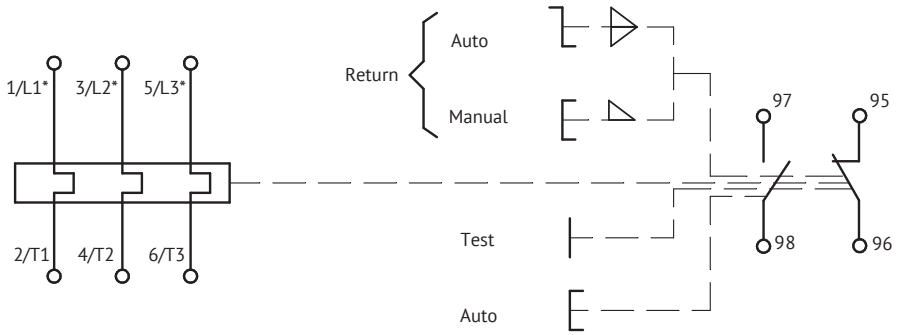

* Designation

Overall dimensions (mm)

Relay LRE01 - LRE35

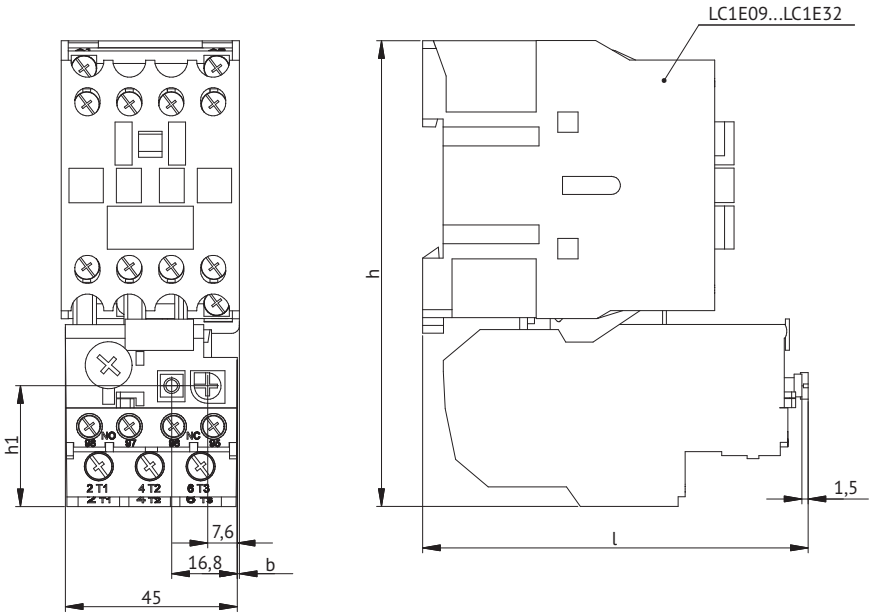

Installation directly under contactors LC1E06...35, connection using screw terminals.

LRE01...LRE32				
With contactors	LC1E0910-LC1E1201	LC1E1810, LC1E1801	LC1E2510, LC1E2501	LC1E3210, LC1E3201
b	0,5	0	10,5	
h	120		129	
h1	31			
I	99,81		108,5	110,5

Relay LRE01 - LRE35, used with terminal block LAEB1

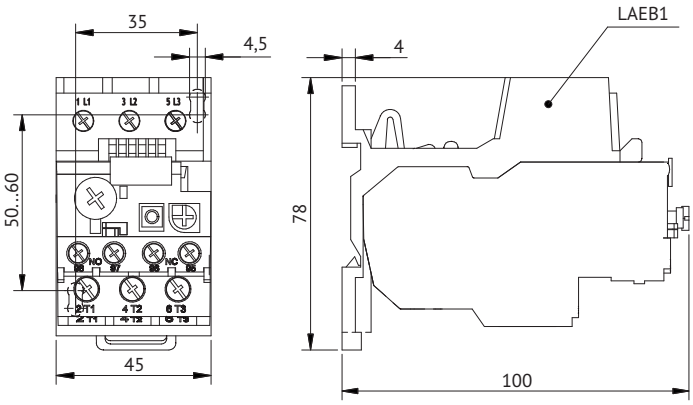

Relay LRE3**

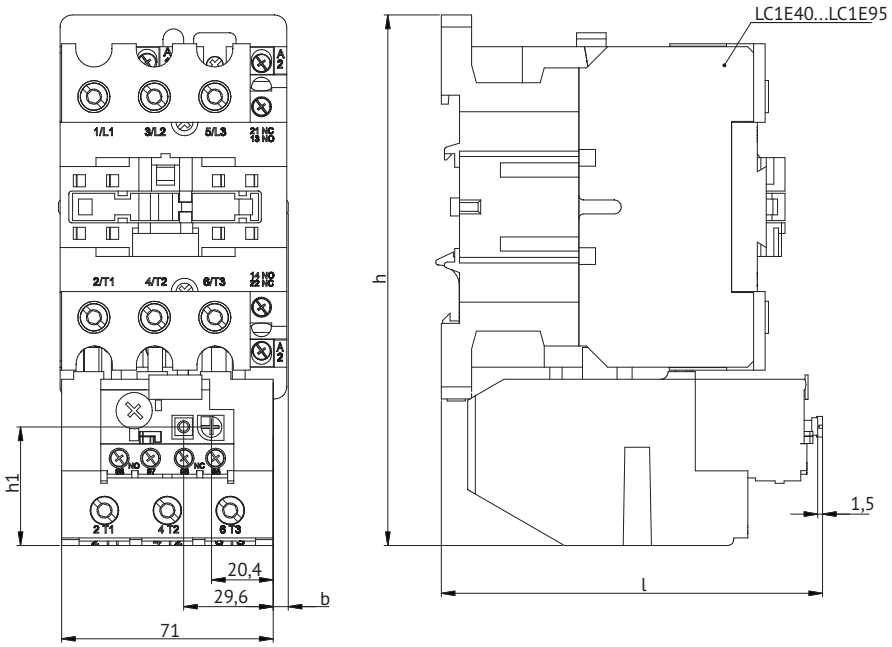

Installation directly under contactors LC1E40...95, connection using screw terminals.

LRE353...LRE365		
With contactors	LC1E40...LC1E63	LC1E80...LC1E95
b	5	8,5
h	176	180
h1	39,2	
I	126	131,5

Relay LRE3***, used with terminal block LAEB3

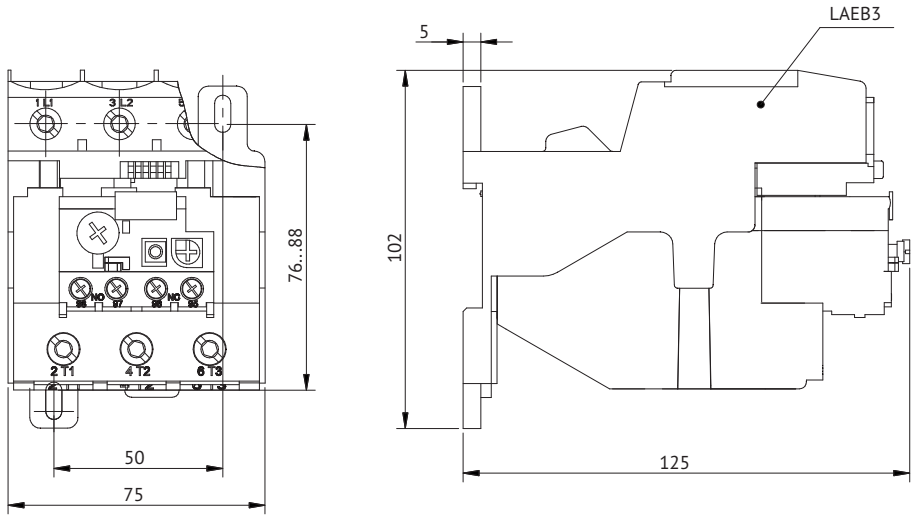

OptiSave

Automatic transfer switch units

OptiSave L Automatic transfer switch unit of simplified functional characteristics 495

OptiSave H Automatic transfer switch unit of extended functional characteristics 501

OptiSave ATS units are designed to control automatic switching from the primary supply to the standby source in the event of a failure or disconnection of the primary supply. Used as a part of ATS cabinets in guaranteed and uninterruptible power supply systems for reliability categories I and II electrical consumers in accordance with the EIC requirements.

Automatic transfer switch unit of simplified functional characteristics

OptiSave L

495

Switched line: 400 V (L1, L2, L3, N)
ATSU supply voltage: 220 V
Maximum load current: 5 A
Switching units: contactors
Status of inputs and operating modes: LED indication
Din-rail mountable

Automatic transfer switch unit of extended functional characteristics

OptiSave H

501

Switched line: 400 V (L1, L2, L3, N)
ATSU supply voltage: 220 V AC or 12-24 V DC
Switching units: load switches and circuit breakers with electromagnetic and motor drives, contactors
Remote control and dispatching via Modbus

OptiSave

Automatic transfer switch units

OptiSave H automatic transfer switch unit is a control unit designed for automatic transfer to a standby line in the event of a fault or interruption of the operating line. The device is designed to operate as a part of control cabinets for automatic switching of backup power supply in systems of guaranteed and uninterruptible power supply of three-phase electric consumers of I and II connection category according to the EIC requirements.

Designation

OptiSave H - 2 4 3 - U3

1 2 3 4 5 7

1	Series	OptiSave			
2	Classification by functionality and characteristics	L — simplified design	H — extended features		
3	Supported no. of inputs	2			
4	Supported number of controllable switching devices	2 — switching devices (for the «2 inputs no sectionalizing» diagrams)	3 — switching devices (for the «2 inputs no sectionalizing with non-priority load») diagrams for OptiSave H 3 - switching devices (for the «2 inputs with sectionalizing» diagrams) for OptiSave L	4 — four switching devices (input switching device, sectional switching device and switching device for non-priority load)	
5	Supports switching device status indication	0 — none	1 — available «on / off»	2 — available «on/off», «emergency operation», «removed»	3 — indication of the state of the switching unit and the mains on the LCD display is added to paragraph 2
6	Supported as one of the generator inputs	G — yes	In the absence of designation - none		
7	Climatic and placement category	UHL4	U3		

Codes indicated in the chapter tables are subject to change. If you did not find the necessary codes on the website, please call KEAZ customer service.

Selection guide

	OptiSave L-220	OptiSave L-230	OptiSave H-243	OptiSave H-233-G
Appearance				
Code	248974	248956	281763	285581
Full-load current, A (AC1 at 250 V)	5	5	16	16
Switching device control				
Contactors control	+	+	+	+
Control of electromagnetic drive circuit breakers			+	+
Control of motor-driven circuit breakers			+	+
Control of motor-driven load break switches			+	+
Input type				
Supply to primary and standby input from transformer substation	+	+	+	+
Power supply of one of the inputs from generator set				+
Functionality				
Voltage control	+	+	+	+
Phase loss monitoring	+	+	+	+
Phase sequence control	+	+	+	+
Voltage unbalance monitoring	+	+	+	+
Alarm indication	+	+	+	+
Option to connect an external alarm device via dry relay contacts			+	+
Option of remote locking of front panel buttons			+	+
Supported no. of inputs	2	2	2	2
Supported number of controllable switching devices	2	3	4	3
Input status indication	+	+	+	+
«On/off» status indication of switching devices			+	+
«Emergency shutoff», «removed» status indication of switching devices			+	+
LCD display			+	+
Control and dispatching via Modbus			+	+
Mounting				
din-rail	+	+	+	+
mounting plate	+	+		
switchboard door			+	+
Protection class as per GOST 14254				
housing, front panel side	IP 20		IP 54	IP 54
terminals	IP 20		IP 20	IP 20
Electromagnetic compatibility				
Classification of operating conditions according to GOST R 51317.4.5	-		Level 3	Level 3
Impulse noise and overvoltage immunity per GOST R 51317.4.5	-		Level 3	Level 3
Electrostatic discharge immunity per GOST 30804.4.2	-		Level 3	Level 3
Operating temperature range, °C	+1 to +40		-40 to +45	-40 to +45

OptiSave L Automatic transfer unit of simplified functional characteristics

The OptiSave L automatic transfer unit is designed for building various low-cost solutions based on contactors.

Series advantages

Easy to set up. The units are configured from the front panel and do not require specialized software or additional tools.

Guaranteed compatibility with OptiStart K and PML, OptiDin MK contactors.

Made in Russia. Suitable for import substitution.

Ease of installation. Compact dimensions, can be mounted on a din-rail or mounting panel.

Convenient operation. Indication of input status and emergency modes on the front panel.

Adjustable hysteresis. Elimination of looping in weak networks.

Operation support of the main electrical schemes. 2 operating inputs without sectionalizing; 2 operating inputs with sectionalizing.

Technical specification

Parameter	Value	
Design version	OptiSave L-220	OptiSave L-230
Switched line type	three-phase four-wire L1, L2, L3, N	
Number of switched units	2	3
Rated operating voltage (Ue), V	220/380	
Mains frequency (f), Hz	50	
Overvoltage (phase) trip settings $>U_B$, V	230...270	
Undervoltage (phase) trip settings $<U_H$, V	150...200	
Hysteresis of the low threshold «ΔU_H», V	5...30	
Phase skew: difference between Uв in one of the phases and U_H in any other, V	10...100	
Trip delay of the main input relay in the event of the controlled parameters exceeding the allowable range (t_{off}), s	0...20	
Delayed actuation of the automatic transfer relay (t_{on}), s	0... 10	
Delayed reverse switching to the main input in the event of the parameter recovery (t_{return}), s	0...30, no reset	0...10
Maximum load current of AC1 utilization category at 250 V, A	5 *	
Switching wear resistance, cycles	$>10^6$	
Overall dimensions, mm	71 x 90 x 65	
Weight, kg, max.	0,3	

* it is recommended to apply protection circuits against commutation surges, the universal parameters are 100 Ohm and 0.1μF

Operating conditions

OptiSave L is manufactured in the climatic version of UHL with the location class 4 in compliance with the requirements of GOST 15150 and is designed for operation under the conditions specified in the table.

Parameter	Value
Operating temperature range, °C	+1...+40
Environmental pollution degree according to GOST 9920	2
Relative humidity at +25 °C, %	up to 80
Height above the sea level, m	up to 2000
Nominal working values of mechanical influencing factors according to GOST 30631	M4
EMC protection class according to GOST R 51318.14.1	0
Operating position in space	random
Operating mode	continuous
Protection class as per GOST 14254	IP20

Purpose of controls and LEDs

On the front panel of the ATSU (figure below) there are knobs for setting the relay operating mode and indicators of the mains status for input 1 and input 2. The top and bottom of the ATSU has terminal blocks for connecting external circuits to the ATSU.

Front panel of OptiSave L-220

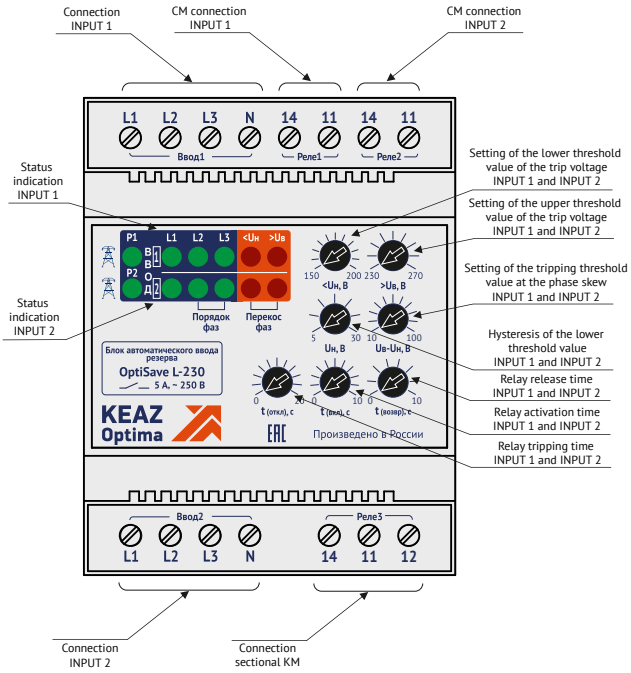

Front panel of OptiSave L-230

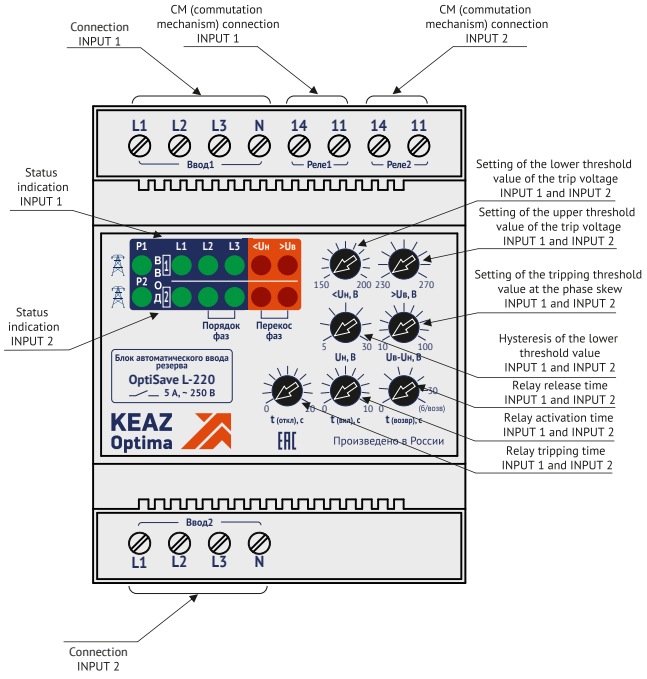

Indication of operating modes by LEDs located on the front panel

LED	Mode
«P1» (green)	Relay P1 turned on
«P2» (green)	Relay P2 turned on
«L1», «L2», «L3» (green)	The input voltage corresponds to the set parameters
«<UH» (red)	Input voltage below the set threshold / phase skew
«>UB» (red)	Input voltage is above the set threshold / phase skew

Timing charts and operation description

OptiSave L-220 time diagram

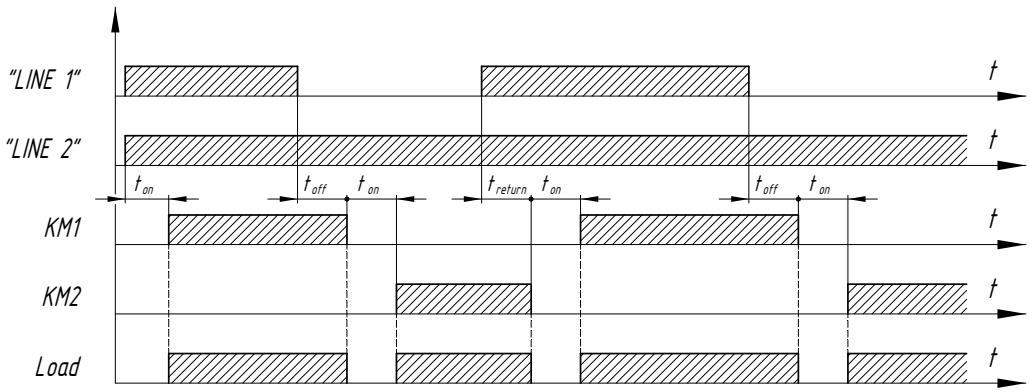

Description of OptiSave L-220 operation

After the power has been applied to the device, when the mains voltage is within the allowable range, LEDs L1, L2, L3 - «LINE 1» and L1, L2, L3 - «LINE 2» are activated. Then, with the delay of $t_{on,}$ the input relay 1 is actuated, LED «P1» is turned on, and the power is supplied to the load.

If during the connection of the controlled network, the sequence of the phases on «LINE 1» or «LINE 2» inputs has been broken, «L2», «L3» LEDs of the corresponding input flash.

In the event of a fault on input 1 (the voltage at any phase is less than the tripping setpoint when the voltage is low «<UH»), the «<U» LED is turned on, after the tripping time delay t_{off} count has been performed, LED «P1» and LED L1, L2, L3 corresponding to the emergency phase are turned off. Then the input relay 1 is actuated and the load is cut off from input 1. If the voltage at any of the phases is above the tripping setpoint at an increased voltage «> UB», «> U» LED is turned on and the tripping goes without delay. If the voltage on the input «LINE 2» is within the norm, then after the t_{on} the input relay 2 is actuated, «P2» LED is turned on and the load is connected to «LINE 2». When the power supply is recovered on the input «LINE 1» after the release time - t_{return}, switching to input «LINE 1» is performed.

The tripping time - t_{off} - is set in such a way that in the case of short-term voltage slumps on the line with the duration t <t_{off}, there was no switching of the line.

In the event of a phase loss on «LINE 1», the actuation of input relay 1 and the disconnection of the load from input 1 occur without any time delay, and the actuation of input relay 2 and the load connection - with the make-time delay - t_{off}.

OptiSave L-230 time diagram

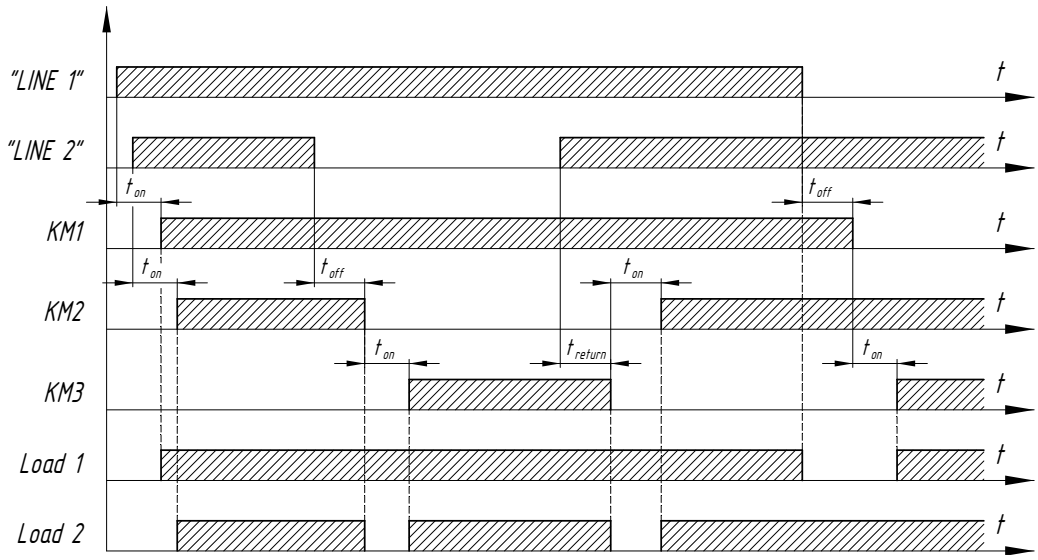

KM — commutation mechanism (a contactor, a starter) (or switching device (SD))

Description of OptiSave L-230 operation

After the power has been applied to the device, when the mains voltage is within the allowable range, LEDs L1, L2, L3 - «LINE 1» and L1, L2, L3 - LINE 2 are activated. Then, with the delay of the make time - t_{on}, the input relay 1 and the input relay 2 are actuated, LEDs «P1» and «P2» are turned on.

If during the connection of the controlled network, the sequence of the phases on «LINE 1» or «LINE 2» inputs has been broken, «L2», «L3» LEDs of the corresponding input flash.

In the event of a fault on input 1 or input 2 (the voltage at any phase is less than the tripping setpoint when the voltage is low «<UH»), the «<U» LED is turned on, after the tripping time delay - t_{off} - count has been performed, emergency input relays (P1 or P2) are disconnected. If the voltage at any of the phases is above the tripping setpoint at an increased voltage «> UB», «> U» LED is turned on and the tripping goes without delay. Further on, with a delay determined by the make-time setpoint - t_{on}, input relay P3 is actuated, that controls the activation of the sectional switching device.

When the voltage on the emergency input is recovered with a delay determined by the setpoint t_{return}, the relay P3 is disconnected and the corresponding relay P1 or P2 are actuated. The high-speed ATS returns to the initial condition.

Possible malfunctions of OptiSave L and troubleshooting

Potential malfunction	Cause	Remedy
No indication at switching on the network	Contact fault in the terminal block	Disconnect the network and check the quality of the contacts in the terminal block
	Malfunction in the ATSU scheme	Disconnect the network, dismount the high-speed ATS and contact the services department of the manufacturer
No indication of one of the operating modes	Malfunctioning LED	Disconnect the network, dismount the high-speed ATS and contact the service department of the manufacturer

Connection diagrams

The solution is advisory. The manufacturer of the LVCD, conducting acceptance tests, is held liable for the performance of the LVCD on the basis of the given complex, in compliance with the requirements of GOST R 51321-2007. KEAZ reserves the right to introduce changes to this document, as well as the materials specified therein, without prior notice.

A recommended connection diagram for connecting switchgear to the ATSU OptiSave L-220

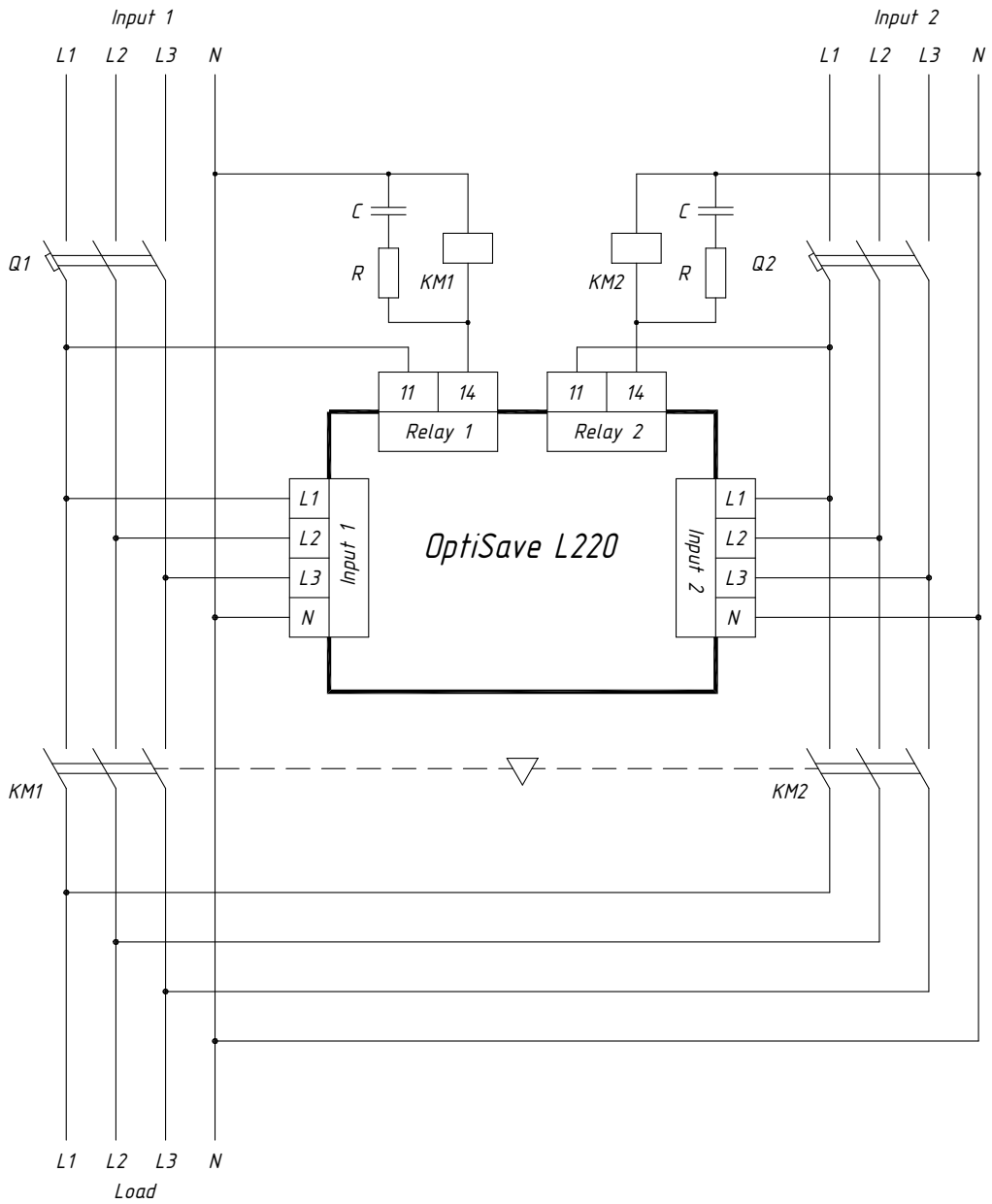

Q1, Q2 — circuit breakers
KM1, KM2 — switching units (contactors, starters);
RC — protection circuit against switching surges.

A recommended connection diagram for connecting switchgear to the ATSU OptiSave L-230

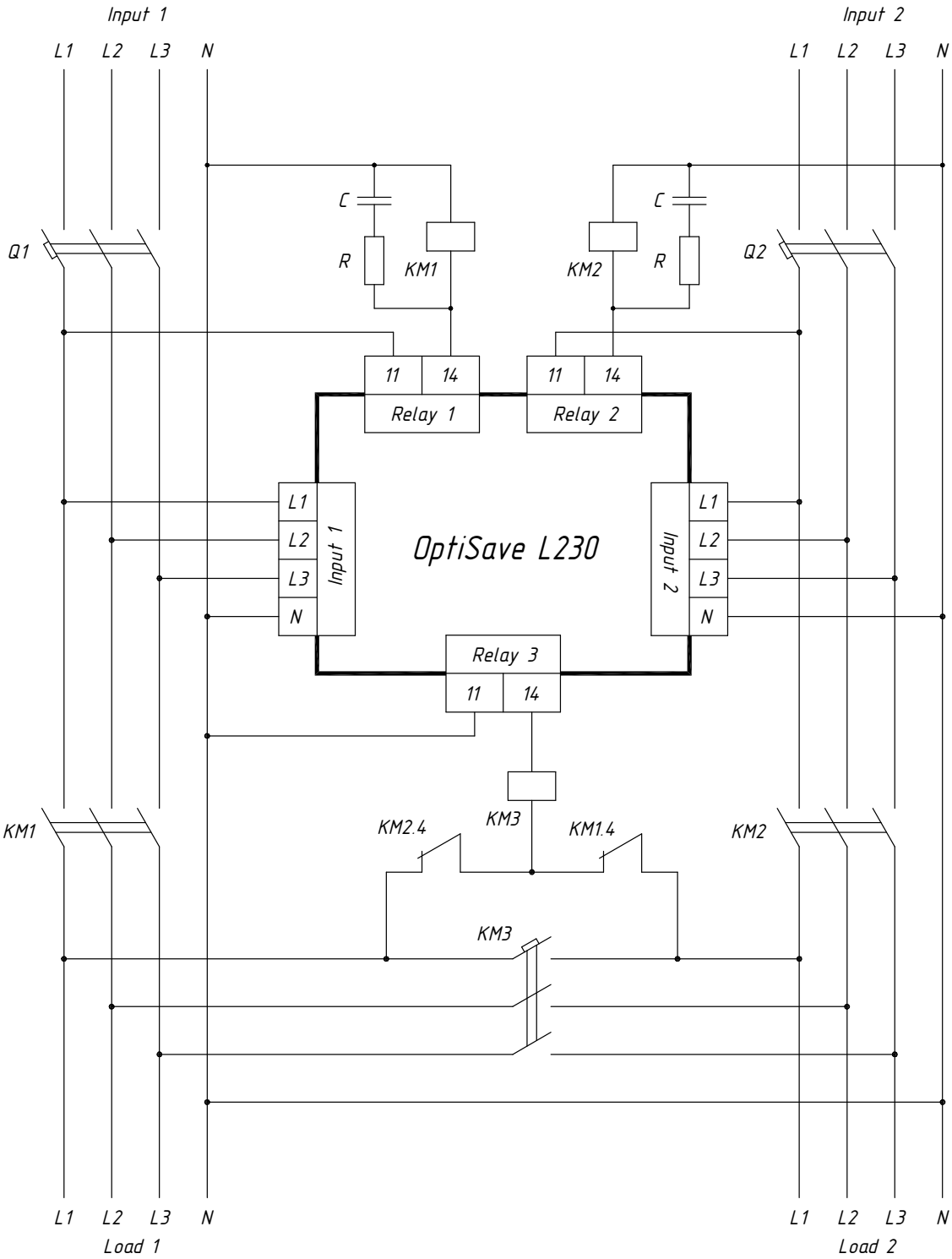

Q1, Q2 — circuit breakers
KM1, KM2, KM3 — switching units (contactors, starters);
RC — protection circuit against switching surges.

Overall and connection dimensions (mm)

OptiSave L-220

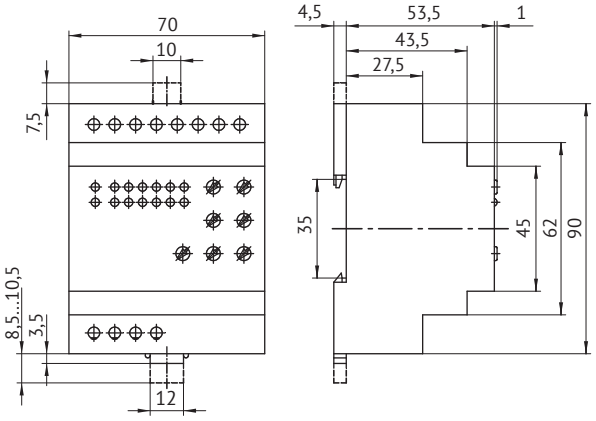

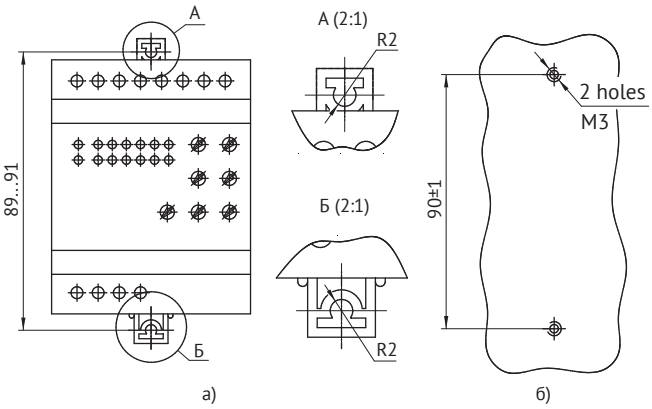

a) connection dimensions of the high-speed ATS connecting elements for panel mounting type
b) mounting panel cutout

OptiSave L-230

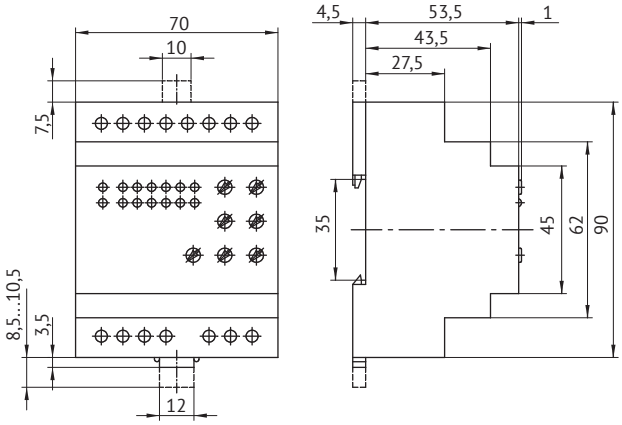

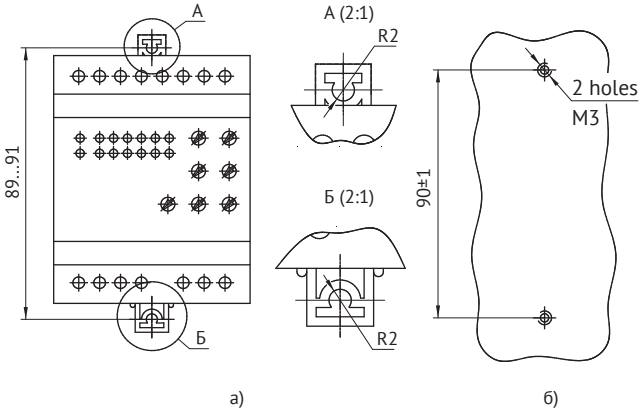

a) connection dimensions of the high-speed ATS connecting elements for panel mounting type
b) mounting panel cutout

OptiSave H Automatic transfer switch unit of extended functional characteristics

OptiSave H automatic transfer switch unit is designed to build various ATS functional solutions based on contactors, load switches and electromagnetic and motor driven circuit breakers with the option of being integrated into dispatching systems via Modbus protocol.

Series advantages

Simple and quick installation both on the switchboard door and on the din-rail.

Compatibility with KEAZ switching equipment.

- Electromagnetic interference resistance and low interference emission.
- Temperature range: -40 to +45°C:
- Protection class: IP54 (front panel).

Made in Russia. Suitable for import substitution.

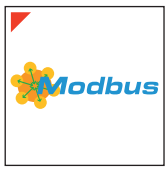

Remote control and dispatching via Modbus.

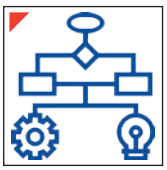

Great configurability potential for various tasks that requires no programming skills, algorithm flexibility.

Shock-proof, front panel locking, password setting.

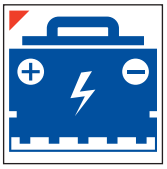

Use in uninterruptible power supply systems - provision of DC power supply of the ATS unit.

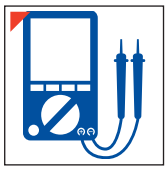

Network and switching equipment status is displayed on LCD display, mnemonic diagram.

Technical specification

Parameter	Value
Switched line type	three-phase four-wire L1, L2, L3, N
Number of monitored power supply inputs	2
INPUT 1 and INPUT 2 supply voltages (U_s), V	180...400
AC frequency across input terminals (f), Hz	50
Maximum switching voltage at 50 Hz 5 A AC, V	400 *
Maximum load current of AC1 utilization category at 250 V, A	16 *
Overvoltage trip settings for INPUT 1 and INPUT 2 (U_{max}), V	235...280 [1]
Undervoltage trip settings for INPUT 1 and INPUT 2 (U_{min}), V	165...225 [1]
Trip settings for input phases voltage unbalance (U_{as}), V	10...115 [1]
Voltage hysteresis (U_h), V	5...15 [1]
Switching device switch-on time settings (t_{sw}), s	0,1...360 [3]
Infinite loop protection time settings (t_{loop}), c	0,1...900 [3]
Trip time settings for voltage over Umax ($t_{trip.u.max}$), s	0,1...900 [3]
Trip time settings for voltage under Umin ($t_{trip.u.min}$), s	0,1...900 [3]
Trip time settings for phase reversal failure ($t_{trip.ph.r}$), s	0,1...900 [3]
Trip time settings for input phase asymmetry ($t_{trip.ph.as}$), s	0,1...900 [3]
Switching wear resistance, cycles	> 106
Overall dimensions, mm	155 x 155 x 72 **
Weight, kg, max.	0,85

* use of switching surge protection circuits is recommended;
** overall and connection dimensions for mounting on a TN35 rail in accordance with GOST R IEC 60715 or for mounting in a window on a panel are given in Appendix B;
[1] parameter setting step: 5 V;
[2] parameter setting step: 1 Hz;
[3] parameter setting step:
0.1 s in the 0.1 to 1 s range;
1 s in the 1 to 10 s range;
5 s in the 10 to 100 s range;
20 s in the 100 to 400 s range;
50 s in the 400 to 1000 s range.

Attention! The ATSU does not provide for frequency control, and the frequency in the range from 40 to 65 Hz is considered the norm by default.

Modbus protocol data transmission parameters

Parameter	Value
Physical protocol	RS-485
Data transfer protocol	Modbus RTU
Supported access addresses	1...247
Data transfer rate, bit/s	9600
Stop bit	1
Parity	NONE

Operating conditions

Parameter	Value
Operating temperature range, °C	-40...+45
Environmental pollution degree according to GOST IEC 60947-1	3
Relative air humidity, %	up to 98 (at 25 °C)
Height above the sea level, m	up to 2000
Nominal working values of mechanical influencing factors according to GOST 30631	M4
Electrostatic discharge immunity according to GOST 30804.4.2 (IEC 61000-4-2)	Level 3
Nanosecond impulse noise immunity in accordance with GOST 30804.4.4 (IEC 61000-4-4)	Level 3
High-energy microsecond impulse noise immunity in accordance with GOST R 51317.4.5 (IEC 61000-4-5)	Level 3
Immunity from voltage dips and short interruptions in accordance with GOST 30804.4.11 (IEC 61000-4-11)	Level 3
Operating position in space	random
Operating mode	continuous
Protection class as per GOST 14254 – housing – terminals	 IP54 IP20

Purpose of controls and LEDs of OptiSave H-243

The ATSU is an independent device and features a housing made of non-combustible thermoplastic material, printed circuit boards with electronic components placed inside it, and fasteners.

The controls and indication elements are placed on the front panel, and connectors for connecting external devices are placed on the patch panels.

The front panel of the ATSU has is a mnemonic scheme, LCD-indicator, LED indicators of phase voltages, voltage thresholds, readiness of inputs, switching devices status, alarm state and control buttons.

Front panel of OptiSave H-243

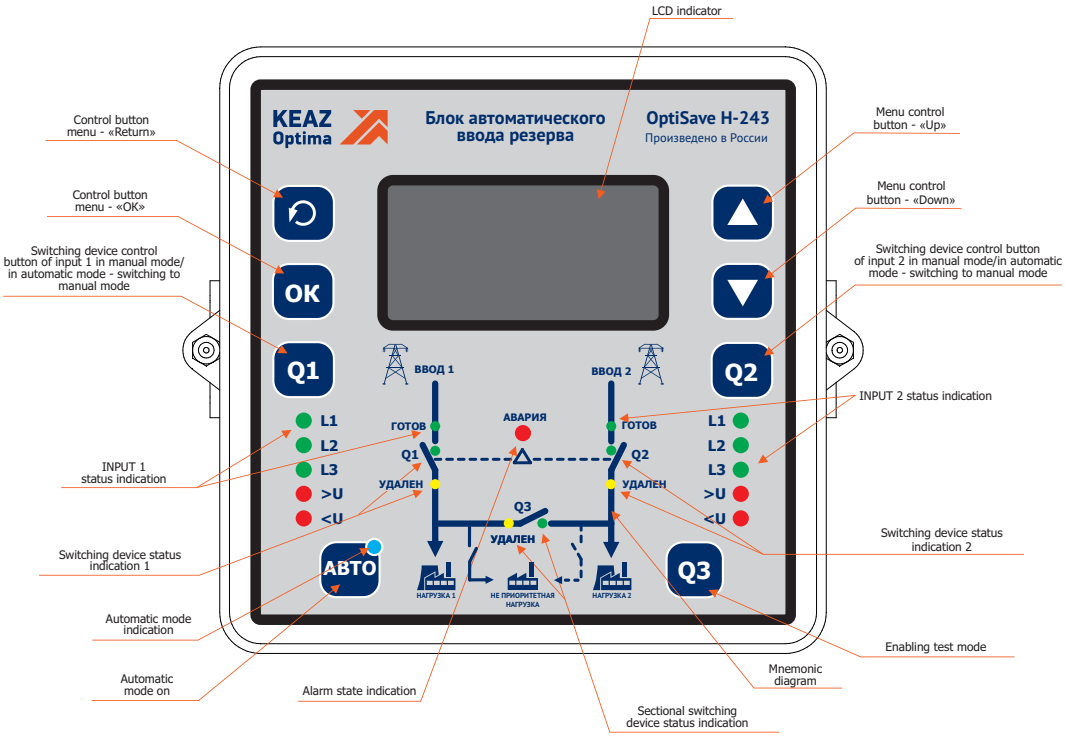

Upper patch panel of OptiSave H-243

The upper patch panel of the ATSU contains connectors for connecting power supply inputs («INPUT 1» and «INPUT 2»), external operational power supply U_{suppl}, a bus for data transmission via the Modbus protocol and an external alarm device.

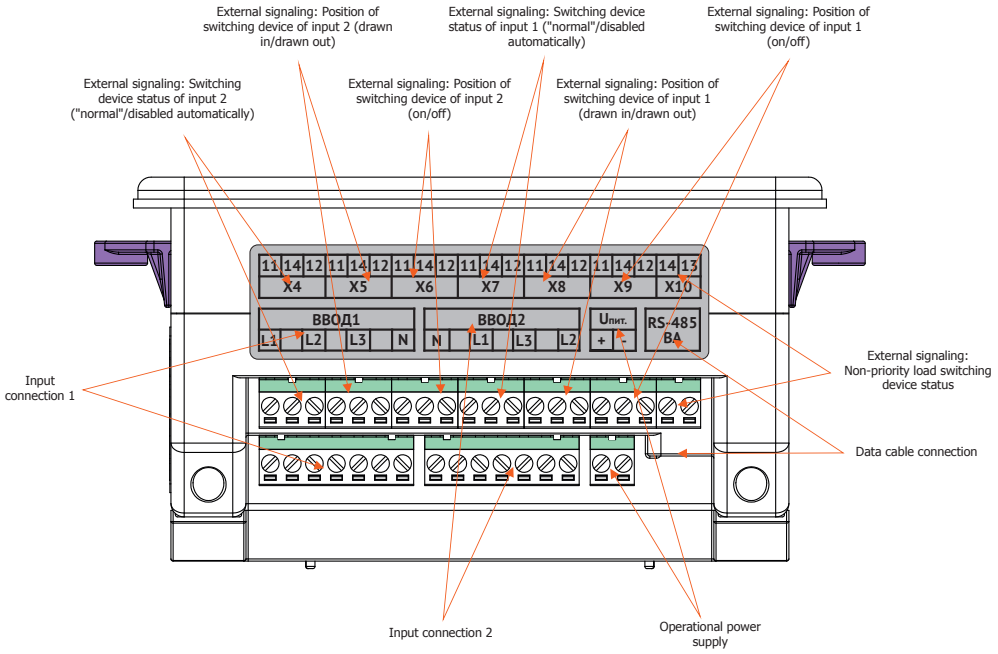

Lower patch panel of OptiSave H-243

The lower patch panel contains connectors for connecting an external alarm device, control contacts for external switching devices, as well as for control devices for switching devices. Purpose of the «X12» connector contacts is shown in the table.

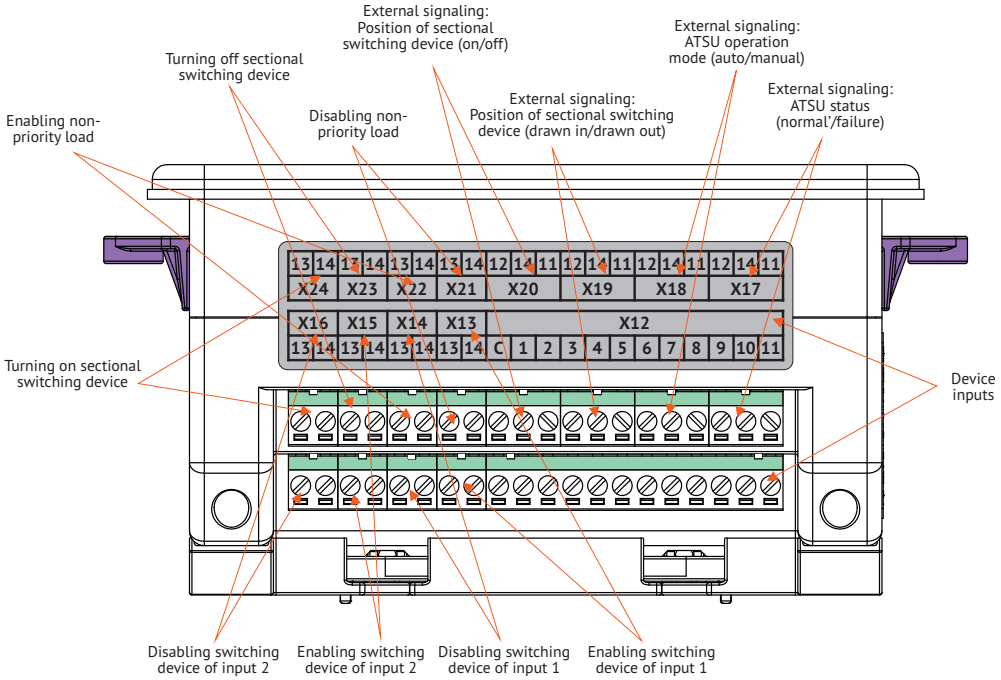

Purpose of inputs X12

Pin number	Purpose
C	Common
1	Status of switching device of INPUT 1 When closed, it signals the ON state of the INPUT 1 switching device.
2	Emergency trip contact. When closed, it signals the emergency trip of INPUT 1 safety device.
3	«Removed» status contact. In the closed state, it signals the removal of INPUT 1 switching device (withdrawable version).
4	Status of switching device of INPUT 2. When closed, it signals the ON state of the INPUT 2 switching device.
5	Emergency trip contact. When closed, it signals the emergency trip of the safety device of INPUT 2.
6	«Removed» status contact. In the closed state, it signals the removal of INPUT 2 switching device (withdrawable version).
7	Status of the sectional switching device When closed, it signals the ON state of the sectional switching device.
8	Emergency trip contact. When closed, it signals the emergency trip of the sectional safety device.
9	«Removed» status contact. In the closed state, it signals the removal of sectional switching device (withdrawable version).
10	Non-priority load switching device status When closed, it signals the ON state of the non-priority load switching device.
11	Front panel locking. In the closed state, it locks the control buttons on the module's front panel.

Note: Inputs of the X12 connector are discrete. Combining the neutral and terminal «C» of connector X12 can cause the device to malfunction. Use a voltmeter to diagnose the connector - a voltage in the range from 0 to 3.2 V between the diagnosed contact and the common contact «C» indicates the closed state of the corresponding contact.

Timing charts and operation description

The ATSU has 2 operating modes: manual and automatic. By default, the ATSU is switched on in the manual mode.
In the automatic and manual ATSU operation modes, background control of the parameters of the inputs and switching devices is carried out. The voltage is measured separately for each phase of each input.

The decision about the input readiness is made under the following conditions:
- the voltage of each input phase does not exceed the value of the difference of setpoint U_{max} and the hysteresis value (U_h) for a time greater than the setpoint value $t_{trip\ u.\ max}$;
- the voltage of each input phase is not less than the sum of the setpoint U_{min} and the hysteresis value (U_h) for a time greater than $t_{trip\ u.\ min}$.
- the voltage difference between the input phases does not exceed the setpoint value U_{as} for a time greater than the setpoint value $t_{trip\ as.\ ph.}$ in the presence of input phase alternation during the setpoint time $t_{trip\ a.\ ph.}$

Timing diagram in automatic mode with overvoltage, undervoltage of the input and phase asymmetry with the enabled «non-priority load control in automatic mode» function

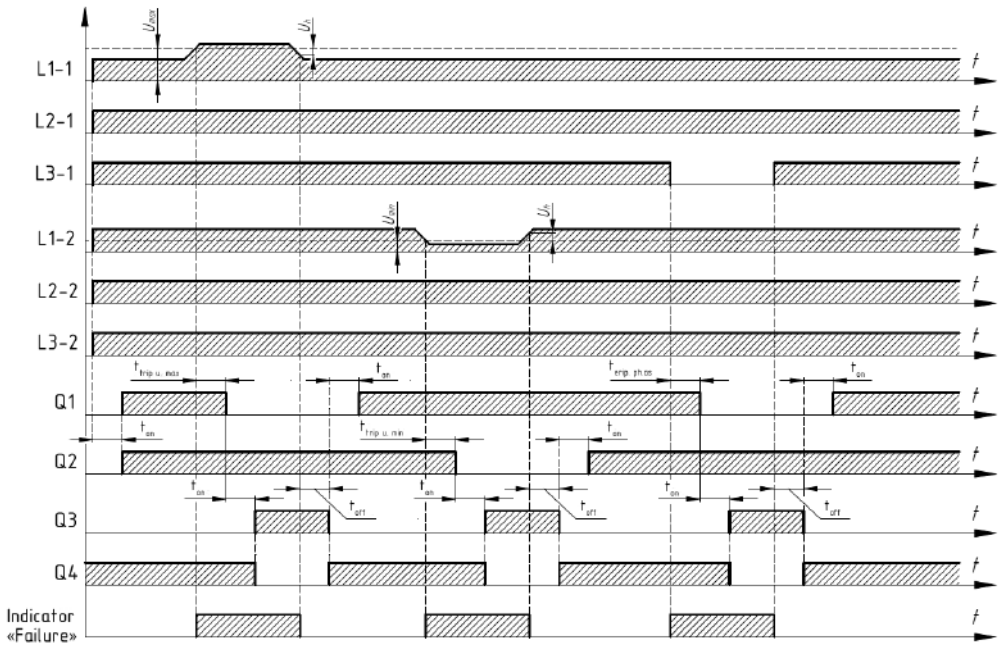

The decision about the failure of the switching device (SD) is made when the SD status changes without the ATSU issuing controlling actions. The ATSU in the automatic mode does not restore the SD's health attribute without the operator's intervention. After the SD failure causes have been eliminated, error reset must be performed in the ATSU menu. In case of the «SD Deleted» signal, the ATSU operation algorithm is blocked.

Automatic mode

The ATSU is switched to the automatic mode by pressing the «AUTO» button for 5 seconds (the corresponding LED will light up). When the ATSU operates in automatic mode, the power supply parameters on inputs 1 and 2 are checked. If the monitored parameters are within the set limits, the ATSU, with a delay of t_{on} (ON time) connects the loads to the corresponding inputs via «Q1» and «Q2». In case of failure at one of the inputs, the load is disconnected from the faulty input and connected to the serviceable input through sectional switching device «Q3». When the power supply is restored to the emergency input, with the self-recovery mode («Input recovery - AUTO») enabled, the ATSU switches to the mode that preceded the emergency: the bus section breaker is turned off, and after the time t_{on} the load is connected to the recovered input. If the non-priority load control mode is enabled, then simultaneously with the sectional switching device, the non-priority load device «Q4» will change its status (it will turn off when the bus section breaker is turned on, and turn on when the bus section breaker is turned off).
Attention! If, in the event of a failure at INPUT 1, the ATSU is switched to INPUT 2, which is also in an failure state, the ATSU turns off the switching devices KM1 and KM2, the «FAILURE» indicator on the front panel turns on and the «dry» contact for controlling the external alarm device is closed.

Manual mode

Switching to manual mode is done by pressing the «AUTO» button when the automatic mode is active or via Modbus protocol. During this switching, the power supply parameters are monitored. The manual mode is used to switch on the selected input directly using the front panel buttons «Q1» or «Q2» and to switch on the bus section breaker using the button «Q3».
INPUT recovery in manual mode can be done under the following conditions:
- «Recover input in manual mode» is enabled in the ATSU settings;
- The INPUT is operational and ready (green LED is on);
- The switching device of the corresponding INPUT is operational;
- The sectional switching device is open.
Recovery occurs while button «Q1» or «Q2» respectively is held down for more than 2 seconds.
The manual operation option for the sectional SD is set in the ATSU menu («Manual Section Control» parameter). The sectional SD is used to connect the load of the faulty INPUT to the serviceable INPUT. The SD is turned on/off by pressing the «Q3» for more than 2 seconds.
Attention! In manual mode, the ATSU allows the simultaneous switching on of the INPUTS and the section (provided that the section control is allowed in the ATSU menu and the SD is operable), therefore, this function can lead to an emergency situation associated with a short circuit of two inputs and the loss of the facility!

Resetting errors and alarms

If necessary, the errors and accidents that occurred during the operation of the ATS can be reset from the appropriate menu of the ATSU.

Indication

Operation modes are indicated by an LCD indicator and LED indicators both in automatic mode and in manual control mode.

The indication displayed on the front panel can be duplicated by signals on external ATS unit connectors and via Modbus protocol.

№	Failure category	Possible cause	Signaling methods	Troubleshooting method
1	Malfunction of the three-phase line of one or two inputs	1) Unacceptable voltage deviation in the phases; 2) Change in phase sequence, emergence of phase asymmetry; 3) Breakage of one or more phases; redundancy switching.	1) Turning on the LED «U>» or «U <»; 2) Flashing of phase indicators «L1», «L2», «L3»; the indicator of the corresponding phase has gone off; 4) In all types of faults switching on of the «Failure» LED, closure of the «dry» contact «Failure», switching off of the indicator «Ready», message on the LCD-indicator.	Elimination of the fault in the faulty three-phase line.
2	Switching device control	Change in SD status without the ATSU issuing controlling actions	The ATSU recognizes such an SD as faulty and a red LED of the corresponding SD lights up. Switching on of the «Failure» LED, closure «dry» contact «Failure», message on the LCD display.	Elimination of inconsistencies and error resetting through the menu.
3	Removing the switching device	«SD removed» signal	Turning on of the LEDs «Failure», «Removed», «dry» contact «Failure».	Switching device recovery.
4	Failure on the line of one or two inputs	Short circuit, overload or other emergency situation that caused the circuit breaker to trip and its emergency contacts to close	Flashing red LED of the corresponding SD. Switching on of the «Failure» LED, closure of the «dry» contact «Failure», switching off of the «Ready» indicator, message on the LCD display.	Elimination of the failure and error resetting through the menu.

For a more detailed description of the menu, settings and connections of the ATSU, see the operation manual.

Connection diagrams

Recommended connection diagram of electromagnetic switching devices to ATSU

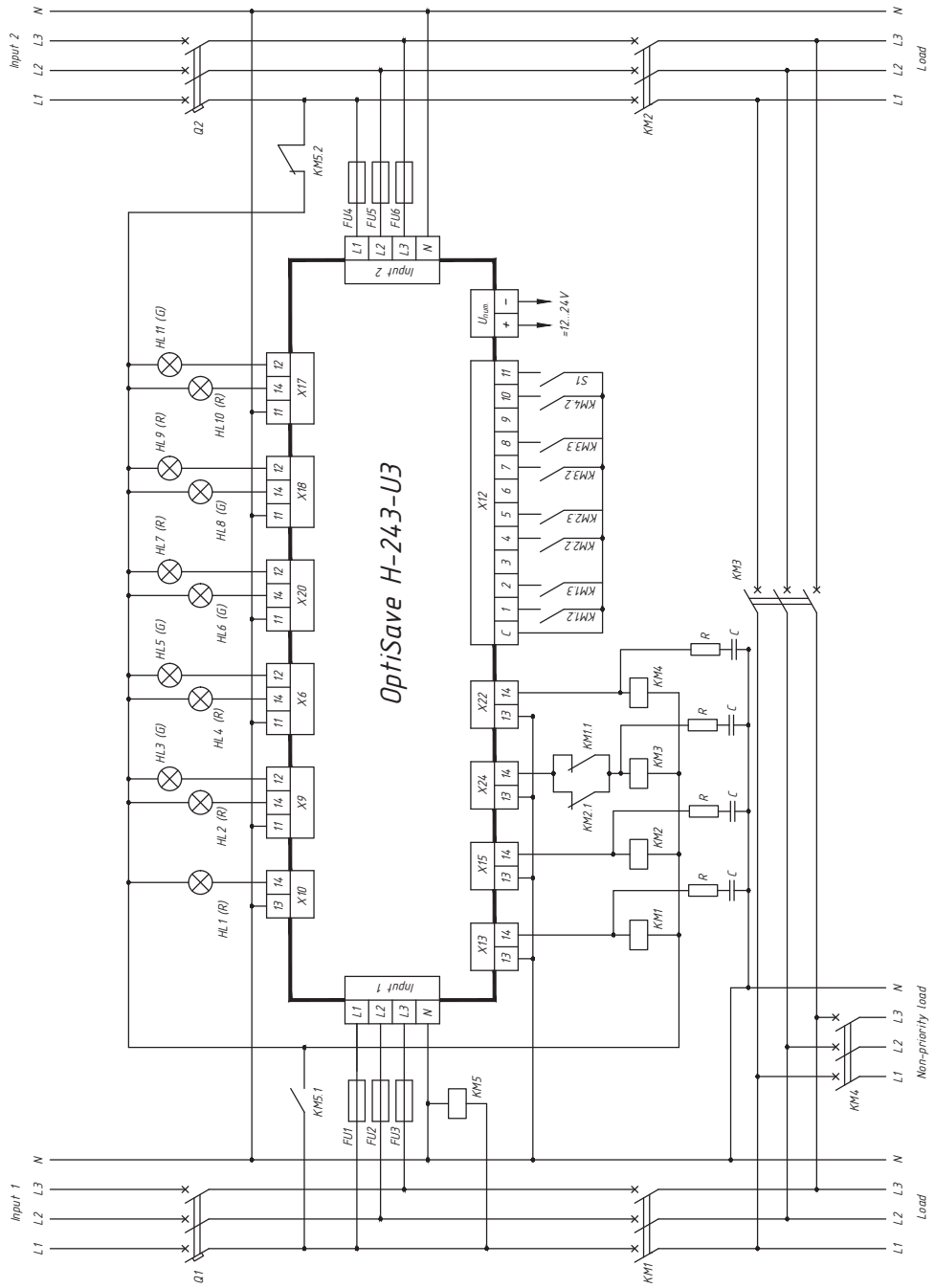

KM1, KM2, KM3, KM4 - switching units (contactors, starters);
KM1.1, KM2.1 - blocking contacts for switching on the sectional switching device;
KM1.2, KM1.3, KM2.2, KM2.3, KM3.2, KM3.3, KM4.2 – signal contacts of switching devices;
KM5 – relays for switching the power supply of external control and signaling devices;
KM5.1, KM5.2 – contacts for blocking simultaneous connection to inputs;
FU1 ... FU6 – fuses;
HL1 – signaling «non-priority load switching device is on»;
HL2 – signaling «Switching device of Input 1 is on»;
HL3 – signaling «Input 1 switching device is off»;
HL4 – signaling «Switching device of Input 2 is on»;
HL5 – signaling «Switching device of Input 2 is off»;
HL6 – signaling «Sectional switching device is on»;
HL7 – signaling «Sectional switching device is off»;
HL8 – signaling «ATSU in automatic mode»;
HL9 – signaling «ATSU in manual mode»;
HL10 – indicator «Normal»;
HL11 – indicator «Failure»;
S1 – front panel locking.

Recommended connection diagram of motor-driven circuit breakers to ATSU

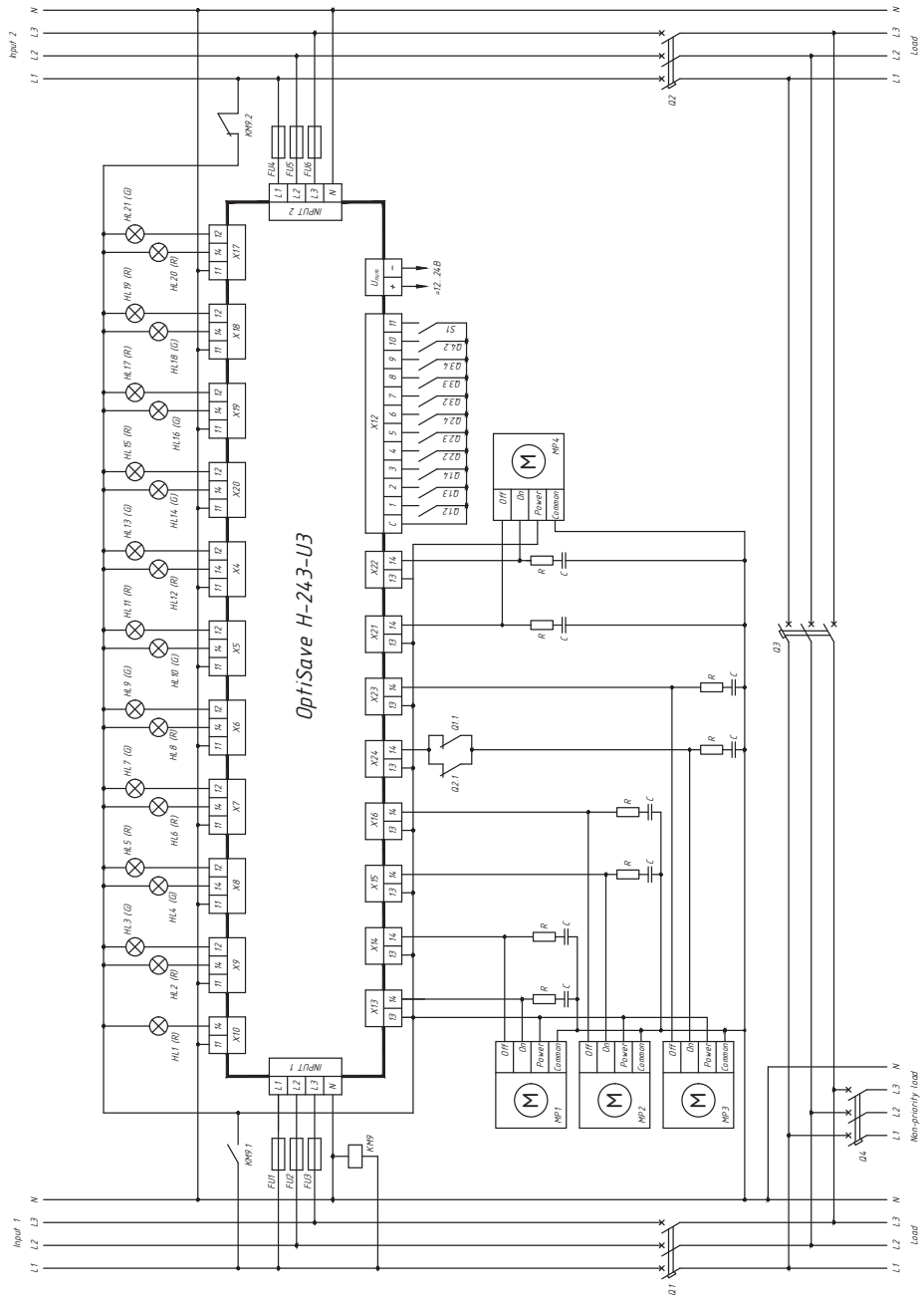

Q1, Q2, Q3, – automatic circuit breakers;
MP1, MP2, MP3 – motor drives for breakers Q1, Q2, Q3;
MP4 – motor drive of the non-priority load breaker;
Q1.1, Q2.1 – contacts blocking bus section breaker switch-on;
Q1.2, Q2.2, Q3.2, Q4.2 – switching devices status control;
Q1.3, Q2.3, Q3.3 – control of emergency operation of circuit breakers;
Q1.4, Q2.4, Q3.4 – «Removed» status contact;
KM9 – relays for switching the power supply of external control and signaling devices;
KM9.1, KM9.2 – contacts for blocking simultaneous connection to inputs ;
FU1 ... FU6 – fuses;
HL1 – signaling «non-priority load switching device on»;
HL2 – indicator «Input 1 switching device is on»;
HL3 – indicator «Input 1 switching device is off»;
HL4 – indicator «Input 1 switching device removed»;
HL5 – indicator «Input 1 switching device installed»;
HL6 – indicator «Input 1 switching device tripped automatically»;
HL7 – indicator «Input 1 switching device in normal mode»;
HL8 – indicator «Input 2 switching device is on»;
HL9 – indicator «Input 2 switching device is off»;
HL10 – indicator «Input 2 switching device removed»;
HL11 – indicator «Input 2 switching device removed»;
HL12 – indicator «Input 2 switching device tripped automatically»;
HL13 – indicator «Input 2 switching device in normal mode»;
HL14 – indicator «sectional switching device is on»;
HL15 – indicator «sectional switching device is off»;
HL16 – indicator «sectional switching device removed»;
HL17 – indicator «sectional switching device installed»;
HL18 – indicator «ATSU in auto mode»;
HL19 – indicator «ATSU in manual mode»;
HL20 – «Failure» indicator;
HL21 – «Normal» indicator;
S1 – front panel locking.

Recommended connection diagram of electromagnetic-driven circuit breakers to ATSU

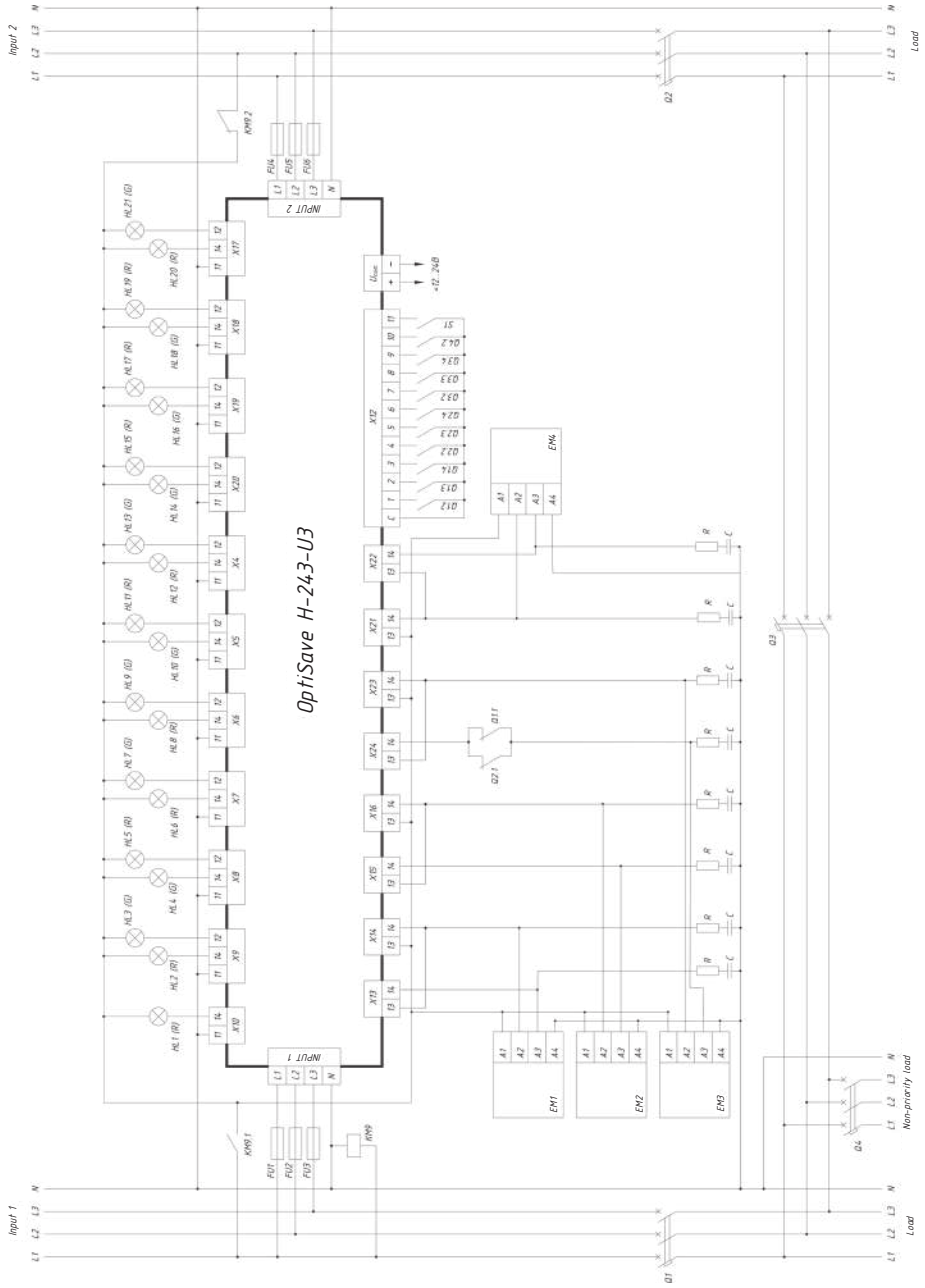

Q1, Q2, Q3, – automatic circuit breakers;
EM1, EM2, EM3 – electromagnetic drives of breakers Q1, Q2, Q3;
EM4 – motor drive of the non-priority load breaker;
Q1.1, Q2.1 – contacts blocking bus section breaker switch-on;
Q1.2, Q2.2, Q3.2, Q4.2 – switching devices status control;
Q1.3, Q2.3, Q3.3 – control of emergency operation of circuit breakers;
Q1.4, Q2.4, Q3.4 – «Removed» status contact;
S1 – front panel locking;
KM9 – relays for switching the power supply of external control and signaling devices;
KM9.1, KM9.2 – contacts for blocking simultaneous connection to inputs ;
FU1 ... FU6 – fuses;
HL1 – signaling «non-priority load switching device on»;
HL2 – indicator «Switching device of Input 1 is on»;
HL3 – indicator «Input 1 switching device is off»;
HL4 – indicator «Input 1 switching device removed»;
HL5 – indicator «Input 1 switching device installed»;
HL6 – indicator «Input 1 switching device tripped automatically»;
HL7 – indicator «Input 1 switching device in normal mode»;
HL8 – indicator «Input 2 switching device is on»;
HL9 – indicator «Input 2 switching device is off»;
HL10 – indicator «Input 2 switching device removed»;
HL11 – indicator «Input 2 switching device installed»;
HL12 – indicator «Input 2 switching device tripped automatically»;
HL13 – indicator «Input 2 switching device in normal mode»;
HL14 – indicator «sectional switching device is on»;
HL15 – indicator «sectional switching device is off»;
HL16 – indicator «sectional switching device removed»;
HL17 – indicator «sectional switching device installed»;
HL18 – indicator «ATSU in auto mode»;
HL19 – indicator «ATSU in manual mode»;
HL20 – «Failure» indicator;
HL21 – «Normal» indicator;
S1 – front panel locking.

Purpose of controls and LEDs of OptiSave H-233-G

The ATSU is an independent device and features a housing made of non-combustible thermoplastic material, printed circuit boards with electronic components placed inside it, and fasteners.

The controls and indication elements are placed on the front panel, and connectors for connecting external devices are placed on the patch panels. The front panel of the ATSU has is a mnemonic scheme, LCD-indicator, LED indicators of phase voltages, voltage thresholds, readiness of inputs, switching devices status, alarm state and control buttons.

Front panel of OptiSave H-233-G

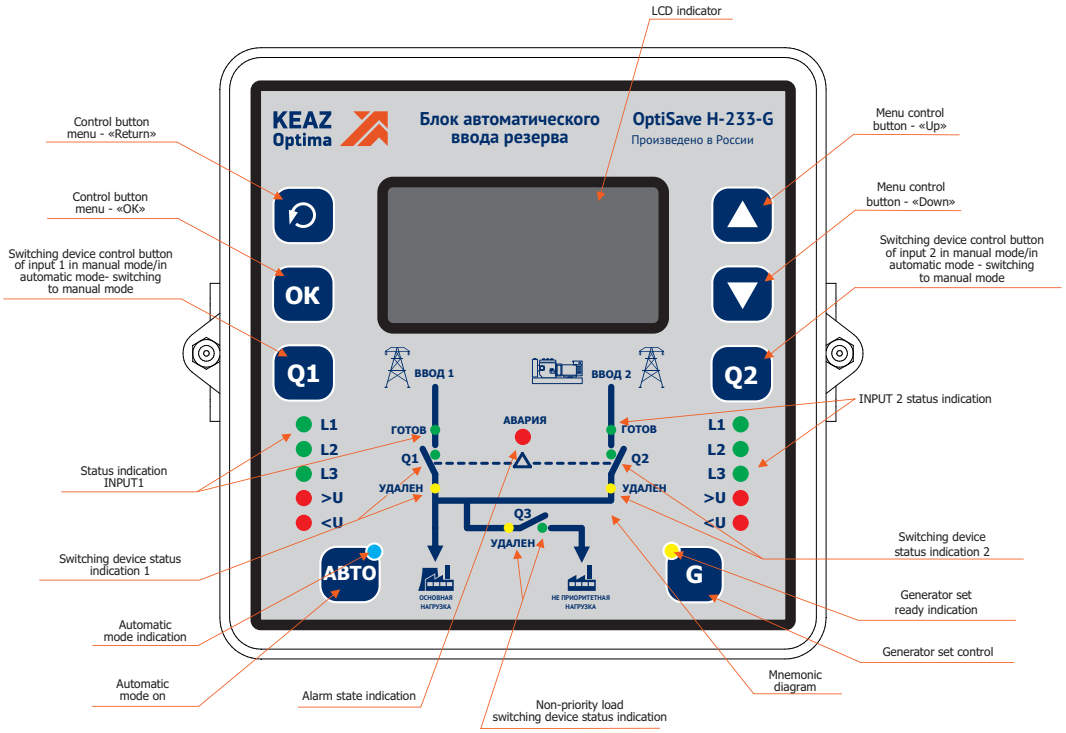

Appearance of the upper patch panel of OptiSave H-233-G

The upper patch panel of the ATSU contains connectors for connecting power supply inputs («INPUT 1» and «INPUT 2»), external operational power supply U_{oper}, a bus for data transmission via the Modbus protocol and an external alarm device. The appearance of the top patch panel and the location and function of the connectors are shown in the figure below.

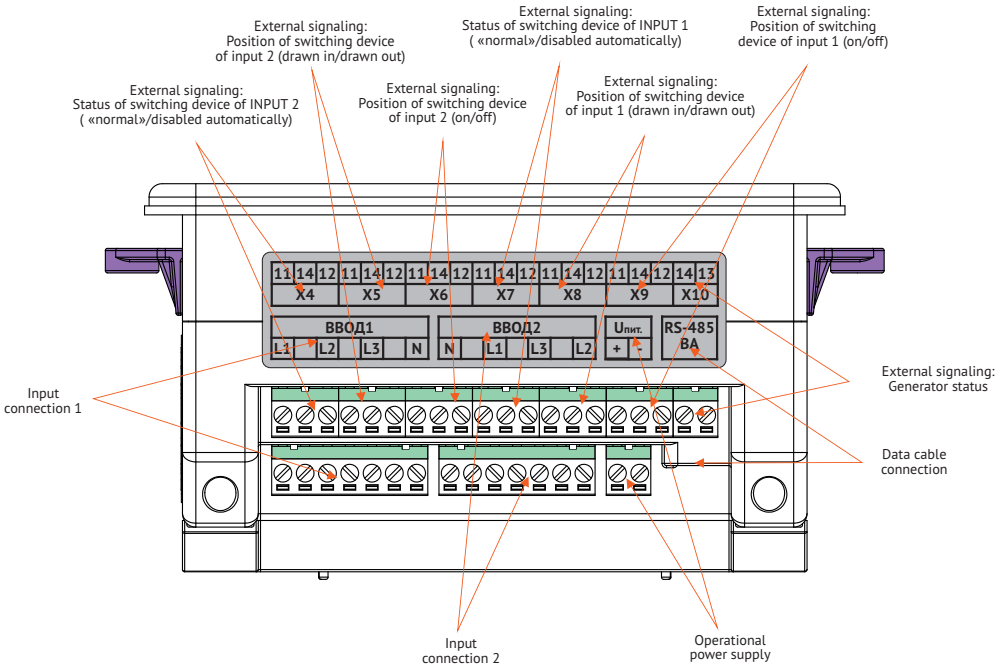

Appearance of the lower patch panel of OptiSave H-233-C

The lower patch panel contains connectors for connecting an external alarm device, control contacts for external switching devices, as well as for control devices for switching devices. The appearance of the lower patch panel and the location and function of the connectors are shown in the illustration below. Purpose of the «X12» connector contacts is shown in the table.

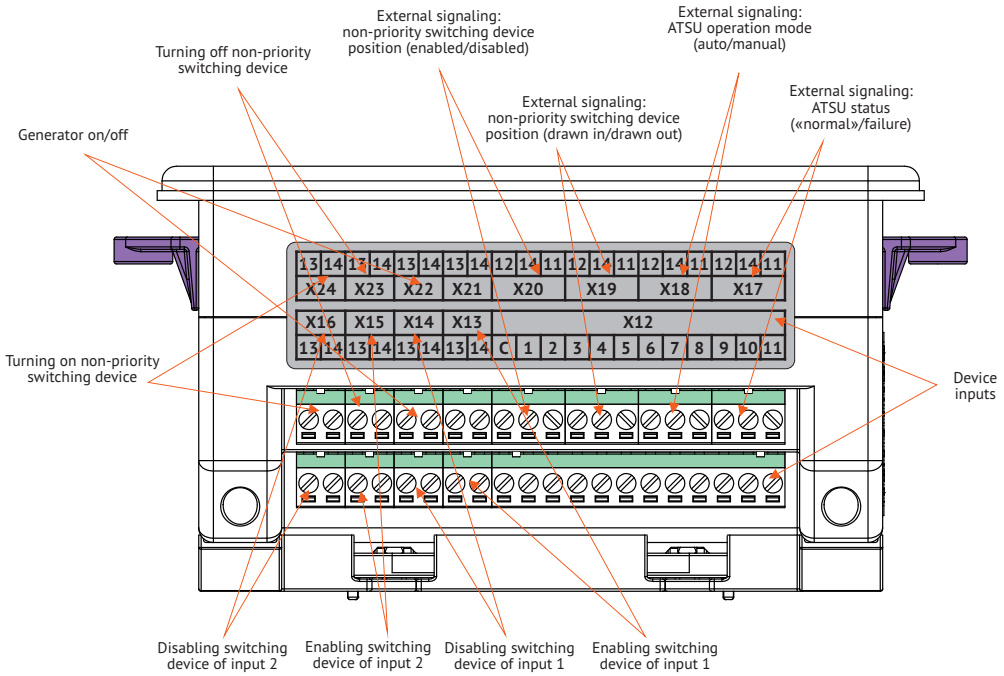

Purpose of inputs X12

Pin number	Purpose
C	Common
1	Status of switching device of INPUT 1 When closed, it signals the ON state of the INPUT 1 switching device.
2	Emergency trip contact. When closed, it signals the emergency trip of INPUT 1 safety device.
3	«Removed» status contact. In the closed state, it signals the removal of INPUT 1 switching device (withdrawable version).
4	Status of switching device of INPUT 2. When closed, it signals the ON state of the INPUT 2 switching device.
5	Emergency trip contact. When closed, it signals the emergency trip of the safety device of INPUT 2.
6	«Removed» status contact. In the closed state, it signals the removal of INPUT 2 switching device (withdrawable version).
7	Status of the sectional switching device When closed, it signals the ON state of the non-priority load switching device.
8	Emergency trip contact. When closed, it signals the emergency disconnection of the non-priority load switching device.
9	«Removed» status contact. In the closed state, it signals the removal of non-priority load switching device (withdrawable version).
10	Not used
11	Front panel locking. In the closed state, it locks the control buttons on the module's front panel.

Note: Inputs of the X12 connector are discrete. Combining the neutral and terminal «C» of connector X12 can cause the unit to malfunction.
Use a voltmeter to diagnose the connector, - a voltage in the range from 0 to 3.2 V between the diagnosed contact and the common contact «C» indicates the closed state of the corresponding contact.

Timing charts and operation description

The ATSU has 2 operating modes: manual and automatic. By default, the ATSU is switched on in the manual mode.
In the automatic and manual ATSU operation modes, background control of the parameters of the inputs and switching devices is carried out. The voltage is measured separately for each phase of each input.
The decision about the input readiness is made under the following conditions:
- the voltage of each input phase does not exceed the value of the difference of setpoint U_{max} and the hysteresis value (U_h) for a time greater than the setpoint value $t_{trip\ u.\ max}$;
- the voltage of each input phase is not less than the sum of the setpoint Umin and the hysteresis value (U_h) for a time greater than $t_{trip\ u.\ min}$
- the voltage difference between the input phases does not exceed the setpoint value Uas for a time greater than the setpoint value $t_{trip\ as.\ ph.}$
- in the presence of input phase alternation during the setpoint time $t_{trip\ a.\ ph}$.

Timing diagram of ATSU operation in AUTO mode with the preset INPUT 2 value of Mains using the example of voltage loss on Input 1

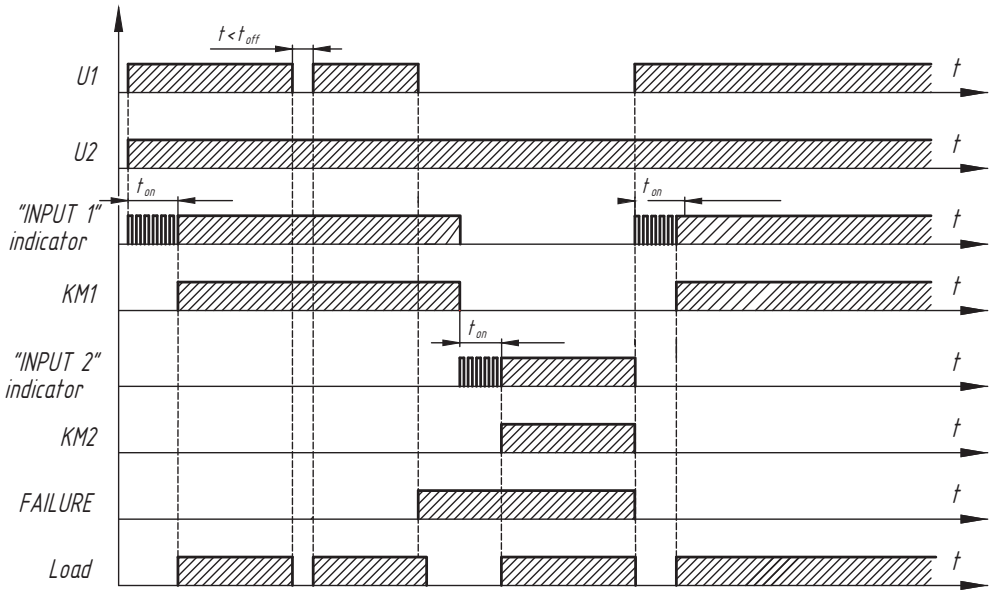

Timing diagram of ATSU operation in AUTO mode with the preset INPUT 2 value of Generator using the example of voltage loss on Input 1

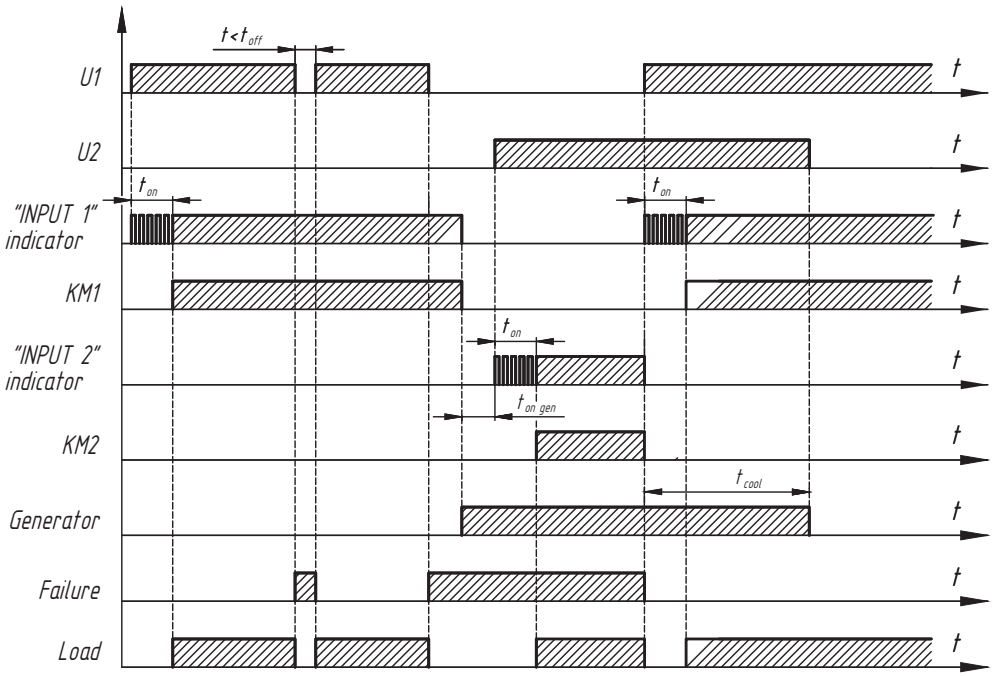

The decision about the failure of the switching device (SD) is made when the SD status changes without the ATSU issuing controlling actions. The ATSU in the automatic mode does not restore the SD's health attribute without the operator's intervention. After the SD failure causes have been eliminated, error reset must be performed in the ATSU menu. In case of the «SD Deleted» signal, the ATSU operation algorithm is blocked.

Automatic mode

The ATSU is switched to the automatic mode by pressing the «AUTO» button for 5 seconds (the corresponding LED will light up). The logic of the ATSU operation in AUTO mode depends on the following settings:

INPUT priority. If there is a priority, the ATSU checks the readiness of the priority INPUT. If this INPUT is ready, the ATSU turns on the corresponding SD. Otherwise, the ATSU sets the failure attribute, turns off the priority INPUT SD and waits for the standby INPUT to become ready for turning on the standby INPUT SD and connect the priority load.

If the user has not set the INPUT's priority, the ATSU does not attempt to switch the load to the priority INPUT when switching to the «AUTO» mode. If both INPUTS are operational and ready at this moment of time and no SD is switched on, ATSU will connect the load to INPUT 1. Otherwise, the ready and operational INPUT will remain connected.

INPUT 2 type. There are 2 configurable options for INPUT 2 — Mains and Generator. In the «Mains» mode, INPUT 2 behaves symmetrically to INPUT 1. In the «generator» mode, the ATSU controls the start and stop of the generator, handles the time settings. The generator is started by closing the «dry» contact of connector X22. The generator is stopped by opening the «dry» contact of connector X22. The ATSU counts the generator warm-up time, generator cooling time, controls the output voltage, gives or removes the generator on/off commands and controls the SD of the corresponding INPUT.

Presence of non-priority load. The user can indicate the presence of a non-priority load and the INPUT to which it is connected. If there is a non-priority load, the corresponding load SD is switched on/off symmetrically with the selected input.

WARNING! If INPUT priority is specified, and a there is a non-priority load indicated to be present on the standby INPUT, the non-priority load SD will never turn on, since, in accordance with the ATSU operation logic, when a load is connected to the reserve INPUT, the non-priority load must be disconnected!

Manual mode

Switching to manual mode is done by pressing the «AUTO» button when the automatic mode is active or via Modbus protocol. During this switching, the power supply parameters are monitored. The manual mode is used to switch on the selected input directly using the front panel buttons «Q1» or «Q2» and to switch on the generator using the button «G»

.

INPUT recovery in manual mode can be done under the following conditions:
- «Recover input in manual mode» is enabled in the ATSU settings;
- the INPUT is operational and ready (green LED is on);
- the switching device of the corresponding INPUT is operational.

Recovery occurs while button «Q1» or «Q2» respectively is held down for more than 2 seconds.
WARNING! Simultaneous switching on of switching devices is impossible to eliminate short-circuit. When the switching device is turned on, a check is made for the status of the opposite switching device and, if necessary, it is turned off.

Resetting errors and alarms

If necessary, the errors and accidents that occurred during the operation of the ATS can be reset from the appropriate menu of the ATSU.

Indication

Operation modes are indicated by an LCD indicator and LED indicators both in automatic mode and in manual control mode. In the «INPUT 2 - generator» mode and when the generator is off, there is no indication of INPUT 2.

In the normal operating mode in the switched SD state, the LED of the corresponding SD is lit green. In the off state, the SD LED is off. Flashing green LED indicates the process of the SD turning on.

The «FAILURE» Indicator turns on in case of any emergency situation (busbar breakage, phase reversal failure, no voltage, voltage out of the specified range, switching to standby). The «FAILURE» indicator turns off automatically after the normal parameters of the monitored network are restored. Indication of emergency operation modes is shown in the table.

The indication displayed on the front panel can be duplicated by signals on external ATS unit connectors and via Modbus protocol.

№	Failure category	Возможная причина	Способы сигнализации	Способ устранения
1	Malfunction of the three-phase line of one or two inputs	1) unacceptable voltage deviation in the phases; 2) change in phase sequence, emergence of phase asymmetry; 3) breakage of one or more phases; 4) redundancy switching.	1) turning on the LED «U>» or «U <»; 2) flashing of phase indicators «L1», «L2», «L3»; 3) the indicator of the corresponding phase has gone off 4) in all types of faults switching on of the «Failure» LED, closure of the «dry» contact «Failure», switching off of the indicator «Ready», message on the LCD-indicator.	Elimination of the fault in the faulty three-phase line
2	Switching device control	Change in SD status without the ATSU issuing controlling actions	The ATSU recognizes such an SD as faulty and a red LED of the corresponding SD lights up. Switching on of the «Failure» LED, closure of the dry contact «Failure», message on the LCD display.	Elimination of inconsistencies and error resetting through the menu
3	Removing the switching device	«SD removed» signal	Turning on of the LEDs «Failure», «Removed», dry contact «Failure»	Switching device recovery
4	Failure on the line of one or two inputs	short circuit, overload or other emergency situation that caused the circuit breaker to trip and its emergency contacts to close	Flashing red LED of the corresponding SD. Switching on of the «Failure» LED, closure of the dry contact «Failure», switching off of the «Ready» indicator, message on the LCD display	Elimination of the failure and error resetting through the menu

For a more detailed description of the menu, settings and connections of the ATSU, see the operation manual.

Connection diagrams

Recommended connection diagram of electromagnetic switching devices to ATSU

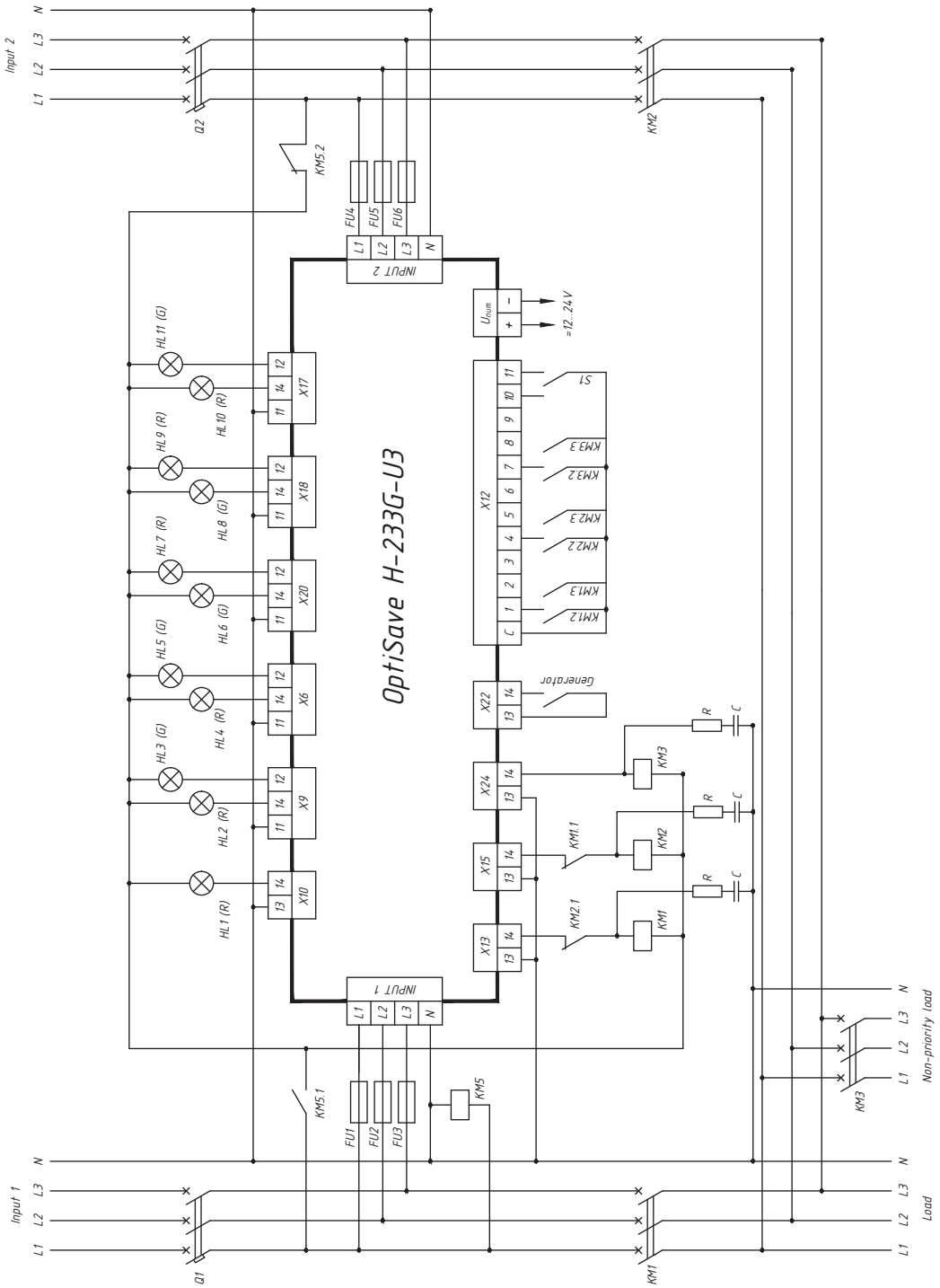

KM1, KM2, KM3 – switching devices (contactors, starters);
KM1.1, KM1.2 – contacts for blocking simultaneous switching on of input SDs
KM1.2, KM2.2, KM3.2 – signaling contacts of switching devices;
KM5 – relays for switching the power supply of external control and signaling devices;
KM5.1, KM5.2 – contacts for blocking simultaneous connection to inputs;
FU1 ... FU6 – fuses;
HL1 – signaling «non-priority load switching device on»;
HL2 – signaling «Switching device of Input 1 on»;
HL3 – signaling «Switching device of Input 1 is off»;
HL4 – signaling «Switching device of Input 2 is on»;
HL5 – signaling «Switching device of Input 2 is off»;
HL6 – signaling «non-priority switching device is on»;
HL7 – signaling «non-priority switching device is off»;
HL8 – signaling «ATSU in automatic mode»;
HL9 – signaling «ATSU in manual mode»;
HL10 – indicator «Normal»;
HL11 – indicator «Failure»;
S1 – front panel locking.

Recommended connection diagram of motor-driven circuit breakers to ATSU

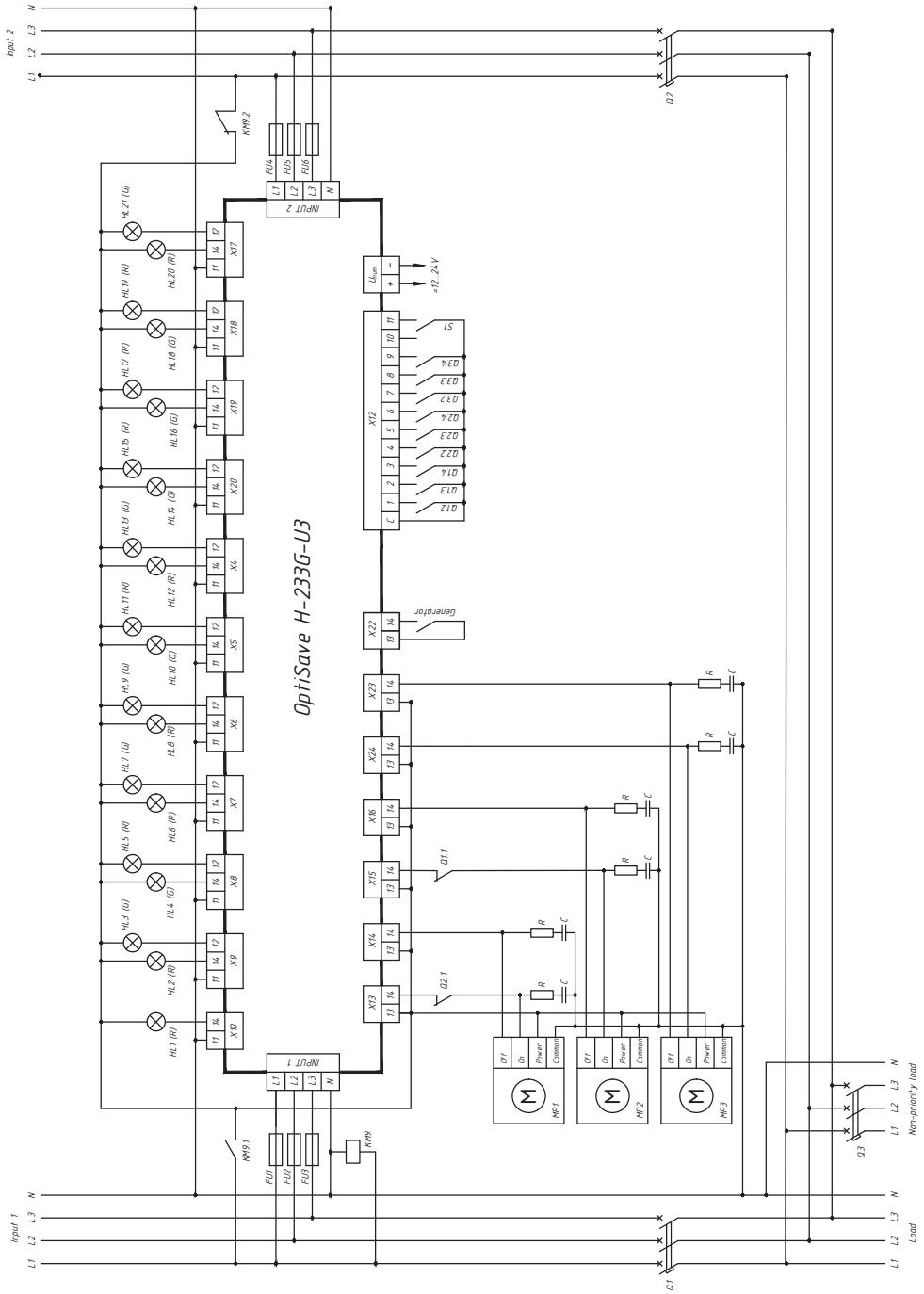

Q1, Q2, Q3, – circuit breakers;
MP1, MP2, MP3 – motor drives for breakers Q1, Q2, Q3;
Q1.1, Q2.1 – contacts for blocking simultaneous switching on of input SDs;
Q1.2, Q2.2, Q3.2 – switching devices status control;
Q1.3, Q2.3, Q3.3 – control of emergency operation of circuit breakers;
Q1.4, Q2.4, Q3.4 – «Removed» status contact;
KM9 – relays for switching the power supply of external control and signaling devices;
KM9.1, KM9.2 – contacts for blocking simultaneous connection to inputs;
FU1 ... FU6 – fuses;
HL1 – signaling «non-priority load switching device is on»;
HL2 – indicator «Switching device of Input 1 is on»;
HL3 – indicator «Input 1 switching device is off»;
HL4 – indicator «Input 1 switching device removed»;
HL5 – indicator «Input 1 switching device installed»;
HL6 – indicator «Input 1 switching device tripped automatically»;
HL7 – indicator «Input 1 switching device in normal mode»;
HL8 – indicator «Input 2 switching device is off»;
HL9 – indicator «Input 2 switching device is off»;
HL10 – indicator «Input 2 switching device removed»;
HL11 – indicator «Input 2 switching device installed»;
HL12 – indicator «Input 2 switching device tripped automatically»;
HL13 – indicator «Input 2 switching device in normal mode»;
HL14 – indicator «non-priority switching device is on»;
HL15 – indicator «non-priority switching device is off»;
HL16 – indicator «non-priority switching device removed»;
HL17 – indicator «non-priority switching device installed»;
HL18 – indicator «ATSU in auto mode»;
HL19 – indicator «ATSU in manual mode»;
HL20 – «Failure» indicator;
HL21 – «Normal» indicator;
S1 – front panel locking.

Recommended connection diagram of electromagnetic-driven circuit breakers to ATSU

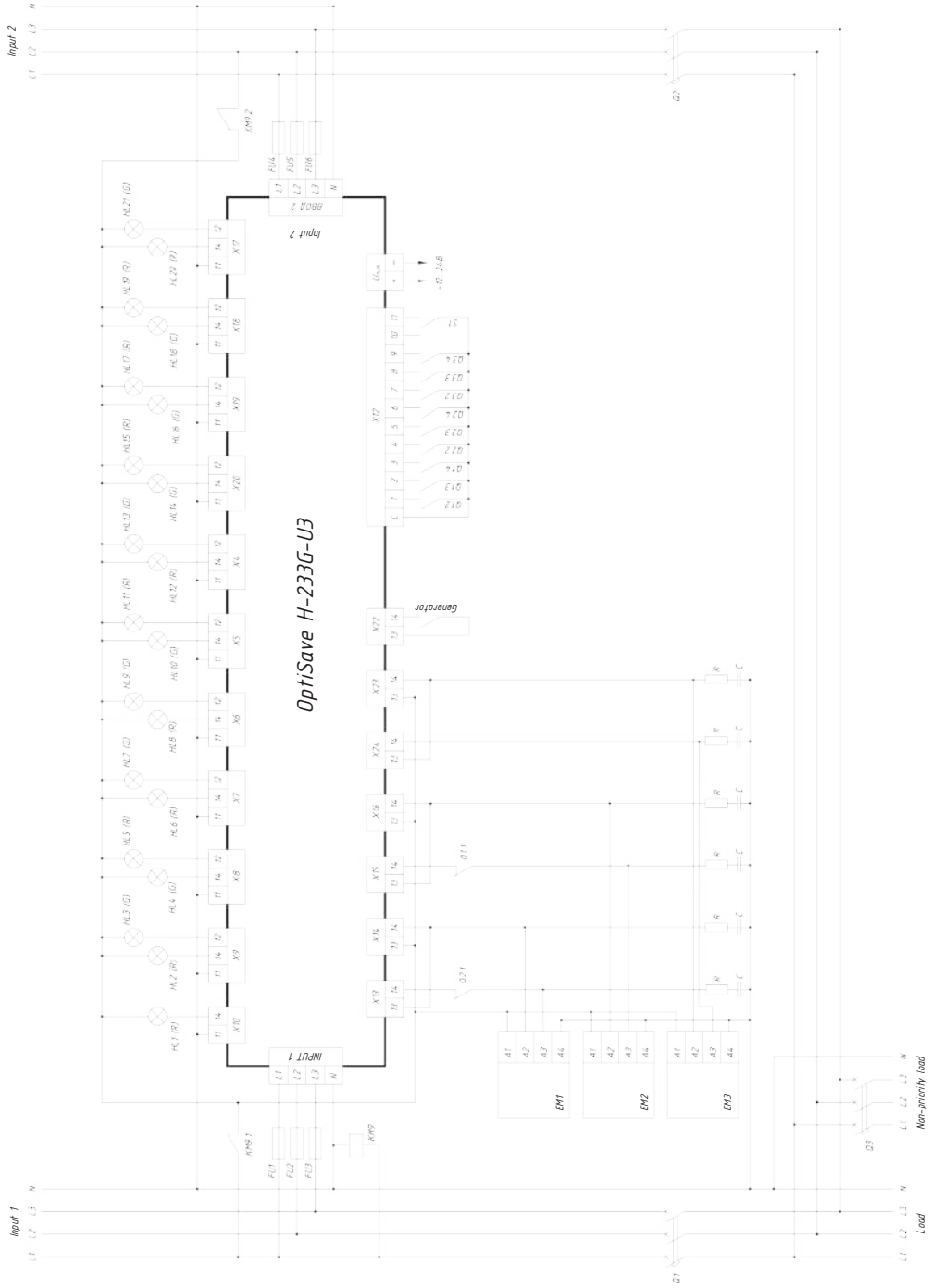

Q1, Q2, Q3, – automatic circuit breakers;
EM1, EM2, EM3 – electromagnetic drives of breakers Q1, Q2, Q3;
Q1.1, Q2.1 – contacts for blocking simultaneous switching on of input SDs;
Q1.2, Q2.2, Q3.2 – switching devices status control;
Q1.3, Q2.3, Q3.3 – control of emergency operation of circuit breakers;
Q1.4, Q2.4, Q3.4 – «Removed» status contact;
S1 – front panel locking;
KM9 – relays for switching the power supply of external control and signaling devices;
KM9.1, KM9.2 – contacts for blocking simultaneous connection to inputs;
FU1 ... FU6 – fuses;
HL1 – signaling «non-priority load switching device on»;
HL2 – indicator «Input 1 switching device is on»;
HL3 – indicator «Input 1 switching device is off»;
HL4 – indicator «Input 1 switching device removed»;
HL5 – indicator «Input 1 switching device installed»;
HL6 – indicator «Input 1 switching device tripped automatically»;
HL7 – indicator «Input 1 switching device in normal mode»;
HL8 – indicator «Input 2 switching device is on»;
HL9 – indicator "Input 2 switching device is off»;
HL10 – indicator «Input 2 switching device removed»;
HL11 – indicator «Input 2 switching device removed»;
HL12 – indicator «Input 2 switching device tripped automatically»;
HL13 – indicator «Input 2 switching device in normal mode»;
HL14 – indicator «non-priority switching device is on»;
HL15 – indicator «non-priority switching device is off»;
HL16 – indicator «non-priority switching device removed»;
HL17 – indicator «non-priority switching device installed»;
HL18 – indicator «ATSU in auto mode»;
HL19 – indicator «ATSU in manual mode»;
HL20 – «Failure» indicator;
HL21 – «Norm» indicator;
S1 – front panel locking.

Overall and connection dimensions (mm)

ATSU design provides for its installation in the 1 to 6 mm thick mounting plate window or on a standard rail using the mounting parts included in the delivery.

Mounting on a TN35 rail in accordance with GOST R IEC 60715

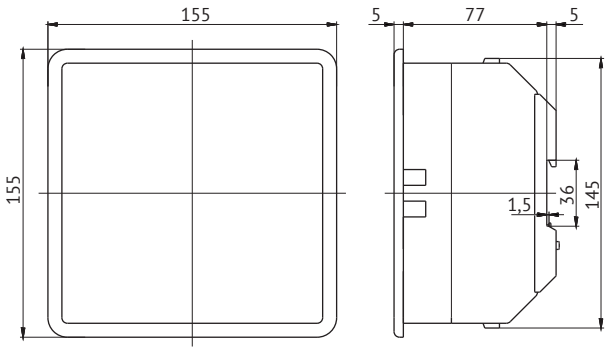

Mounting in a window on a panel

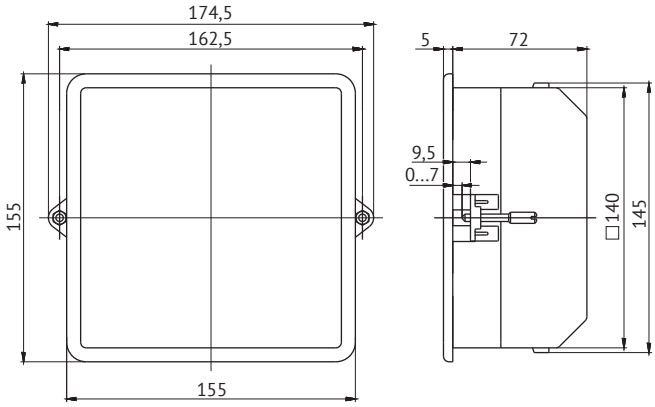

ATSU weight: 0.840 kg

KEAZ switching equipment for the implementation of ready-made solutions

KEAZ offers a wide range of circuit breakers with both electromagnetic and motor drives for building ready-made ATS solutions:

VA57

VA53 and VA55

OptiMat D

OptiMat A

The advantages of the circuit breaker ATS solution include the following:
- option of build a solution in a wide range of rated currents (16 to 4000 A);
- built-in overcurrent protection;
- no power consumption in the ON state.

KEAZ offers various series of contactors for building turnkey ATS solutions:
- PML
- OptiStart K (page 000)
- OptiStart MK (page 000)

ATS contactor systems offer number of advantages:
- simple design;
- high switching speed, which is especially important when powering critical technological processes;
- lower financial costs for implementation in the range of currents up to 250A;
- reliability of contactors compared to motor and electromagnetic drives.

Circuit breaker protection selectivity

Overload selectivity is ensured when the non-tripping time of upstream breaker D1 exceeds the maximum tripping time of breaker D2.
This condition is valid if the ratio between overload protection settings and selective current cut-off is more than 2. The selectivity limit current Is shall be at least equal to the selective current cut-off setting of the upstream device.

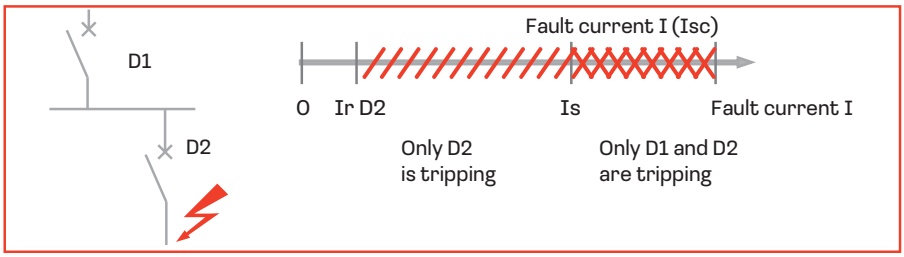

Full or partial selectivity
The expected short-circuit current at point D2 is compared with the selectivity limit current:
complete selectivity: Is > Isc D2; the selectivity is considered complete if for any fault current only circuit breaker D2 is tripping; partial selectivity: Is < Isc D2; the selectivity is considered partial if at fault currents less than Is only circuit breaker D2 is tripping, and if the fault current exceeds Is, both circuit breakers (D1 and D2) are tripping.

Selectivity tables
The selectivity tables indicate whether selectivity between OptiMat circuit breakers is provided or not. The data presented in these tables reflect the results of tests or parameter comparisons for the devices under consideration.

General rules of selectivity

Overload protection

Overload selectivity is ensured if the non-tripping time of upstream circuit breaker D1 exceeds the maximum tripping time of circuit breaker D2. This condition is valid if the ratio between overload protection settings and selective current cut-off is more than 2. The selectivity current limit Is is at least equal to the selective current cutoff setting of the upstream device.

Short circuit protection

Upstream breaker D1 trips with Δt time delay.
- Required current selectivity conditions shall be followed.
- Upstream breaker D1 time delay Δt shall be sufficient for the downstream breaker to rectify the fault.
Time selectivity allows to increase the selectivity current limit Is to the instantaneous current cut-off setting of the upstream device D1.
Selectivity is full, if the D1 breaker:
- belongs to the B category;
- Icw value of breaker D1 = Icu
In other cases, the selectivity is complete when the instantaneous current cut-off setting of the upstream device D1 exceeds the expected short-circuit current Isc at the point where breaker D2 is located.

Protection of low voltage distribution networks

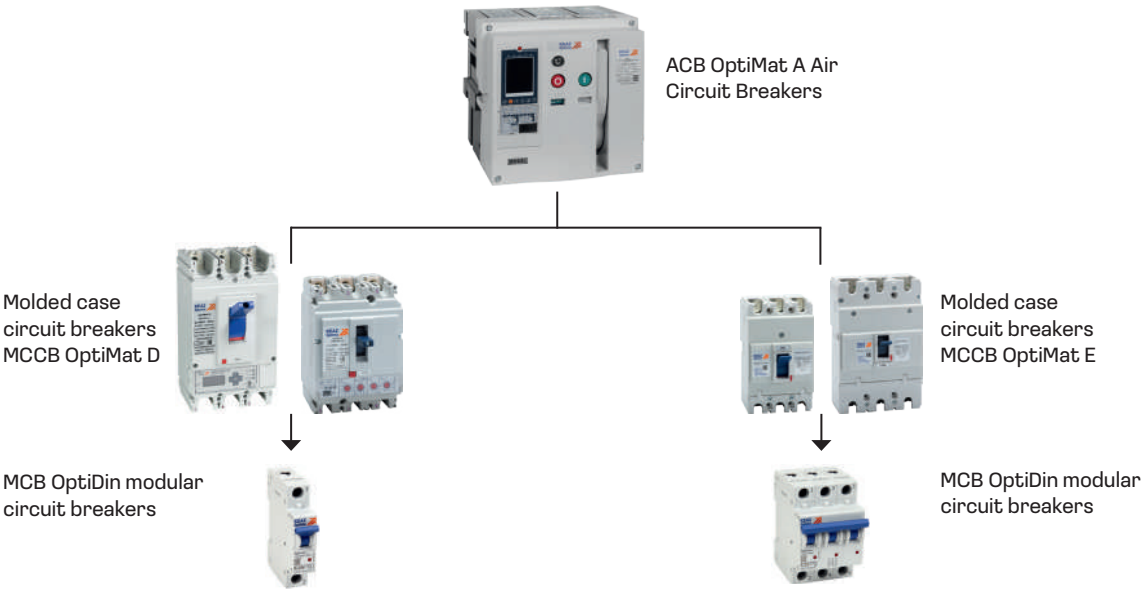

OptiDin BM63

	Upstream device																	
Series	OptiDin BM63 B(3In)																	
OptiDin BM63 B(5In)	In, A		1	2	3	4	5	6	8	10	13	16	20	25	32	40	50	63
		Isd, A	3	6	9	12	15	18	24	30	39	48	60	75	96	120	150	189
	1	5				12	15	18	24	30	39	48	60	75	96	120	150	189
	2	10							24	30	39	48	60	75	96	120	150	189
	3	15								30	39	48	60	75	96	120	150	189
	4	20										48	60	75	96	120	150	189
	5	25											60	75	96	120	150	189
	6	30											60	75	96	120	150	189
	8	40													96	120	150	189
	10	50														120	150	189
	13	65																189
	16	80																189
	20	100																
	25	125																
	32	160																
	40	200																
	50	250																
	63	315																

	Upstream device																	
Series	OptiDin BM63 C(5In)																	
OptiDin BM63 B(5In)	In, A		1	2	3	4	5	6	8	10	13	16	20	25	32	40	50	63
		Isd, A	5	10	15	20	25	30	40	50	65	80	100	125	160	200	250	315
	1	5			15	20	25	30	40	50	65	80	100	125	160	200	250	315
	2	10					25	30	40	50	65	80	100	125	160	200	250	315
	3	15							40	50	65	80	100	125	160	200	250	315
	4	20								50	65	80	100	125	160	200	250	315
	5	25									65	80	100	125	160	200	250	315
	6	30										80	100	125	160	200	250	315
	8	40											100	125	160	200	250	315
	10	50												125	160	200	250	315
	13	65														200	250	315
	16	80														200	250	315
	20	100																315
	25	125																315
	32	160																
	40	200																
	50	250																
	63	315																

	Upstream device																	
Series	OptiDin BM63 D(10In)																	
OptiDin BM63 B(5In)	In, A		1	2	3	4	5	6	8	10	13	16	20	25	32	40	50	63
		Isd, A	10	20	30	40	50	60	80	100	130	160	200	250	320	400	500	630
	1	5			30	40	50	60	80	100	130	160	200	250	320	400	500	630
	2	10					50	60	80	100	130	160	200	250	320	400	500	630
	3	15							80	100	130	160	200	250	320	400	500	630
	4	20								100	130	160	200	250	320	400	500	630
	5	25									130	160	200	250	320	400	500	630
	6	30										160	200	250	320	400	500	630
	8	40											200	250	320	400	500	630
	10	50												250	320	400	500	630
	13	65														400	500	630
	16	80														400	500	630
	20	100																630
	25	125																630
	32	160																
	40	200																
	50	250																
	63	315																

	Upstream device																	
Series	OptiDin BM63 Z(3,2In)																	
OptiDin BM63 B(5In)	In, A		1	2	3	4	5	6	8	10	13	16	20	25	32	40	50	63
		Isd, A	3,2	6,4	9,6	12,8	16	19,2	25,6	32	41,6	51,2	64	80	102,4	128	160	201,6
	1	5				12,8	16	19,2	25,6	32	41,6	51,2	64	80	102,4	128	160	201,6
	2	10							25,6	32	41,6	51,2	64	80	102,4	128	160	201,6
	3	15								32	41,6	51,2	64	80	102,4	128	160	201,6
	4	20									41,6	51,2	64	80	102,4	128	160	201,6
	5	25										51,2	64	80	102,4	128	160	201,6
	6	30											64	80	102,4	128	160	201,6
	8	40												80	102,4	128	160	201,6
	10	50													102,4	128	160	201,6
	13	65																201,6
	16	80																201,6
	20	100																201,6
	25	125																
	32	160																
	40	200																
	50	250																
	63	315																

	Upstream device																	
Series	OptiDin BM63 L(6,4In)																	
OptiDin BM63 B(5In)	In, A		1	2	3	4	5	6	8	10	13	16	20	25	32	40	50	63
		Isd, A	6,4	12,8	19,2	25,6	32	38,4	51,2	64	83,2	102,4	128	160	204,8	256	320	403,2
	1	5			19,2	25,6	32	38,4	51,2	64	83,2	102,4	128	160	204,8	256	320	403,2
	2	10					32	38,4	51,2	64	83,2	102,4	128	160	204,8	256	320	403,2
	3	15							51,2	64	83,2	102,4	128	160	204,8	256	320	403,2
	4	20								64	83,2	102,4	128	160	204,8	256	320	403,2
	5	25									83,2	102,4	128	160	204,8	256	320	403,2
	6	30										102,4	128	160	204,8	256	320	403,2
	8	40											128	160	204,8	256	320	403,2
	10	50												160	204,8	256	320	403,2
	13	65														256	320	403,2
	16	80														256	320	403,2
	20	100																403,2
	25	125																403,2
	32	160																
	40	200																
	50	250																
	63	315																

	Upstream device																	
Series	OptiDin BM63 K(9,6In)																	
OptiDin BM63 B(5In)	In, A		1	2	3	4	5	6	8	10	13	16	20	25	32	40	50	63
		Isd, A	9,6	19,2	28,8	38,4	48	57,6	76,8	96	124,8	153,6	192	240	307,2	384	480	604,8
	1	5			28,8	38,4	48	57,6	76,8	96	124,8	153,6	192	240	307,2	384	480	604,8
	2	10					48	57,6	76,8	96	124,8	153,6	192	240	307,2	384	480	604,8
	3	15							76,8	96	124,8	153,6	192	240	307,2	384	480	604,8
	4	20								96	124,8	153,6	192	240	307,2	384	480	604,8
	5	25									124,8	153,6	192	240	307,2	384	480	604,8
	6	30										153,6	192	240	307,2	384	480	604,8
	8	40											192	240	307,2	384	480	604,8
	10	50												240	307,2	384	480	604,8
	13	65														384	480	604,8
	16	80														384	480	604,8
	20	100																604,8
	25	125																604,8
	32	160																
	40	200																
	50	250																
	63	315																

	Upstream device																	
Series	OptiDin BM63 B(3In)																	
OptiDin BM63 C(10In)	In, A		1	2	3	4	5	6	8	10	13	16	20	25	32	40	50	63
		Isd, A	3	6	9	12	15	18	24	30	39	48	60	75	96	120	150	189
	1	10							24	30	39	48	60	75	96	120	150	189
	2	20										48	60	75	96	120	150	189
	3	30											60	75	96	120	150	189
	4	40													96	120	150	189
	5	50														120	150	189
	6	60														120	150	189
	8	80																189
	10	100																
	13	130																
	16	160																
	20	200																
	25	250																
	32	320																
	40	400																
	50	500																
	63	630																

	Upstream device																	
Series	OptiDin BM63 C(5In)																	
OptiDin BM63 C(10In)	In, A		1	2	3	4	5	6	8	10	13	16	20	25	32	40	50	63
		Isd, A	5	10	15	20	25	30	40	50	65	80	100	125	160	200	250	315
	1	10				20	25	30	40	50	65	80	100	125	160	200	250	315
	2	20							40	50	65	80	100	125	160	200	250	315
	3	30									65	80	100	125	160	200	250	315
	4	40										80	100	125	160	200	250	315
	5	50											100	125	160	200	250	315
	6	60												125	160	200	250	315
	8	80													160	200	250	315
	10	100														200	250	315
	13	130																315
	16	160																
	20	200																
	25	250																
	32	320																
	40	400																
	50	500																
	63	630																

	Upstream device																	
Series	OptiDin BM63 D(10In)																	
OptiDin BM63 C(10In)	In, A		1	2	3	4	5	6	8	10	13	16	20	25	32	40	50	63
		Isd, A	10	20	30	40	50	60	80	100	130	160	200	250	320	400	500	630
	1	10			30	40	50	60	80	100	130	160	200	250	320	400	500	630
	2	20					50	60	80	100	130	160	200	250	320	400	500	630
	3	30							80	100	130	160	200	250	320	400	500	630
	4	40								100	130	160	200	250	320	400	500	630
	5	50									130	160	200	250	320	400	500	630
	6	60										160	200	250	320	400	500	630
	8	80											200	250	320	400	500	630
	10	100												250	320	400	500	630
	13	130														400	500	630
	16	160														400	500	630
	20	200																630
	25	250																630
	32	320																
	40	400																
	50	500																
	63	630																

	Upstream device																	
Series	OptiDin BM63 Z(3,2In)																	
OptiDin BM63 C(10In)	In, A		1	2	3	4	5	6	8	10	13	16	20	25	32	40	50	63
		Isd, A	3,2	6,4	9,6	12,8	16	19,2	25,6	32	41,6	51,2	64	80	102,4	128	160	201,6
	1	10							25,6	32	41,6	51,2	64	80	102,4	128	160	201,6
	2	20									41,6	51,2	64	80	102,4	128	160	201,6
	3	30											64	80	102,4	128	160	201,6
	4	40												80	102,4	128	160	201,6
	5	50													102,4	128	160	201,6
	6	60														128	160	201,6
	8	80																201,6
	10	100																201,6
	13	130																
	16	160																
	20	200																
	25	250																
	32	320																
	40	400																
	50	500																
	63	630																

	Upstream device																	
Series	OptiDin BM63 L(6,4In)																	
OptiDin BM63 C(10In)	In, A		1	2	3	4	5	6	8	10	13	16	20	25	32	40	50	63
		Isd, A	6,4	12,8	19,2	25,6	32	38,4	51,2	64	83,2	102,4	128	160	204,8	256	320	403,2
	1	10				25,6	32	38,4	51,2	64	83,2	102,4	128	160	204,8	256	320	403,2
	2	20							51,2	64	83,2	102,4	128	160	204,8	256	320	403,2
	3	30								64	83,2	102,4	128	160	204,8	256	320	403,2
	4	40									83,2	102,4	128	160	204,8	256	320	403,2
	5	50										102,4	128	160	204,8	256	320	403,2
	6	60											128	160	204,8	256	320	403,2
	8	80												160	204,8	256	320	403,2
	10	100													204,8	256	320	403,2
	13	130																403,2
	16	160																403,2
	20	200																403,2
	25	250																
	32	320																
	40	400																
	50	500																
	63	630																

	Upstream device																	
Series	OptiDin BM63 K(9,6In)																	
OptiDin BM63 C(10In)	In, A		1	2	3	4	5	6	8	10	13	16	20	25	32	40	50	63
		Isd, A	9,6	19,2	28,8	38,4	48	57,6	76,8	96	124,8	153,6	192	240	307,2	384	480	604,8
	1	10			28,8	38,4	48	57,6	76,8	96	124,8	153,6	192	240	307,2	384	480	604,8
	2	20					48	57,6	76,8	96	124,8	153,6	192	240	307,2	384	480	604,8
	3	30							76,8	96	124,8	153,6	192	240	307,2	384	480	604,8
	4	40								96	124,8	153,6	192	240	307,2	384	480	604,8
	5	50									124,8	153,6	192	240	307,2	384	480	604,8
	6	60										153,6	192	240	307,2	384	480	604,8
	8	80											192	240	307,2	384	480	604,8
	10	100												240	307,2	384	480	604,8
	13	130														384	480	604,8
	16	160														384	480	604,8
	20	200																604,8
	25	250																604,8
	32	320																
	40	400																
	50	500																
	63	630																

	Upstream device																	
Series	OptiDin BM63 B(3In)																	
OptiDin BM63 D(20In)	In, A		1	2	3	4	5	6	8	10	13	16	20	25	32	40	50	63
		Isd, A	3	6	9	12	15	18	24	30	39	48	60	75	96	120	150	189
	1	20										48	60	75	96	120	150	189
	2	40													96	120	150	189
	3	60														120	150	189
	4	80																189
	5	100																
	6	120																
	8	160																
	10	200																
	13	260																
	16	320																
	20	400																
	25	500																
	32	640																
	40	800																
	50	1000																
	63	1260																

	Upstream device																	
Series	OptiDin BM63 C(5In)																	
OptiDin BM63 D(20In)	In, A		1	2	3	4	5	6	8	10	13	16	20	25	32	40	50	63
		Isd, A	5	10	15	20	25	30	40	50	65	80	100	125	160	200	250	315
	1	20							40	50	65	80	100	125	160	200	250	315
	2	40										80	100	125	160	200	250	315
	3	60												125	160	200	250	315
	4	80													160	200	250	315
	5	100														200	250	315
	6	120																315
	8	160																
	10	200																
	13	260																
	16	320																
	20	400																
	25	500																
	32	640																
	40	800																
	50	1000																
	63	1260																

	Upstream device																	
Series	OptiDin BM63 D(10In)																	
OptiDin BM63 D(20In)	In, A		1	2	3	4	5	6	8	10	13	16	20	25	32	40	50	63
		Isd, A	10	20	30	40	50	60	80	100	130	160	200	250	320	400	500	630
	1	20				40	50	60	80	100	130	160	200	250	320	400	500	630
	2	40							80	100	130	160	200	250	320	400	500	630
	3	60									130	160	200	250	320	400	500	630
	4	80										160	200	250	320	400	500	630
	5	100											200	250	320	400	500	630
	6	120												250	320	400	500	630
	8	160													320	400	500	630
	10	200														400	500	630
	13	260																630
	16	320																
	20	400																
	25	500																
	32	640																
	40	800																
	50	1000																
	63	1260																

	Upstream device																	
Series	OptiDin BM63 Z(3,2In)																	
OptiDin BM63 D(20In)	In, A		1	2	3	4	5	6	8	10	13	16	20	25	32	40	50	63
		Isd, A	3,2	6,4	9,6	12,8	16	19,2	25,6	32	41,6	51,2	64	80	102,4	128	160	201,6
	1	20									41,6	51,2	64	80	102,4	128	160	201,6
	2	40												80	102,4	128	160	201,6
	3	60														128	160	201,6
	4	80																201,6
	5	100																201,6
	6	120																
	8	160																
	10	200																
	13	260																
	16	320																
	20	400																
	25	500																
	32	640																
	40	800																
	50	1000																
	63	1260																

	Upstream device																	
Series	OptiDin BM63 L(6,4In)																	
OptiDin BM63 D(20In)	In, A		1	2	3	4	5	6	8	10	13	16	20	25	32	40	50	63
		Isd, A	6,4	12,8	19,2	25,6	32	38,4	51,2	64	83,2	102,4	128	160	204,8	256	320	403,2
	1	20							51,2	64	83,2	102,4	128	160	204,8	256	320	403,2
	2	40									83,2	102,4	128	160	204,8	256	320	403,2
	3	60											128	160	204,8	256	320	403,2
	4	80												160	204,8	256	320	403,2
	5	100													204,8	256	320	403,2
	6	120														256	320	403,2
	8	160																403,2
	10	200																403,2
	13	260																
	16	320																
	20	400																
	25	500																
	32	640																
	40	800																
	50	1000																
	63	1260																

	Upstream device																	
Series	OptiDin BM63 K(9,6In)																	
OptiDin BM63 D(20In)	In, A		1	2	3	4	5	6	8	10	13	16	20	25	32	40	50	63
		Isd, A	9,6	19,2	28,8	38,4	48	57,6	76,8	96	124,8	153,6	192	240	307,2	384	480	604,8
	1	20					48	57,6	76,8	96	124,8	153,6	192	240	307,2	384	480	604,8
	2	40								96	124,8	153,6	192	240	307,2	384	480	604,8
	3	60									124,8	153,6	192	240	307,2	384	480	604,8
	4	80											192	240	307,2	384	480	604,8
	5	100												240	307,2	384	480	604,8
	6	120												240	307,2	384	480	604,8
	8	160														384	480	604,8
	10	200																604,8
	13	260																604,8
	16	320																
	20	400																
	25	500																
	32	640																
	40	800																
	50	1000																
	63	1260																

	Upstream device																	
Series	OptiDin BM63 B(3In)																	
OptiDin BM63 Z(4,8In)	In, A		1	2	3	4	5	6	8	10	13	16	20	25	32	40	50	63
		Isd, A	3	6	9	12	15	18	24	30	39	48	60	75	96	120	150	189
	1	4,8				12	15	18	24	30	39	48	60	75	96	120	150	189
	2	9,6							24	30	39	48	60	75	96	120	150	189
	3	14,4								30	39	48	60	75	96	120	150	189
	4	19,2									39	48	60	75	96	120	150	189
	5	24										48	60	75	96	120	150	189
	6	28,8											60	75	96	120	150	189
	8	38,4													96	120	150	189
	10	48													96	120	150	189
	13	62,4																189
	16	76,8																189
	20	96																
	25	120																
	32	153,6																
	40	192																
	50	240																
	63	302,4																

	Upstream device																	
Series	OptiDin BM63 C(5In)																	
OptiDin BM63 Z(4,8In)	In, A		1	2	3	4	5	6	8	10	13	16	20	25	32	40	50	63
		Isd, A	5	10	15	20	25	30	40	50	65	80	100	125	160	200	250	315
	1	4,8			15	20	25	30	40	50	65	80	100	125	160	200	250	315
	2	9,6					25	30	40	50	65	80	100	125	160	200	250	315
	3	14,4							40	50	65	80	100	125	160	200	250	315
	4	19,2								50	65	80	100	125	160	200	250	315
	5	24									65	80	100	125	160	200	250	315
	6	28,8										80	100	125	160	200	250	315
	8	38,4											100	125	160	200	250	315
	10	48												125	160	200	250	315
	13	62,4														200	250	315
	16	76,8														200	250	315
	20	96																315
	25	120																315
	32	153,6																
	40	192																
	50	240																
	63	302,4																

	Upstream device																	
Series	OptiDin BM63 D(10In)																	
OptiDin BM63 Z(4,8In)	In, A		1	2	3	4	5	6	8	10	13	16	20	25	32	40	50	63
		Isd, A	10	20	30	40	50	60	80	100	130	160	200	250	320	400	500	630
	1	4,8			30	40	50	60	80	100	130	160	200	250	320	400	500	630
	2	9,6					50	60	80	100	130	160	200	250	320	400	500	630
	3	14,4							80	100	130	160	200	250	320	400	500	630
	4	19,2								100	130	160	200	250	320	400	500	630
	5	24									130	160	200	250	320	400	500	630
	6	28,8										160	200	250	320	400	500	630
	8	38,4											200	250	320	400	500	630
	10	48												250	320	400	500	630
	13	62,4														400	500	630
	16	76,8														400	500	630
	20	96																630
	25	120																630
	32	153,6																
	40	192																
	50	240																
	63	302,4																

	Upstream device																	
Series	OptiDin BM63 Z(3,2In)																	
OptiDin BM63 Z(4,8In)	In, A		1	2	3	4	5	6	8	10	13	16	20	25	32	40	50	63
		Isd, A	3,2	6,4	9,6	12,8	16	19,2	25,6	32	41,6	51,2	64	80	102,4	128	160	201,6
	1	4,8			9,6	12,8	16	19,2	25,6	32	41,6	51,2	64	80	102,4	128	160	201,6
	2	9,6						19,2	25,6	32	41,6	51,2	64	80	102,4	128	160	201,6
	3	14,4								32	41,6	51,2	64	80	102,4	128	160	201,6
	4	19,2									41,6	51,2	64	80	102,4	128	160	201,6
	5	24										51,2	64	80	102,4	128	160	201,6
	6	28,8											64	80	102,4	128	160	201,6
	8	38,4												80	102,4	128	160	201,6
	10	48													102,4	128	160	201,6
	13	62,4														128	160	201,6
	16	76,8																201,6
	20	96																201,6
	25	120																
	32	153,6																
	40	192																
	50	240																
	63	302,4																

	Upstream device																	
Series	OptiDin BM63 L(6,4In)																	
OptiDin BM63 Z(4,8In)	In, A		1	2	3	4	5	6	8	10	13	16	20	25	32	40	50	63
		Isd, A	6,4	12,8	19,2	25,6	32	38,4	51,2	64	83,2	102,4	128	160	204,8	256	320	403,2
	1	4,8			19,2	25,6	32	38,4	51,2	64	83,2	102,4	128	160	204,8	256	320	403,2
	2	9,6					32	38,4	51,2	64	83,2	102,4	128	160	204,8	256	320	403,2
	3	14,4							51,2	64	83,2	102,4	128	160	204,8	256	320	403,2
	4	19,2								64	83,2	102,4	128	160	204,8	256	320	403,2
	5	24									83,2	102,4	128	160	204,8	256	320	403,2
	6	28,8										102,4	128	160	204,8	256	320	403,2
	8	38,4											128	160	204,8	256	320	403,2
	10	48												160	204,8	256	320	403,2
	13	62,4														256	320	403,2
	16	76,8														256	320	403,2
	20	96																403,2
	25	120																403,2
	32	153,6																
	40	192																
	50	240																
	63	302,4																

	Upstream device																	
Series	OptiDin BM63 K(9,6In)																	
OptiDin BM63 Z(4,8In)	In, A		1	2	3	4	5	6	8	10	13	16	20	25	32	40	50	63
		Isd, A	9,6	19,2	28,8	38,4	48	57,6	76,8	96	124,8	153,6	192	240	307,2	384	480	604,8
	1	4,8			28,8	38,4	48	57,6	76,8	96	124,8	153,6	192	240	307,2	384	480	604,8
	2	9,6					48	57,6	76,8	96	124,8	153,6	192	240	307,2	384	480	604,8
	3	14,4							76,8	96	124,8	153,6	192	240	307,2	384	480	604,8
	4	19,2								96	124,8	153,6	192	240	307,2	384	480	604,8
	5	24									124,8	153,6	192	240	307,2	384	480	604,8
	6	28,8										153,6	192	240	307,2	384	480	604,8
	8	38,4											192	240	307,2	384	480	604,8
	10	48												240	307,2	384	480	604,8
	13	62,4														384	480	604,8
	16	76,8														384	480	604,8
	20	96																604,8
	25	120																604,8
	32	153,6																
	40	192																
	50	240																
	63	302,4																

	Upstream device																	
Series	OptiDin BM63 B(3In)																	
OptiDin BM63 L(9,6In)	In, A		1	2	3	4	5	6	8	10	13	16	20	25	32	40	50	63
		Isd, A	3	6	9	12	15	18	24	30	39	48	60	75	96	120	150	189
	1	9,6							24	30	39	48	60	75	96	120	150	189
	2	19,2									39	48	60	75	96	120	150	189
	3	28,8											60	75	96	120	150	189
	4	38,4													96	120	150	189
	5	48													96	120	150	189
	6	57,6														120	150	189
	8	76,8																189
	10	96																
	13	124,8																
	16	153,6																
	20	192																
	25	240																
	32	307,2																
	40	384																
	50	480																
	63	604,8																

	Upstream device																	
Series	OptiDin BM63 C(5In)																	
OptiDin BM63 L(9,6In)	In, A		1	2	3	4	5	6	8	10	13	16	20	25	32	40	50	63
		Isd, A	5	10	15	20	25	30	40	50	65	80	100	125	160	200	250	315
	1	9,6				20	25	30	40	50	65	80	100	125	160	200	250	315
	2	19,2							40	50	65	80	100	125	160	200	250	315
	3	28,8									65	80	100	125	160	200	250	315
	4	38,4										80	100	125	160	200	250	315
	5	48											100	125	160	200	250	315
	6	57,6												125	160	200	250	315
	8	76,8													160	200	250	315
	10	96														200	250	315
	13	124,8																315
	16	153,6																315
	20	192																
	25	240																
	32	307,2																
	40	384																
	50	480																
	63	604,8																

	Upstream device																	
Series	OptiDin BM63 D(10In)																	
OptiDin BM63 L(9,6In)	In, A		1	2	3	4	5	6	8	10	13	16	20	25	32	40	50	63
		Isd, A	10	20	30	40	50	60	80	100	130	160	200	250	320	400	500	630
	1	9,6			30	40	50	60	80	100	130	160	200	250	320	400	500	630
	2	19,2					50	60	80	100	130	160	200	250	320	400	500	630
	3	28,8							80	100	130	160	200	250	320	400	500	630
	4	38,4								100	130	160	200	250	320	400	500	630
	5	48									130	160	200	250	320	400	500	630
	6	57,6										160	200	250	320	400	500	630
	8	76,8											200	250	320	400	500	630
	10	96												250	320	400	500	630
	13	124,8														400	500	630
	16	153,6														400	500	630
	20	192																630
	25	240																630
	32	307,2																
	40	384																
	50	480																
	63	604,8																

	Upstream device																	
Series	OptiDin BM63 Z(3,2In)																	
OptiDin BM63 L(9,6In)	In, A		1	2	3	4	5	6	8	10	13	16	20	25	32	40	50	63
		Isd, A	3,2	6,4	9,6	12,8	16	19,2	25,6	32	41,6	51,2	64	80	102,4	128	160	201,6
	1	9,6						19,2	25,6	32	41,6	51,2	64	80	102,4	128	160	201,6
	2	19,2									41,6	51,2	64	80	102,4	128	160	201,6
	3	28,8											64	80	102,4	128	160	201,6
	4	38,4												80	102,4	128	160	201,6
	5	48													102,4	128	160	201,6
	6	57,6														128	160	201,6
	8	76,8																201,6
	10	96																201,6
	13	124,8																
	16	153,6																
	20	192																
	25	240																
	32	307,2																
	40	384																
	50	480																
	63	604,8																

	Upstream device																	
Series	OptiDin BM63 L(6,4In)																	
OptiDin BM63 L(9,6In)	In, A		1	2	3	4	5	6	8	10	13	16	20	25	32	40	50	63
		Isd, A	6,4	12,8	19,2	25,6	32	38,4	51,2	64	83,2	102,4	128	160	204,8	256	320	403,2
	1	9,6			19,2	25,6	32	38,4	51,2	64	83,2	102,4	128	160	204,8	256	320	403,2
	2	19,2						38,4	51,2	64	83,2	102,4	128	160	204,8	256	320	403,2
	3	28,8								64	83,2	102,4	128	160	204,8	256	320	403,2
	4	38,4									83,2	102,4	128	160	204,8	256	320	403,2
	5	48										102,4	128	160	204,8	256	320	403,2
	6	57,6											128	160	204,8	256	320	403,2
	8	76,8												160	204,8	256	320	403,2
	10	96													204,8	256	320	403,2
	13	124,8														256	320	403,2
	16	153,6																403,2
	20	192																403,2
	25	240																
	32	307,2																
	40	384																
	50	480																
	63	604,8																

	Upstream device																	
Series	OptiDin BM63 K(9,6In)																	
OptiDin BM63 L(9,6In)	In, A		1	2	3	4	5	6	8	10	13	16	20	25	32	40	50	63
		Isd, A	9,6	19,2	28,8	38,4	48	57,6	76,8	96	124,8	153,6	192	240	307,2	384	480	604,8
	1	9,6			28,8	38,4	48	57,6	76,8	96	124,8	153,6	192	240	307,2	384	480	604,8
	2	19,2					48	57,6	76,8	96	124,8	153,6	192	240	307,2	384	480	604,8
	3	28,8							76,8	96	124,8	153,6	192	240	307,2	384	480	604,8
	4	38,4								96	124,8	153,6	192	240	307,2	384	480	604,8
	5	48									124,8	153,6	192	240	307,2	384	480	604,8
	6	57,6										153,6	192	240	307,2	384	480	604,8
	8	76,8											192	240	307,2	384	480	604,8
	10	96												240	307,2	384	480	604,8
	13	124,8														384	480	604,8
	16	153,6														384	480	604,8
	20	192																604,8
	25	240																604,8
	32	307,2																
	40	384																
	50	480																
	63	604,8																

	Upstream device																	
Series	OptiDin BM63 B(3In)																	
OptiDin BM63 K(14,4In)	In, A		1	2	3	4	5	6	8	10	13	16	20	25	32	40	50	63
		Isd, A	3	6	9	12	15	18	24	30	39	48	60	75	96	120	150	189
	1	14,4								30	39	48	60	75	96	120	150	189
	2	28,8											60	75	96	120	150	189
	3	43,2													96	120	150	189
	4	57,6														120	150	189
	5	72																189
	6	86,4																189
	8	115,2																
	10	144																
	13	187,2																
	16	230,4																
	20	288																
	25	360																
	32	460,8																
	40	576																
	50	720																
	63	907,2																

	Upstream device																	
Series	OptiDin BM63 C(5In)																	
OptiDin BM63 K(14,4In)	In, A		1	2	3	4	5	6	8	10	13	16	20	25	32	40	50	63
		Isd, A	5	10	15	20	25	30	40	50	65	80	100	125	160	200	250	315
	1	14,4						30	40	50	65	80	100	125	160	200	250	315
	2	28,8									65	80	100	125	160	200	250	315
	3	43,2											100	125	160	200	250	315
	4	57,6												125	160	200	250	315
	5	72													160	200	250	315
	6	86,4														200	250	315
	8	115,2																315
	10	144																315
	13	187,2																
	16	230,4																
	20	288																
	25	360																
	32	460,8																
	40	576																
	50	720																
	63	907,2																

	Upstream device																	
Series	OptiDin BM63 D(10In)																	
OptiDin BM63 K(14,4In)	In, A		1	2	3	4	5	6	8	10	13	16	20	25	32	40	50	63
		Isd, A	10	20	30	40	50	60	80	100	130	160	200	250	320	400	500	630
	1	14,4			30	40	50	60	80	100	130	160	200	250	320	400	500	630
	2	28,8						60	80	100	130	160	200	250	320	400	500	630
	3	43,2								100	130	160	200	250	320	400	500	630
	4	57,6									130	160	200	250	320	400	500	630
	5	72										160	200	250	320	400	500	630
	6	86,4											200	250	320	400	500	630
	8	115,2												250	320	400	500	630
	10	144													320	400	500	630
	13	187,2														400	500	630
	16	230,4																630
	20	288																630
	25	360																
	32	460,8																
	40	576																
	50	720																
	63	907,2																

	Upstream device																	
Series	OptiDin BM63 Z(3,2In)																	
OptiDin BM63 K(14,4In)	In, A		1	2	3	4	5	6	8	10	13	16	20	25	32	40	50	63
		Isd, A	3,2	6,4	9,6	12,8	16	19,2	25,6	32	41,6	51,2	64	80	102,4	128	160	201,6
	1	14,4								32	41,6	51,2	64	80	102,4	128	160	201,6
	2	28,8											64	80	102,4	128	160	201,6
	3	43,2													102,4	128	160	201,6
	4	57,6														128	160	201,6
	5	72																201,6
	6	86,4																201,6
	8	115,2																
	10	144																
	13	187,2																
	16	230,4																
	20	288																
	25	360																
	32	460,8																
	40	576																
	50	720																
	63	907,2																

	Upstream device																	
Series	OptiDin BM63 L(6,4In)																	
OptiDin BM63 K(14,4In)	In, A		1	2	3	4	5	6	8	10	13	16	20	25	32	40	50	63
		Isd, A	6,4	12,8	19,2	25,6	32	38,4	51,2	64	83,2	102,4	128	160	204,8	256	320	403,2
	1	14,4					32	38,4	51,2	64	83,2	102,4	128	160	204,8	256	320	403,2
	2	28,8								64	83,2	102,4	128	160	204,8	256	320	403,2
	3	43,2										102,4	128	160	204,8	256	320	403,2
	4	57,6											128	160	204,8	256	320	403,2
	5	72												160	204,8	256	320	403,2
	6	86,4													204,8	256	320	403,2
	8	115,2														256	320	403,2
	10	144																403,2
	13	187,2																403,2
	16	230,4																
	20	288																
	25	360																
	32	460,8																
	40	576																
	50	720																
	63	907,2																

	Upstream device																	
Series	OptiDin BM63 K(9,6In)																	
OptiDin BM63 K(14,4In)	In, A		1	2	3	4	5	6	8	10	13	16	20	25	32	40	50	63
		Isd, A	9,6	19,2	28,8	38,4	48	57,6	76,8	96	124,8	153,6	192	240	307,2	384	480	604,8
	1	14,4			28,8	38,4	48	57,6	76,8	96	124,8	153,6	192	240	307,2	384	480	604,8
	2	28,8						57,6	76,8	96	124,8	153,6	192	240	307,2	384	480	604,8
	3	43,2								96	124,8	153,6	192	240	307,2	384	480	604,8
	4	57,6									124,8	153,6	192	240	307,2	384	480	604,8
	5	72										153,6	192	240	307,2	384	480	604,8
	6	86,4											192	240	307,2	384	480	604,8
	8	115,2												240	307,2	384	480	604,8
	10	144													307,2	384	480	604,8
	13	187,2														384	480	604,8
	16	230,4																604,8
	20	288																604,8
	25	360																
	32	460,8																
	40	576																
	50	720																
	63	907,2																

Примечание:

T	Complete selectivity (up to the maximum tripping capacity of the downstream device)
189	Selectivity current limit
	Selectivity not ensured

OptiDin BM125 - OptiDin BM63

Series	Upstream device				
	OptiDin BM125 8In				
OptiDin BM125 8In	In, A		80	100	125
		Isd, A	640	800	1000
	80	640			
	100	800			
	125	1000			

Series	Upstream device				
	OptiDin BM125 14In				
OptiDin BM125 8In	In, A		80	100	125
		Isd, A	1120	1400	1750
	80	640			
	100	800			
	125	1000			

Series	Upstream device				
	OptiDin BM125 8In				
OptiDin BM125 14In	In, A		80	100	125
		Isd, A	640	800	1000
	80	1120			
	100	1400			
	125	1750			

Series	Upstream device				
	OptiDin BM125 14In				
OptiDin BM125 14In	In, A		80	100	125
		Isd, A	1120	1400	1750
	80	1120			
	100	1400			
	125	1750			

Примечание:

T	Complete selectivity (up to the maximum tripping capacity of the downstream device)
189	Selectivity current limit
	Selectivity not ensured

Series	Upstream device				
	OptiDin BM125 8In				
OptiDin BM63 B (5In)	In, A		80	100	125
		Isd, A	640	800	1000
	1	5	512	640	800
	2	10	512	640	800
	3	15	512	640	800
	4	20	512	640	800
	5	25	512	640	800
	6	30	512	640	800
	8	40	512	640	800
	10	50	512	640	800
	13	65	512	640	800
	16	80	512	640	800
	20	100	512	640	800
	25	125	512	640	800
	32	160	512	640	800
	40	200		640	800
	50	250			800
	63	315			

Series	Upstream device				
	OptiDin BM125 14In				
OptiDin BM63 B (5In)	In, A		80	100	125
		Isd, A	1120	1400	1750
	1	5	896	1120	1400
	2	10	896	1120	1400
	3	15	896	1120	1400
	4	20	896	1120	1400
	5	25	896	1120	1400
	6	30	896	1120	1400
	8	40	896	1120	1400
	10	50	896	1120	1400
	13	65	896	1120	1400
	16	80	896	1120	1400
	20	100	896	1120	1400
	25	125	896	1120	1400
	32	160	896	1120	1400
	40	200	896	1120	1400
	50	250		1120	1400
	63	315			1400

Series	Upstream device				
	OptiDin BM125 8In				
OptiDin BM63 C(10In)	In, A		80	100	125
		Isd, A	640	800	1000
	1	10	512	640	800
	2	20	512	640	800
	3	30	512	640	800
	4	40	512	640	800
	5	50	512	640	800
	6	60	512	640	800
	8	80	512	640	800
	10	100	512	640	800
	13	130	512	640	800
	16	160	512	640	800
	20	200	512	640	800
	25	250	512	640	800
	32	320	512	640	800
	40	400		640	800
	50	500			800
	63	630			

Series	Upstream device				
	OptiDin BM125 14In				
OptiDin BM63 C(10In)	In, A		80	100	125
		Isd, A	1120	1400	1750
	1	10	896	1120	1400
	2	20	896	1120	1400
	3	30	896	1120	1400
	4	40	896	1120	1400
	5	50	896	1120	1400
	6	60	896	1120	1400
	8	80	896	1120	1400
	10	100	896	1120	1400
	13	130	896	1120	1400
	16	160	896	1120	1400
	20	200	896	1120	1400
	25	250	896	1120	1400
	32	320	896	1120	1400
	40	400		1120	1400
	50	500			1400
	63	630			

Series	Upstream device				
	OptiDin BM125 8In				
OptiDin BM63 D(20In)	In, A		80	100	125
		Isd, A	640	800	1000
	1	20	512	640	800
	2	40	512	640	800
	3	60	512	640	800
	4	80	512	640	800
	5	100	512	640	800
	6	120	512	640	800
	8	160	512	640	800
	10	200	512	640	800
	13	260	512	640	800
	16	320	512	640	800
	20	400		640	800
	25	500			800
	32	640			
	40	800			
	50	1000			
	63	1260			

Series	Upstream device				
	OptiDin BM125 14In				
OptiDin BM63 D(20In)	In, A		80	100	125
		Isd, A	1120	1400	1750
	1	20	896	1120	1400
	2	40	896	1120	1400
	3	60	896	1120	1400
	4	80	896	1120	1400
	5	100	896	1120	1400
	6	120	896	1120	1400
	8	160	896	1120	1400
	10	200	896	1120	1400
	13	260	896	1120	1400
	16	320	896	1120	1400
	20	400	896	1120	1400
	25	500	896	1120	1400
	32	640		1120	1400
	40	800			1400
	50	1000			
	63	1260			

Series	Upstream device				
	OptiDin BM125 8In				
OptiDin BM63 Z(4,8In)	In, A		80	100	125
		Isd, A	640	800	1000
	1	4,8	512	640	800
	2	9,6	512	640	800
	3	14,4	512	640	800
	4	19,2	512	640	800
	5	24	512	640	800
	6	28,8	512	640	800
	8	38,4	512	640	800
	10	48	512	640	800
	13	62,4	512	640	800
	16	76,8	512	640	800
	20	96	512	640	800
	25	120	512	640	800
	32	153,6	512	640	800
	40	192		640	800
	50	240			800
	63	302,4			

Series	Upstream device				
	OptiDin BM125 14In				
OptiDin BM63 Z(4,8In)	In, A		80	100	125
		Isd, A	1120	1400	1750
	1	4,8	896	1120	1400
	2	9,6	896	1120	1400
	3	14,4	896	1120	1400
	4	19,2	896	1120	1400
	5	24	896	1120	1400
	6	28,8	896	1120	1400
	8	38,4	896	1120	1400
	10	48	896	1120	1400
	13	62,4	896	1120	1400
	16	76,8	896	1120	1400
	20	96	896	1120	1400
	25	120	896	1120	1400
	32	153,6	896	1120	1400
	40	192		1120	1400
	50	240			1400
	63	302,4			

Series	Upstream device				
	OptiDin BM125 8In				
OptiDin BM63 L(9,6In)	In, A		80	100	125
		Isd, A	640	800	1000
	1	9,6	512	640	800
	2	19,2	512	640	800
	3	28,8	512	640	800
	4	38,4	512	640	800
	5	48	512	640	800
	6	57,6	512	640	800
	8	76,8	512	640	800
	10	96	512	640	800
	13	124,8	512	640	800
	16	153,6	512	640	800
	20	192	512	640	800
	25	240	512	640	800
	32	307,2	512	640	800
	40	384		640	800
	50	480			800
	63	604,8			

Series	Upstream device				
	OptiDin BM125 14In				
OptiDin BM63 L(9,6In)	In, A		80	100	125
		Isd, A	1120	1400	1750
	1	9,6	896	1120	1400
	2	19,2	896	1120	1400
	3	28,8	896	1120	1400
	4	38,4	896	1120	1400
	5	48	896	1120	1400
	6	57,6	896	1120	1400
	8	76,8	896	1120	1400
	10	96	896	1120	1400
	13	124,8	896	1120	1400
	16	153,6	896	1120	1400
	20	192	896	1120	1400
	25	240	896	1120	1400
	32	307,2	896	1120	1400
	40	384		1120	1400
	50	480			1400
	63	604,8			

Series	Upstream device				
	OptiDin BM125 8In				
OptiDin BM63 K(14,4In)	In, A		80	100	125
		Isd, A	640	800	1000
	1	14,4	512	640	800
	2	28,8	512	640	800
	3	43,2	512	640	800
	4	57,6	512	640	800
	5	72	512	640	800
	6	86,4	512	640	800
	8	115,2	512	640	800
	10	144	512	640	800
	13	187,2	512	640	800
	16	230,4	512	640	800
	20	288	512	640	800
	25	360		640	800
	32	460,8			800
	40	576			
	50	720			
	63	907,2			

Series	Upstream device				
	OptiDin BM125 14In				
OptiDin BM63 K(14,4In)	In, A		80	100	125
		Isd, A	1120	1400	1750
	1	14,4	896	1120	1400
	2	28,8	896	1120	1400
	3	43,2	896	1120	1400
	4	57,6	896	1120	1400
	5	72	896	1120	1400
	6	86,4	896	1120	1400
	8	115,2	896	1120	1400
	10	144	896	1120	1400
	13	187,2	896	1120	1400
	16	230,4	896	1120	1400
	20	288	896	1120	1400
	25	360	896	1120	1400
	32	460,8	896	1120	1400
	40	576		1120	1400
	50	720			1400
	63	907,2			

Примечание:
- T — Complete selectivity (up to the maximum tripping capacity of the downstream device)
- 1000 — Selectivity current limit
- Selectivity not ensured

OptiMat D - OptiDin BM125

Series	Upstream device											
	OptiMat D250 N/H (40/65 kA at Ue = 400 V)											
OptiDin BM125 8In	In, A		100	113	125	140	158	175	200	225	238	250
		Isd, A	1000	1130	1250	1400	1580	1750	2000	2250	2380	2500
	80	640							T	T	T	T
	100	800										T
	125	1000										

Series	Upstream device											
	OptiMat D250 N/H (40/65 kA at Ue = 400 V)											
OptiDin BM125 14In	In, A		100	113	125	140	158	175	200	225	238	250
		Isd, A	1000	1130	1250	1400	1580	1750	2000	2250	2380	2500
	80	1120							T	T	T	T
	100	1400										T
	125	1750										

Series	Upstream device																					
	OptiMat D630 N/H (40/65 kA at Ue = 400 V)																					
OptiDin BM125 8In	In, A		250	270	290	310	330	350	370	390	410	430	450	470	490	510	530	550	570	590	610	630
		Isd, A	2500	2700	2900	3100	3300	3500	3700	3900	4100	4300	4500	4700	4900	5100	5300	5500	5700	5900	6100	6300
	80	640	T	T	T	T	T	T	T	T	T	T	T	T	T	T	T	T	T	T	T	T
	100	800	T	T	T	T	T	T	T	T	T	T	T	T	T	T	T	T	T	T	T	T
	125	1000					T	T	T	T	T	T	T	T	T	T	T	T	T	T	T	T

Series	Upstream device																					
	OptiMat D630 N/H (40/65 kA at Ue = 400 V)																					
OptiDin BM125 14In	In, A		250	270	290	310	330	350	370	390	410	430	450	470	490	510	530	550	570	590	610	630
		Isd, A	2500	2700	2900	3100	3300	3500	3700	3900	4100	4300	4500	4700	4900	5100	5300	5500	5700	5900	6100	6300
	80	1120	T	T	T	T	T	T	T	T	T	T	T	T	T	T	T	T	T	T	T	T
	100	1400	T	T	T	T	T	T	T	T	T	T	T	T	T	T	T	T	T	T	T	T
	125	1750					T	T	T	T	T	T	T	T	T	T	T	T	T	T	T	T

Примечание:
- T — Complete selectivity (up to the maximum tripping capacity of the downstream device)
- 1000 — Selectivity current limit
- Selectivity not ensured

OptiMat E

	Upstream device														
Series	OptiMat E100 L/N (10/20 kA at Ue = 400 V)											OptiMat E250 L/N/H (18/25/40 kA at Ue = 400 V)			
OptiMat E100 L/N (10/20 kA at Ue = 400 V)	In, A		16	20	25	32	40	50	63	80	100	125	160	200	250
		Isd, A	350	400	400	400	400	500	630	800	1000	1250	1600	2000	2500
	16	350	-1	-1	-1	-1	-1	-1	-1	640	800	1000	1280	1600	2000
	20	400	-1	-1	-1	-1	-1	-1	-1	640	800	1000	1280	1600	2000
	25	400	-1	-1	-1	-1	-1	-1	-1	640	800	1000	1280	1600	2000
	32	400	-1	-1	-1	-1	-1	-1	-1	640	800	1000	1280	1600	2000
	40	400	-1	-1	-1	-1	-1	-1	-1	-1	800	1000	1280	1600	2000
	50	500	-1	-1	-1	-1	-1	-1	-1	-1	-1	1000	1280	1600	2000
	63	630	-1	-1	-1	-1	-1	-1	-1	-1	-1	-1	1280	1600	2000
	80	800	-1	-1	-1	-1	-1	-1	-1	-1	-1	-1	-1	1600	2000
	100	1000	-1	-1	-1	-1	-1	-1	-1	-1	-1	-1	-1	-1	2000
OptiMat E250 L/N/H (18/25/40 kA at Ue = 400 V)	125	1250	-1	-1	-1	-1	-1	-1	-1	-1	-1	-1	-1	-1	-1
	160	1600	-1	-1	-1	-1	-1	-1	-1	-1	-1	-1	-1	-1	-1
	200	2000	-1	-1	-1	-1	-1	-1	-1	-1	-1	-1	-1	-1	-1
	250	2500	-1	-1	-1	-1	-1	-1	-1	-1	-1	-1	-1	-1	-1

Примечание: 1000 Selectivity current limit Is = 1000 A
Selectivity not ensured

OptiMat E - OptiDin BM63

	Upstream device														
Series	OptiMat E100 L/N (10/20 kA at Ue = 400 V)											OptiMat E250 L/N/H (18/25/40 kA at Ue = 400 V)			
OptiDin BM63 B(5In)	In, A		16	20	25	32	40	50	63	80	100	125	160	200	250
	5	Isd, A	350	400	400	400	400	500	630	800	1000	1250	1600	2000	2500
	1	5	280	320	320	320	320	400	504	640	800	1000	1280	1600	2000
	2	10	280	320	320	320	320	400	504	640	800	1000	1280	1600	2000
	3	15	280	320	320	320	320	400	504	640	800	1000	1280	1600	2000
	4	20	280	320	320	320	320	400	504	640	800	1000	1280	1600	2000
	5	25	280	320	320	320	320	400	504	640	800	1000	1280	1600	2000
	6	30	280	320	320	320	320	400	504	640	800	1000	1280	1600	2000
	8	40		320	320	320	320	400	504	640	800	1000	1280	1600	2000
	10	50			320	320	320	400	504	640	800	1000	1280	1600	2000
	13	65					320	400	504	640	800	1000	1280	1600	2000
	16	80					320	400	504	640	800	1000	1280	1600	2000
	20	100						400	504	640	800	1000	1280	1600	2000
	25	125							504	640	800	1000	1280	1600	2000
	32	160								640	800	1000	1280	1600	2000
	40	200									800	1000	1280	1600	2000
	50	250										1000	1280	1600	2000
	63	315											1280	1600	2000

Series	Upstream device														
	OptiMat E100 L/N (10/20 kA at Ue = 400 V)											OptiMat E250 L/N/H (18/25/40 kA at Ue = 400 V)			
OptiDin BM63 C(10In)	In, A		16	20	25	32	40	50	63	80	100	125	160	200	250
	10	Isd, A	350	400	400	400	400	500	630	800	1000	1250	1600	2000	2500
	1	10	280	320	320	320	320	400	504	640	800	1000	1280	1600	2000
	2	20	280	320	320	320	320	400	504	640	800	1000	1280	1600	2000
	3	30	280	320	320	320	320	400	504	640	800	1000	1280	1600	2000
	4	40	280	320	320	320	320	400	504	640	800	1000	1280	1600	2000
	5	50	280	320	320	320	320	400	504	640	800	1000	1280	1600	2000
	6	60	280	320	320	320	320	400	504	640	800	1000	1280	1600	2000
	8	80		320	320	320	320	400	504	640	800	1000	1280	1600	2000
	10	100			320	320	320	400	504	640	800	1000	1280	1600	2000
	13	130					320	400	504	640	800	1000	1280	1600	2000
	16	160					320	400	504	640	800	1000	1280	1600	2000
	20	200						400	504	640	800	1000	1280	1600	2000
	25	250							504	640	800	1000	1280	1600	2000
	32	320								640	800	1000	1280	1600	2000
	40	400									800	1000	1280	1600	2000
	50	500										1000	1280	1600	2000
	63	630											1280	1600	2000

Series	Upstream device														
	OptiMat E100 L/N (10/20 kA at Ue = 400 V)											OptiMat E250 L/N/H (18/25/40 kA at Ue = 400 V)			
OptiDin BM63 D(20In)	In, A		16	20	25	32	40	50	63	80	100	125	160	200	250
	20	Isd, A	350	400	400	400	400	500	630	800	1000	1250	1600	2000	2500
	1	20	280	320	320	320	320	400	504	640	800	1000	1280	1600	2000
	2	40	280	320	320	320	320	400	504	640	800	1000	1280	1600	2000
	3	60	280	320	320	320	320	400	504	640	800	1000	1280	1600	2000
	4	80	280	320	320	320	320	400	504	640	800	1000	1280	1600	2000
	5	100	280	320	320	320	320	400	504	640	800	1000	1280	1600	2000
	6	120	280	320	320	320	320	400	504	640	800	1000	1280	1600	2000
	8	160		320	320	320	320	400	504	640	800	1000	1280	1600	2000
	10	200			320	320	320	400	504	640	800	1000	1280	1600	2000
	13	260							504	640	800	1000	1280	1600	2000
	16	320								640	800	1000	1280	1600	2000
	20	400								640	800	1000	1280	1600	2000
	25	500									800	1000	1280	1600	2000
	32	640											1280	1600	2000
	40	800											1280	1600	2000
	50	1000												1600	2000
	63	1260													

Series	Upstream device														
	OptiMat E100 L/N (10/20 kA at Ue = 400 V)											OptiMat E250 L/N/H (18/25/40 kA at Ue = 400 V)			
OptiDin BM63 Z(4,8In)	In, A		16	20	25	32	40	50	63	80	100	125	160	200	250
	4,8	Isd, A	350	400	400	400	400	500	630	800	1000	1250	1600	2000	2500
	1	4,8	280	320	320	320	320	400	504	640	800	1000	1280	1600	2000
	2	9,6	280	320	320	320	320	400	504	640	800	1000	1280	1600	2000
	3	14,4	280	320	320	320	320	400	504	640	800	1000	1280	1600	2000
	4	19,2	280	320	320	320	320	400	504	640	800	1000	1280	1600	2000
	5	24	280	320	320	320	320	400	504	640	800	1000	1280	1600	2000
	6	28,8	280	320	320	320	320	400	504	640	800	1000	1280	1600	2000
	8	38,4		320	320	320	320	400	504	640	800	1000	1280	1600	2000
	10	48			320	320	320	400	504	640	800	1000	1280	1600	2000
	13	62,4					320	400	504	640	800	1000	1280	1600	2000
	16	76,8					320	400	504	640	800	1000	1280	1600	2000
	20	96						400	504	640	800	1000	1280	1600	2000
	25	120							504	640	800	1000	1280	1600	2000
	32	153,6								640	800	1000	1280	1600	2000
	40	192									800	1000	1280	1600	2000
	50	240										1000	1280	1600	2000
	63	302,4											1280	1600	2000

	Upstream device														
Series	OptiMat E100 L/N (10/20 kA at Ue = 400 V)											OptiMat E250 L/N/H (18/25/40 kA at Ue = 400 V)			
OptiDin BM63 L(9,6In)	In, A		16	20	25	32	40	50	63	80	100	125	160	200	250
	9,6	Isd, A	350	400	400	400	400	500	630	800	1000	1250	1600	2000	2500
	1	9,6	280	320	320	320	320	400	504	640	800	1000	1280	1600	2000
	2	19,2	280	320	320	320	320	400	504	640	800	1000	1280	1600	2000
	3	28,8	280	320	320	320	320	400	504	640	800	1000	1280	1600	2000
	4	38,4	280	320	320	320	320	400	504	640	800	1000	1280	1600	2000
	5	48	280	320	320	320	320	400	504	640	800	1000	1280	1600	2000
	6	57,6	280	320	320	320	320	400	504	640	800	1000	1280	1600	2000
	8	76,8		320	320	320	320	400	504	640	800	1000	1280	1600	2000
	10	96			320	320	320	400	504	640	800	1000	1280	1600	2000
	13	124,8					320	400	504	640	800	1000	1280	1600	2000
	16	153,6					320	400	504	640	800	1000	1280	1600	2000
	20	192						400	504	640	800	1000	1280	1600	2000
	25	240							504	640	800	1000	1280	1600	2000
	32	307,2								640	800	1000	1280	1600	2000
	40	384									800	1000	1280	1600	2000
	50	480										1000	1280	1600	2000
	63	604,8											1280	1600	2000

	Upstream device														
Series	OptiMat E100 L/N (10/20 kA at Ue = 400 V)											OptiMat E250 L/N/H (18/25/40 kA at Ue = 400 V)			
OptiDin BM63 K(14,4In)	In, A		16	20	25	32	40	50	63	80	100	125	160	200	250
	14,4	Isd, A	350	400	400	400	400	500	630	800	1000	1250	1600	2000	2500
	1	14,4	280	320	320	320	320	400	504	640	800	1000	1280	1600	2000
	2	28,8	280	320	320	320	320	400	504	640	800	1000	1280	1600	2000
	3	43,2	280	320	320	320	320	400	504	640	800	1000	1280	1600	2000
	4	57,6	280	320	320	320	320	400	504	640	800	1000	1280	1600	2000
	5	72	280	320	320	320	320	400	504	640	800	1000	1280	1600	2000
	6	86,4	280	320	320	320	320	400	504	640	800	1000	1280	1600	2000
	8	115,2		320	320	320	320	400	504	640	800	1000	1280	1600	2000
	10	144			320	320	320	400	504	640	800	1000	1280	1600	2000
	13	187,2					320	400	504	640	800	1000	1280	1600	2000
	16	230,4						400	504	640	800	1000	1280	1600	2000
	20	288							504	640	800	1000	1280	1600	2000
	25	360								640	800	1000	1280	1600	2000
	32	460,8									800	1000	1280	1600	2000
	40	576										1000	1280	1600	2000
	50	720											1280	1600	2000
	63	907,2												1600	2000

Примечание: 1000 Selectivity current limit Is = 1000 A
Selectivity not ensured

OptiMat E - OptiDin BM125

	Upstream device														
Series	OptiMat E100 L/N (10/20 kA at Ue = 400 V)											OptiMat E250 L/N/H (18/25/40 kA at Ue = 400 V)			
OptiDin BM125 8In	In, A	0,7	16	20	25	32	40	50	63	80	100	125	160	200	250
	8	Isd, A	350	400	400	400	400	500	630	800	1000	1250	1600	2000	2500
	80	640	-1	-1	-1	-1	-1	-1	-1	-1	-1	-1	-1	1600	2000
	100	800	-1	-1	-1	-1	-1	-1	-1	-1	-1	-1	-1	-1	2000
	125	1000	-1	-1	-1	-1	-1	-1	-1	-1	-1	-1	-1	-1	-1
OptiDin BM125 14In	In, A		16	20	25	32	40	50	63	80	100	125	160	200	250
	14	Isd, A	350	400	400	400	400	500	630	800	1000	1250	1600	2000	2500
	80	1120	-1	-1	-1	-1	-1	-1	-1	-1	-1	-1	-1	-1	2000
	100	1400	-1	-1	-1	-1	-1	-1	-1	-1	-1	-1	-1	-1	-1
	125	1750	-1	-1	-1	-1	-1	-1	-1	-1	-1	-1	-1	-1	-1

Примечание: 2000 Selectivity current limit Is = 2000 A
Selectivity not ensured

OptiMat D-MR

Series		Upstream device	OptiMat D100 N/H (40/65 kA at Ue = 400 V)									
OptiMat D100 N/H (40/65 kA at Ue = 400 V)	In, A		40	45	50	56	63	70	80	90	95	100
		Isd, A	400	450	500	560	630	700	800	900	950	1000
	40	400					1200	1200	1200	1200	1200	1200
	45	450						1200	1200	1200	1200	1200
	50	500							1200	1200	1200	1200
	56	560								1200	1200	1200
	63	630									1200	1200
	70	700										
	80	800										
	90	900										
	95	950										
	100	1000										

Series		Upstream device	OptiMat D160 N/H (40/65 kA at Ue = 400 V)									
OptiMat D100 N/H (40/65 kA at Ue = 400 V)	In, A		64	72	80	89,6	100,8	112	128	144	152	160
		Isd, A	640	720	800	896	1008	1120	1280	1440	1520	1600
	40	400	2000	2000	2000	2000	2000	2000	2000	2000	2000	2000
	45	450		2000	2000	2000	2000	2000	2000	2000	2000	2000
	50	500			2000	2000	2000	2000	2000	2000	2000	2000
	56	560				2000	2000	2000	2000	2000	2000	2000
	63	630					2000	2000	2000	2000	2000	2000
	70	700						2000	2000	2000	2000	2000
	80	800							2000	2000	2000	2000
	90	900								2000	2000	2000
	95	950								2000	2000	2000
	100	1000									2000	2000

Series		Upstream device	OptiMat D250 N/H (40/65 kA at Ue = 400 V)									
OptiMat D100 N/H (40/65 kA at Ue = 400 V)	In, A		100	112,5	125	140	157,5	175	200	225	237,5	250
		Isd, A	1000	1125	1250	1400	1575	1750	2000	2250	2375	2500
	40	400	3000	3000	3000	3000	3000	3000	3000	3000	3000	3000
	45	450	3000	3000	3000	3000	3000	3000	3000	3000	3000	3000
	50	500	3000	3000	3000	3000	3000	3000	3000	3000	3000	3000
	56	560	3000	3000	3000	3000	3000	3000	3000	3000	3000	3000
	63	630	3000	3000	3000	3000	3000	3000	3000	3000	3000	3000
	70	700		3000	3000	3000	3000	3000	3000	3000	3000	3000
	80	800			3000	3000	3000	3000	3000	3000	3000	3000
	90	900				3000	3000	3000	3000	3000	3000	3000
	95	950					3000	3000	3000	3000	3000	3000
	100	1000					3000	3000	3000	3000	3000	3000

Series		Upstream device	OptiMat D400 N/H (40/65 kA at Ue = 400 V)												
OptiMat D100 N/H (40/65 kA at Ue = 400 V)	In, A		160	180	200	220	240	260	280	300	320	340	360	380	400
		Isd, A	1600	1800	2000	2200	2400	2600	2800	3000	3200	3400	3600	3800	4000
	40	400	5000	5000	5000	5000	5000	5000	5000	5000	5000	5000	5000	5000	5000
	45	450	5000	5000	5000	5000	5000	5000	5000	5000	5000	5000	5000	5000	5000
	50	500	5000	5000	5000	5000	5000	5000	5000	5000	5000	5000	5000	5000	5000
	56	560	5000	5000	5000	5000	5000	5000	5000	5000	5000	5000	5000	5000	5000
	63	630	5000	5000	5000	5000	5000	5000	5000	5000	5000	5000	5000	5000	5000
	70	700	5000	5000	5000	5000	5000	5000	5000	5000	5000	5000	5000	5000	5000
	80	800	5000	5000	5000	5000	5000	5000	5000	5000	5000	5000	5000	5000	5000
	90	900	5000	5000	5000	5000	5000	5000	5000	5000	5000	5000	5000	5000	5000
	95	950	5000	5000	5000	5000	5000	5000	5000	5000	5000	5000	5000	5000	5000
	100	1000	5000	5000	5000	5000	5000	5000	5000	5000	5000	5000	5000	5000	5000

Series		Upstream device	OptiMat D630 N/H (40/65 kA at Ue = 400 V)																			
OptiMat D100 N/H (40/65 kA at Ue = 400 V)	In, A		250	270	290	310	330	350	370	390	410	430	450	470	490	510	530	550	570	590	610	630
		Isd, A	2500	2700	2900	3100	3300	3500	3700	3900	4100	4300	4500	4700	4900	5100	5300	5500	5700	5900	6100	6300
	40	400	7000	7000	7000	7000	7000	7000	7000	7000	7000	7000	7000	7000	7000	7000	7000	7000	7000	7000	7000	7000
	45	450	7000	7000	7000	7000	7000	7000	7000	7000	7000	7000	7000	7000	7000	7000	7000	7000	7000	7000	7000	7000
	50	500	7000	7000	7000	7000	7000	7000	7000	7000	7000	7000	7000	7000	7000	7000	7000	7000	7000	7000	7000	7000
	56	560	7000	7000	7000	7000	7000	7000	7000	7000	7000	7000	7000	7000	7000	7000	7000	7000	7000	7000	7000	7000
	63	630	7000	7000	7000	7000	7000	7000	7000	7000	7000	7000	7000	7000	7000	7000	7000	7000	7000	7000	7000	7000
	70	700	7000	7000	7000	7000	7000	7000	7000	7000	7000	7000	7000	7000	7000	7000	7000	7000	7000	7000	7000	7000
	80	800	7000	7000	7000	7000	7000	7000	7000	7000	7000	7000	7000	7000	7000	7000	7000	7000	7000	7000	7000	7000
	90	900	7000	7000	7000	7000	7000	7000	7000	7000	7000	7000	7000	7000	7000	7000	7000	7000	7000	7000	7000	7000
	95	950	7000	7000	7000	7000	7000	7000	7000	7000	7000	7000	7000	7000	7000	7000	7000	7000	7000	7000	7000	7000
	100	1000	7000	7000	7000	7000	7000	7000	7000	7000	7000	7000	7000	7000	7000	7000	7000	7000	7000	7000	7000	7000

		Upstream device													
Series		OptiMat D800 N/H (50/85 kA at Ue = 400 V)													
OptiMat D100 N/H (40/65 kA at Ue = 400 V)	In, A		320	360	400	440	480	520	560	600	640	680	720	760	800
		Isd, A	3200	3600	4000	4400	4800	5200	5600	6000	6400	6800	7200	7600	8000
	40	400	9600	9600	9600	9600	9600	9600	9600	9600	9600	9600	9600	9600	9600
	45	450	9600	9600	9600	9600	9600	9600	9600	9600	9600	9600	9600	9600	9600
	50	500	9600	9600	9600	9600	9600	9600	9600	9600	9600	9600	9600	9600	9600
	56	560	9600	9600	9600	9600	9600	9600	9600	9600	9600	9600	9600	9600	9600
	63	630	9600	9600	9600	9600	9600	9600	9600	9600	9600	9600	9600	9600	9600
	70	700	9600	9600	9600	9600	9600	9600	9600	9600	9600	9600	9600	9600	9600
	80	800	9600	9600	9600	9600	9600	9600	9600	9600	9600	9600	9600	9600	9600
	90	900	9600	9600	9600	9600	9600	9600	9600	9600	9600	9600	9600	9600	9600
	95	950	9600	9600	9600	9600	9600	9600	9600	9600	9600	9600	9600	9600	9600
	100	1000	9600	9600	9600	9600	9600	9600	9600	9600	9600	9600	9600	9600	9600

		Upstream device													
Series		OptiMat D1000 N/H (50/85 kA at Ue = 400 V)													
OptiMat D100 N/H (40/65 kA at Ue = 400 V)	In, A		400	450	500	550	600	650	700	750	800	850	900	950	1000
		Isd, A	4000	4500	5000	5500	6000	6500	7000	7500	8000	8500	9000	9500	10000
	40	400	12000	12000	12000	12000	12000	12000	12000	12000	12000	12000	12000	12000	12000
	45	450	12000	12000	12000	12000	12000	12000	12000	12000	12000	12000	12000	12000	12000
	50	500	12000	12000	12000	12000	12000	12000	12000	12000	12000	12000	12000	12000	12000
	56	560	12000	12000	12000	12000	12000	12000	12000	12000	12000	12000	12000	12000	12000
	63	630	12000	12000	12000	12000	12000	12000	12000	12000	12000	12000	12000	12000	12000
	70	700	12000	12000	12000	12000	12000	12000	12000	12000	12000	12000	12000	12000	12000
	80	800	12000	12000	12000	12000	12000	12000	12000	12000	12000	12000	12000	12000	12000
	90	900	12000	12000	12000	12000	12000	12000	12000	12000	12000	12000	12000	12000	12000
	95	950	12000	12000	12000	12000	12000	12000	12000	12000	12000	12000	12000	12000	12000
	100	1000	12000	12000	12000	12000	12000	12000	12000	12000	12000	12000	12000	12000	12000

		Upstream device																
Series		OptiMat D1250 N/H (50/85 kA at Ue = 400 V)																
OptiMat D100 N/H (40/65 kA at Ue = 400 V)	In, A		500	550	600	650	700	750	800	850	900	950	1000	1050	1100	1150	1200	1250
		Isd, A	5000	5500	6000	6500	7000	7500	8000	8500	9000	9500	10000	10500	11000	11500	12000	12500
	40	400	15000	15000	15000	15000	15000	15000	15000	15000	15000	15000	15000	15000	15000	15000	15000	15000
	45	450	15000	15000	15000	15000	15000	15000	15000	15000	15000	15000	15000	15000	15000	15000	15000	15000
	50	500	15000	15000	15000	15000	15000	15000	15000	15000	15000	15000	15000	15000	15000	15000	15000	15000
	56	560	15000	15000	15000	15000	15000	15000	15000	15000	15000	15000	15000	15000	15000	15000	15000	15000
	63	630	15000	15000	15000	15000	15000	15000	15000	15000	15000	15000	15000	15000	15000	15000	15000	15000
	70	700	15000	15000	15000	15000	15000	15000	15000	15000	15000	15000	15000	15000	15000	15000	15000	15000
	80	800	15000	15000	15000	15000	15000	15000	15000	15000	15000	15000	15000	15000	15000	15000	15000	15000
	90	900	15000	15000	15000	15000	15000	15000	15000	15000	15000	15000	15000	15000	15000	15000	15000	15000
	95	950	15000	15000	15000	15000	15000	15000	15000	15000	15000	15000	15000	15000	15000	15000	15000	15000
	100	1000	15000	15000	15000	15000	15000	15000	15000	15000	15000	15000	15000	15000	15000	15000	15000	15000

		Upstream device																	
Series		OptiMat D1600 N/H (50/85 kA at Ue = 400 V)																	
OptiMat D100 N/H (40/65 kA at Ue = 400 V)	In, A		640	700	760	820	880	940	1000	1060	1120	1180	1240	1300	1360	1420	1480	1540	1600
		Isd, A	6400	7000	7600	8200	8800	9400	10000	10600	11200	11800	12400	13000	13600	14200	14800	15400	16000
	40	400	19200	19200	19200	19200	19200	19200	19200	19200	19200	19200	19200	19200	19200	19200	19200	19200	19200
	45	450	19200	19200	19200	19200	19200	19200	19200	19200	19200	19200	19200	19200	19200	19200	19200	19200	19200
	50	500	19200	19200	19200	19200	19200	19200	19200	19200	19200	19200	19200	19200	19200	19200	19200	19200	19200
	56	560	19200	19200	19200	19200	19200	19200	19200	19200	19200	19200	19200	19200	19200	19200	19200	19200	19200
	63	630	19200	19200	19200	19200	19200	19200	19200	19200	19200	19200	19200	19200	19200	19200	19200	19200	19200
	70	700	19200	19200	19200	19200	19200	19200	19200	19200	19200	19200	19200	19200	19200	19200	19200	19200	19200
	80	800	19200	19200	19200	19200	19200	19200	19200	19200	19200	19200	19200	19200	19200	19200	19200	19200	19200
	90	900	19200	19200	19200	19200	19200	19200	19200	19200	19200	19200	19200	19200	19200	19200	19200	19200	19200
	95	950	19200	19200	19200	19200	19200	19200	19200	19200	19200	19200	19200	19200	19200	19200	19200	19200	19200
	100	1000	19200	19200	19200	19200	19200	19200	19200	19200	19200	19200	19200	19200	19200	19200	19200	19200	19200

Series		Upstream device										
		OptiMat D100 N/H (40/65 kA at Ue = 400 V)										
OptiMat D160 N/H (40/65 kA at Ue = 400 V)	In, A		40	45	50	56	63	70	80	90	95	100
		Isd, A	400	450	500	560	630	700	800	900	950	1000
	64	640										1200
	72	720										
	80	800										
	89,6	896										
	100,8	1008										
	112	1120										
	128	1280										
	144	1440										
	152	1520										
	160	1600										

Series		Upstream device										
		OptiMat D160 N/H (40/65 kA at Ue = 400 V)										
OptiMat D160 N/H (40/65 kA at Ue = 400 V)	In, A		64	72	80	89,6	100,8	112	128	144	152	160
		Isd, A	640	720	800	896	1008	1120	1280	1440	1520	1600
	64	640					2000	2000	2000	2000	2000	2000
	72	720						2000	2000	2000	2000	2000
	80	800							2000	2000	2000	2000
	89,6	896								2000	2000	2000
	100,8	1008									2000	2000
	112	1120										
	128	1280										
	144	1440										
	152	1520										
	160	1600										

Series		Upstream device											
		OptiMat D250 N/H (40/65 kA at Ue = 400 V)											
OptiMat D160 N/H (40/65 kA at Ue = 400 V)	In, A		100	112,5	125	140	157,5	175	200	225	237,5	250
		Isd, A	1000	1125	1250	1400	1575	1750	2000	2250	2375	2500
	64	640	3000	3000	3000	3000	3000	3000	3000	3000	3000	3000
	72	720		3000	3000	3000	3000	3000	3000	3000	3000	3000
	80	800			3000	3000	3000	3000	3000	3000	3000	3000
	89,6	896				3000	3000	3000	3000	3000	3000	3000
	100,8	1008					3000	3000	3000	3000	3000	3000
	112	1120						3000	3000	3000	3000	3000
	128	1280							3000	3000	3000	3000
	144	1440								3000	3000	3000
	152	1520									3000	3000
	160	1600										3000

Series		Upstream device													
		OptiMat D400 N/H (40/65 kA at Ue = 400 V)													
OptiMat D160 N/H (40/65 kA at Ue = 400 V)	In, A		160	180	200	220	240	260	280	300	320	340	360	380	400
		Isd, A	1600	1800	2000	2200	2400	2600	2800	3000	3200	3400	3600	3800	4000
	64	640	5000	5000	5000	5000	5000	5000	5000	5000	5000	5000	5000	5000	5000
	72	720	5000	5000	5000	5000	5000	5000	5000	5000	5000	5000	5000	5000	5000
	80	800	5000	5000	5000	5000	5000	5000	5000	5000	5000	5000	5000	5000	5000
	89,6	896	5000	5000	5000	5000	5000	5000	5000	5000	5000	5000	5000	5000	5000
	100,8	1008	5000	5000	5000	5000	5000	5000	5000	5000	5000	5000	5000	5000	5000
	112	1120		5000	5000	5000	5000	5000	5000	5000	5000	5000	5000	5000	5000
	128	1280			5000	5000	5000	5000	5000	5000	5000	5000	5000	5000	5000
	144	1440				5000	5000	5000	5000	5000	5000	5000	5000	5000	5000
	152	1520					5000	5000	5000	5000	5000	5000	5000	5000	5000
	160	1600					5000	5000	5000	5000	5000	5000	5000	5000	5000

Series		Upstream device																					
		OptiMat D630 N/H (40/65 kA at Ue = 400 V)																					
OptiMat D160 N/H (40/65 kA at Ue = 400 V)	In, A		250	270	290	310	330	350	370	390	410	430	450	470	490	510	530	550	570	590	610	630
		Isd, A	2500	2700	2900	3100	3300	3500	3700	3900	4100	4300	4500	4700	4900	5100	5300	5500	5700	5900	6100	6300
	64	640	7000	7000	7000	7000	7000	7000	7000	7000	7000	7000	7000	7000	7000	7000	7000	7000	7000	7000	7000	7000
	72	720	7000	7000	7000	7000	7000	7000	7000	7000	7000	7000	7000	7000	7000	7000	7000	7000	7000	7000	7000	7000
	80	800	7000	7000	7000	7000	7000	7000	7000	7000	7000	7000	7000	7000	7000	7000	7000	7000	7000	7000	7000	7000
	89,6	896	7000	7000	7000	7000	7000	7000	7000	7000	7000	7000	7000	7000	7000	7000	7000	7000	7000	7000	7000	7000
	100,8	1008	7000	7000	7000	7000	7000	7000	7000	7000	7000	7000	7000	7000	7000	7000	7000	7000	7000	7000	7000	7000
	112	1120	7000	7000	7000	7000	7000	7000	7000	7000	7000	7000	7000	7000	7000	7000	7000	7000	7000	7000	7000	7000
	128	1280	7000	7000	7000	7000	7000	7000	7000	7000	7000	7000	7000	7000	7000	7000	7000	7000	7000	7000	7000	7000
	144	1440	7000	7000	7000	7000	7000	7000	7000	7000	7000	7000	7000	7000	7000	7000	7000	7000	7000	7000	7000	7000
	152	1520	7000	7000	7000	7000	7000	7000	7000	7000	7000	7000	7000	7000	7000	7000	7000	7000	7000	7000	7000	7000
	160	1600	7000	7000	7000	7000	7000	7000	7000	7000	7000	7000	7000	7000	7000	7000	7000	7000	7000	7000	7000	7000

		Upstream device													
Series		OptiMat D800 N/H (50/85 kA at Ue = 400 V)													
OptiMat D160 N/H (40/65 kA at Ue = 400 V)	In, A		320	360	400	440	480	520	560	600	640	680	720	760	800
		Isd, A	3200	3600	4000	4400	4800	5200	5600	6000	6400	6800	7200	7600	8000
	64	640	9600	9600	9600	9600	9600	9600	9600	9600	9600	9600	9600	9600	9600
	72	720	9600	9600	9600	9600	9600	9600	9600	9600	9600	9600	9600	9600	9600
	80	800	9600	9600	9600	9600	9600	9600	9600	9600	9600	9600	9600	9600	9600
	89,6	896	9600	9600	9600	9600	9600	9600	9600	9600	9600	9600	9600	9600	9600
	100,8	1008	9600	9600	9600	9600	9600	9600	9600	9600	9600	9600	9600	9600	9600
	112	1120	9600	9600	9600	9600	9600	9600	9600	9600	9600	9600	9600	9600	9600
	128	1280	9600	9600	9600	9600	9600	9600	9600	9600	9600	9600	9600	9600	9600
	144	1440	9600	9600	9600	9600	9600	9600	9600	9600	9600	9600	9600	9600	9600
	152	1520	9600	9600	9600	9600	9600	9600	9600	9600	9600	9600	9600	9600	9600
	160	1600	9600	9600	9600	9600	9600	9600	9600	9600	9600	9600	9600	9600	9600

		Upstream device													
Series		OptiMat D1000 N/H (50/85 kA at Ue = 400 V)													
OptiMat D160 N/H (40/65 kA at Ue = 400 V)	In, A		400	450	500	550	600	650	700	750	800	850	900	950	1000
		Isd, A	4000	4500	5000	5500	6000	6500	7000	7500	8000	8500	9000	9500	10000
	64	640	12000	12000	12000	12000	12000	12000	12000	12000	12000	12000	12000	12000	12000
	72	720	12000	12000	12000	12000	12000	12000	12000	12000	12000	12000	12000	12000	12000
	80	800	12000	12000	12000	12000	12000	12000	12000	12000	12000	12000	12000	12000	12000
	89,6	896	12000	12000	12000	12000	12000	12000	12000	12000	12000	12000	12000	12000	12000
	100,8	1008	12000	12000	12000	12000	12000	12000	12000	12000	12000	12000	12000	12000	12000
	112	1120	12000	12000	12000	12000	12000	12000	12000	12000	12000	12000	12000	12000	12000
	128	1280	12000	12000	12000	12000	12000	12000	12000	12000	12000	12000	12000	12000	12000
	144	1440	12000	12000	12000	12000	12000	12000	12000	12000	12000	12000	12000	12000	12000
	152	1520	12000	12000	12000	12000	12000	12000	12000	12000	12000	12000	12000	12000	12000
	160	1600	12000	12000	12000	12000	12000	12000	12000	12000	12000	12000	12000	12000	12000

		Upstream device																
Series		OptiMat D1250 N/H (50/85 kA at Ue = 400 V)																
OptiMat D160 N/H (40/65 kA at Ue = 400 V)	In, A		500	550	600	650	700	750	800	850	900	950	1000	1050	1100	1150	1200	1250
		Isd, A	5000	5500	6000	6500	7000	7500	8000	8500	9000	9500	10000	10500	11000	11500	12000	12500
	64	640	15000	15000	15000	15000	15000	15000	15000	15000	15000	15000	15000	15000	15000	15000	15000	15000
	72	720	15000	15000	15000	15000	15000	15000	15000	15000	15000	15000	15000	15000	15000	15000	15000	15000
	80	800	15000	15000	15000	15000	15000	15000	15000	15000	15000	15000	15000	15000	15000	15000	15000	15000
	89,6	896	15000	15000	15000	15000	15000	15000	15000	15000	15000	15000	15000	15000	15000	15000	15000	15000
	100,8	1008	15000	15000	15000	15000	15000	15000	15000	15000	15000	15000	15000	15000	15000	15000	15000	15000
	112	1120	15000	15000	15000	15000	15000	15000	15000	15000	15000	15000	15000	15000	15000	15000	15000	15000
	128	1280	15000	15000	15000	15000	15000	15000	15000	15000	15000	15000	15000	15000	15000	15000	15000	15000
	144	1440	15000	15000	15000	15000	15000	15000	15000	15000	15000	15000	15000	15000	15000	15000	15000	15000
	152	1520	15000	15000	15000	15000	15000	15000	15000	15000	15000	15000	15000	15000	15000	15000	15000	15000
	160	1600	15000	15000	15000	15000	15000	15000	15000	15000	15000	15000	15000	15000	15000	15000	15000	15000

		Upstream device																	
Series		OptiMat D1600 N/H (50/85 kA at Ue = 400 V)																	
OptiMat D160 N/H (40/65 kA at Ue = 400 V)	In, A		640	700	760	820	880	940	1000	1060	1120	1180	1240	1300	1360	1420	1480	1540	1600
		Isd, A	6400	7000	7600	8200	8800	9400	10000	10600	11200	11800	12400	13000	13600	14200	14800	15400	16000
	64	640	19200	19200	19200	19200	19200	19200	19200	19200	19200	19200	19200	19200	19200	19200	19200	19200	19200
	72	720	19200	19200	19200	19200	19200	19200	19200	19200	19200	19200	19200	19200	19200	19200	19200	19200	19200
	80	800	19200	19200	19200	19200	19200	19200	19200	19200	19200	19200	19200	19200	19200	19200	19200	19200	19200
	89,6	896	19200	19200	19200	19200	19200	19200	19200	19200	19200	19200	19200	19200	19200	19200	19200	19200	19200
	100,8	1008	19200	19200	19200	19200	19200	19200	19200	19200	19200	19200	19200	19200	19200	19200	19200	19200	19200
	112	1120	19200	19200	19200	19200	19200	19200	19200	19200	19200	19200	19200	19200	19200	19200	19200	19200	19200
	128	1280	19200	19200	19200	19200	19200	19200	19200	19200	19200	19200	19200	19200	19200	19200	19200	19200	19200
	144	1440	19200	19200	19200	19200	19200	19200	19200	19200	19200	19200	19200	19200	19200	19200	19200	19200	19200
	152	1520	19200	19200	19200	19200	19200	19200	19200	19200	19200	19200	19200	19200	19200	19200	19200	19200	19200
	160	1600	19200	19200	19200	19200	19200	19200	19200	19200	19200	19200	19200	19200	19200	19200	19200	19200	19200

		Upstream device										
Series		OptiMat D100 N/H (40/65 kA at Ue = 400 V)										
OptiMat D250 N/H (40/65 kA at Ue = 400 V)	In, A		40	45	50	56	63	70	80	90	95	100
		Isd, A	400	450	500	560	630	700	800	900	950	1000
	100	1000										
	113	1130										
	125	1250										
	140	1400										
	158	1580										
	175	1750										
	200	2000										
	225	2250										
	238	2380										
	250	2500										

		Upstream device										
Series		OptiMat D160 N/H (40/65 kA at Ue = 400 V)										
OptiMat D250 N/H (40/65 kA at Ue = 400 V)	In, A		64	72	80	89,6	100,8	112	128	144	152	160
		Isd, A	640	720	800	896	1008	1120	1280	1440	1520	1600
	100	1000									2000	2000
	113	1130										
	125	1250										
	140	1400										
	158	1580										
	175	1750										
	200	2000										
	225	2250										
	238	2380										
	250	2500										

		Upstream device										
Series		OptiMat D250 N/H (40/65 kA at Ue = 400 V)										
OptiMat D250 N/H (40/65 kA at Ue = 400 V)	In, A		100	112,5	125	140	157,5	175	200	225	237,5	250
		Isd, A	1000	1125	1250	1400	1575	1750	2000	2250	2375	2500
	100	1000					3000	3000	3000	3000	3000	3000
	113	1130						3000	3000	3000	3000	3000
	125	1250							3000	3000	3000	3000
	140	1400								3000	3000	3000
	158	1580									3000	3000
	175	1750										
	200	2000										
	225	2250										
	238	2380										
	250	2500										

		Upstream device													
Series		OptiMat D400 N/H (40/65 kA at Ue = 400 V)													
OptiMat D250 N/H (40/65 kA at Ue = 400 V)	In, A		160	180	200	220	240	260	280	300	320	340	360	380	400
		Isd, A	1600	1800	2000	2200	2400	2600	2800	3000	3200	3400	3600	3800	4000
	100	1000	5000	5000	5000	5000	5000	5000	5000	5000	5000	5000	5000	5000	5000
	113	1130		5000	5000	5000	5000	5000	5000	5000	5000	5000	5000	5000	5000
	125	1250			5000	5000	5000	5000	5000	5000	5000	5000	5000	5000	5000
	140	1400				5000	5000	5000	5000	5000	5000	5000	5000	5000	5000
	158	1580					5000	5000	5000	5000	5000	5000	5000	5000	5000
	175	1750							5000	5000	5000	5000	5000	5000	5000
	200	2000								5000	5000	5000	5000	5000	5000
	225	2250										5000	5000	5000	5000
	238	2380											5000	5000	5000
	250	2500												5000	5000

		Upstream device																				
Series		OptiMat D630 N/H (40/65 kA at Ue = 400 V)																				
OptiMat D250 N/H (40/65 kA at Ue = 400 V)	In, A		250	270	290	310	330	350	370	390	410	430	450	470	490	510	530	550	570	590	610	630
		Isd, A	2500	2700	2900	3100	3300	3500	3700	3900	4100	4300	4500	4700	4900	5100	5300	5500	5700	5900	6100	6300
	100	1000	7000	7000	7000	7000	7000	7000	7000	7000	7000	7000	7000	7000	7000	7000	7000	7000	7000	7000	7000	7000
	113	1130	7000	7000	7000	7000	7000	7000	7000	7000	7000	7000	7000	7000	7000	7000	7000	7000	7000	7000	7000	7000
	125	1250	7000	7000	7000	7000	7000	7000	7000	7000	7000	7000	7000	7000	7000	7000	7000	7000	7000	7000	7000	7000
	140	1400	7000	7000	7000	7000	7000	7000	7000	7000	7000	7000	7000	7000	7000	7000	7000	7000	7000	7000	7000	7000
	158	1580	7000	7000	7000	7000	7000	7000	7000	7000	7000	7000	7000	7000	7000	7000	7000	7000	7000	7000	7000	7000
	175	1750		7000	7000	7000	7000	7000	7000	7000	7000	7000	7000	7000	7000	7000	7000	7000	7000	7000	7000	7000
	200	2000				7000	7000	7000	7000	7000	7000	7000	7000	7000	7000	7000	7000	7000	7000	7000	7000	7000
	225	2250						7000	7000	7000	7000	7000	7000	7000	7000	7000	7000	7000	7000	7000	7000	7000
	238	2380							7000	7000	7000	7000	7000	7000	7000	7000	7000	7000	7000	7000	7000	7000
	250	2500								7000	7000	7000	7000	7000	7000	7000	7000	7000	7000	7000	7000	7000

		Upstream device													
Series		OptiMat D800 N/H (50/85 kA at Ue = 400 V)													
OptiMat D250 N/H (40/65 kA at Ue = 400 V)	In, A		320	360	400	440	480	520	560	600	640	680	720	760	800
		Isd, A	3200	3600	4000	4400	4800	5200	5600	6000	6400	6800	7200	7600	8000
	100	1000	9600	9600	9600	9600	9600	9600	9600	9600	9600	9600	9600	9600	9600
	113	1130	9600	9600	9600	9600	9600	9600	9600	9600	9600	9600	9600	9600	9600
	125	1250	9600	9600	9600	9600	9600	9600	9600	9600	9600	9600	9600	9600	9600
	140	1400	9600	9600	9600	9600	9600	9600	9600	9600	9600	9600	9600	9600	9600
	158	1580	9600	9600	9600	9600	9600	9600	9600	9600	9600	9600	9600	9600	9600
	175	1750	9600	9600	9600	9600	9600	9600	9600	9600	9600	9600	9600	9600	9600
	200	2000	9600	9600	9600	9600	9600	9600	9600	9600	9600	9600	9600	9600	9600
	225	2250		9600	9600	9600	9600	9600	9600	9600	9600	9600	9600	9600	9600
	238	2380		9600	9600	9600	9600	9600	9600	9600	9600	9600	9600	9600	9600
	250	2500			9600	9600	9600	9600	9600	9600	9600	9600	9600	9600	9600

		Upstream device													
Series		OptiMat D1000 N/H (50/85 kA at Ue = 400 V)													
OptiMat D250 N/H (40/65 kA at Ue = 400 V)	In, A		400	450	500	550	600	650	700	750	800	850	900	950	1000
		Isd, A	4000	4500	5000	5500	6000	6500	7000	7500	8000	8500	9000	9500	10000
	100	1000	12000	12000	12000	12000	12000	12000	12000	12000	12000	12000	12000	12000	12000
	113	1130	12000	12000	12000	12000	12000	12000	12000	12000	12000	12000	12000	12000	12000
	125	1250	12000	12000	12000	12000	12000	12000	12000	12000	12000	12000	12000	12000	12000
	140	1400	12000	12000	12000	12000	12000	12000	12000	12000	12000	12000	12000	12000	12000
	158	1580	12000	12000	12000	12000	12000	12000	12000	12000	12000	12000	12000	12000	12000
	175	1750	12000	12000	12000	12000	12000	12000	12000	12000	12000	12000	12000	12000	12000
	200	2000	12000	12000	12000	12000	12000	12000	12000	12000	12000	12000	12000	12000	12000
	225	2250	12000	12000	12000	12000	12000	12000	12000	12000	12000	12000	12000	12000	12000
	238	2380	12000	12000	12000	12000	12000	12000	12000	12000	12000	12000	12000	12000	12000
	250	2500	12000	12000	12000	12000	12000	12000	12000	12000	12000	12000	12000	12000	12000

		Upstream device																
Series		OptiMat D1250 N/H (50/85 kA at Ue = 400 V)																
OptiMat D250 N/H (40/65 kA at Ue = 400 V)	In, A		500	550	600	650	700	750	800	850	900	950	1000	1050	1100	1150	1200	1250
		Isd, A	5000	5500	6000	6500	7000	7500	8000	8500	9000	9500	10000	10500	11000	11500	12000	12500
	100	1000	15000	15000	15000	15000	15000	15000	15000	15000	15000	15000	15000	15000	15000	15000	15000	15000
	113	1130	15000	15000	15000	15000	15000	15000	15000	15000	15000	15000	15000	15000	15000	15000	15000	15000
	125	1250	15000	15000	15000	15000	15000	15000	15000	15000	15000	15000	15000	15000	15000	15000	15000	15000
	140	1400	15000	15000	15000	15000	15000	15000	15000	15000	15000	15000	15000	15000	15000	15000	15000	15000
	158	1580	15000	15000	15000	15000	15000	15000	15000	15000	15000	15000	15000	15000	15000	15000	15000	15000
	175	1750	15000	15000	15000	15000	15000	15000	15000	15000	15000	15000	15000	15000	15000	15000	15000	15000
	200	2000	15000	15000	15000	15000	15000	15000	15000	15000	15000	15000	15000	15000	15000	15000	15000	15000
	225	2250	15000	15000	15000	15000	15000	15000	15000	15000	15000	15000	15000	15000	15000	15000	15000	15000
	238	2380	15000	15000	15000	15000	15000	15000	15000	15000	15000	15000	15000	15000	15000	15000	15000	15000
	250	2500	15000	15000	15000	15000	15000	15000	15000	15000	15000	15000	15000	15000	15000	15000	15000	15000

		Upstream device																	
Series		OptiMat D1600 N/H (50/85 kA at Ue = 400 V)																	
OptiMat D250 N/H (40/65 kA at Ue = 400 V)	In, A		640	700	760	820	880	940	1000	1060	1120	1180	1240	1300	1360	1420	1480	1540	1600
		Isd, A	6400	7000	7600	8200	8800	9400	10000	10600	11200	11800	12400	13000	13600	14200	14800	15400	16000
	100	1000	19200	19200	19200	19200	19200	19200	19200	19200	19200	19200	19200	19200	19200	19200	19200	19200	19200
	113	1130	19200	19200	19200	19200	19200	19200	19200	19200	19200	19200	19200	19200	19200	19200	19200	19200	19200
	125	1250	19200	19200	19200	19200	19200	19200	19200	19200	19200	19200	19200	19200	19200	19200	19200	19200	19200
	140	1400	19200	19200	19200	19200	19200	19200	19200	19200	19200	19200	19200	19200	19200	19200	19200	19200	19200
	158	1580	19200	19200	19200	19200	19200	19200	19200	19200	19200	19200	19200	19200	19200	19200	19200	19200	19200
	175	1750	19200	19200	19200	19200	19200	19200	19200	19200	19200	19200	19200	19200	19200	19200	19200	19200	19200
	200	2000	19200	19200	19200	19200	19200	19200	19200	19200	19200	19200	19200	19200	19200	19200	19200	19200	19200
	225	2250	19200	19200	19200	19200	19200	19200	19200	19200	19200	19200	19200	19200	19200	19200	19200	19200	19200
	238	2380	19200	19200	19200	19200	19200	19200	19200	19200	19200	19200	19200	19200	19200	19200	19200	19200	19200
	250	2500	19200	19200	19200	19200	19200	19200	19200	19200	19200	19200	19200	19200	19200	19200	19200	19200	19200

		Upstream device										
Series		OptiMat D100 N/H (40/65 kA at Ue = 400 V)										
OptiMat D400 N/H (40/65 kA at Ue = 400 V)	In, A		40	45	50	56	63	70	80	90	95	100
		Isd, A	400	450	500	560	630	700	800	900	950	1000
	160	1600										
	180	1800										
	200	2000										
	220	2200										
	240	2400										
	260	2600										
	280	2800										
	300	3000										
	320	3200										
	340	3400										
	360	3600										
	380	3800										
	400	4000										

		Upstream device										
Series		OptiMat D160 N/H (40/65 kA at Ue = 400 V)										
OptiMat D400 N/H (40/65 kA at Ue = 400 V)	In, A		64	72	80	89,6	100,8	112	128	144	152	160
		Isd, A	640	720	800	896	1008	1120	1280	1440	1520	1600
	160	1600										
	180	1800										
	200	2000										
	220	2200										
	240	2400										
	260	2600										
	280	2800										
	300	3000										
	320	3200										
	340	3400										
	360	3600										
	380	3800										
	400	4000										

		Upstream device										
Series		OptiMat D250 N/H (40/65 kA at Ue = 400 V)										
OptiMat D400 N/H (40/65 kA at Ue = 400 V)	In, A		100	112,5	125	140	157,5	175	200	225	237,5	250
		Isd, A	1000	1125	1250	1400	1575	1750	2000	2250	2375	2500
	160	1600										3000
	180	1800										
	200	2000										
	220	2200										
	240	2400										
	260	2600										
	280	2800										
	300	3000										
	320	3200										
	340	3400										
	360	3600										
	380	3800										
	400	4000										

		Upstream device													
Series		OptiMat D400 N/H (40/65 kA at Ue = 400 V)													
OptiMat D400 N/H (40/65 kA at Ue = 400 V)	In, A		160	180	200	220	240	260	280	300	320	340	360	380	400
		Isd, A	1600	1800	2000	2200	2400	2600	2800	3000	3200	3400	3600	3800	4000
	160	1600					5000	5000	5000	5000	5000	5000	5000	5000	5000
	180	1800							5000	5000	5000	5000	5000	5000	5000
	200	2000								5000	5000	5000	5000	5000	5000
	220	2200										5000	5000	5000	5000
	240	2400											5000	5000	5000
	260	2600													5000
	280	2800													
	300	3000													
	320	3200													
	340	3400													
	360	3600													
	380	3800													
	400	4000													

		Upstream device																				
Series		OptiMat D630 N/H (40/65 kA at Ue = 400 V)																				
OptiMat D400 N/H (40/65 kA at Ue = 400 V)	In, A		250	270	290	310	330	350	370	390	410	430	450	470	490	510	530	550	570	590	610	630
		Isd, A	2500	2700	2900	3100	3300	3500	3700	3900	4100	4300	4500	4700	4900	5100	5300	5500	5700	5900	6100	6300
	160	1600	7000	7000	7000	7000	7000	7000	7000	7000	7000	7000	7000	7000	7000	7000	7000	7000	7000	7000	7000	7000
	180	1800		7000	7000	7000	7000	7000	7000	7000	7000	7000	7000	7000	7000	7000	7000	7000	7000	7000	7000	7000
	200	2000				7000	7000	7000	7000	7000	7000	7000	7000	7000	7000	7000	7000	7000	7000	7000	7000	7000
	220	2200					7000	7000	7000	7000	7000	7000	7000	7000	7000	7000	7000	7000	7000	7000	7000	7000
	240	2400							7000	7000	7000	7000	7000	7000	7000	7000	7000	7000	7000	7000	7000	7000
	260	2600								7000	7000	7000	7000	7000	7000	7000	7000	7000	7000	7000	7000	7000
	280	2800										7000	7000	7000	7000	7000	7000	7000	7000	7000	7000	7000
	300	3000											7000	7000	7000	7000	7000	7000	7000	7000	7000	7000
	320	3200													7000	7000	7000	7000	7000	7000	7000	7000
	340	3400														7000	7000	7000	7000	7000	7000	7000
	360	3600																7000	7000	7000	7000	7000
	380	3800																	7000	7000	7000	7000
	400	4000																			7000	7000

		Upstream device													
Series		OptiMat D800 N/H (50/85 kA at Ue = 400 V)													
OptiMat D400 N/H (40/65 kA at Ue = 400 V)	In, A		320	360	400	440	480	520	560	600	640	680	720	760	800
		Isd, A	3200	3600	4000	4400	4800	5200	5600	6000	6400	6800	7200	7600	8000
	160	1600	9600	9600	9600	9600	9600	9600	9600	9600	9600	9600	9600	9600	9600
	180	1800	9600	9600	9600	9600	9600	9600	9600	9600	9600	9600	9600	9600	9600
	200	2000	9600	9600	9600	9600	9600	9600	9600	9600	9600	9600	9600	9600	9600
	220	2200		9600	9600	9600	9600	9600	9600	9600	9600	9600	9600	9600	9600
	240	2400		9600	9600	9600	9600	9600	9600	9600	9600	9600	9600	9600	9600
	260	2600			9600	9600	9600	9600	9600	9600	9600	9600	9600	9600	9600
	280	2800				9600	9600	9600	9600	9600	9600	9600	9600	9600	9600
	300	3000					9600	9600	9600	9600	9600	9600	9600	9600	9600
	320	3200					9600	9600	9600	9600	9600	9600	9600	9600	9600
	340	3400						9600	9600	9600	9600	9600	9600	9600	9600
	360	3600							9600	9600	9600	9600	9600	9600	9600
	380	3800								9600	9600	9600	9600	9600	9600
	400	4000								9600	9600	9600	9600	9600	9600

		Upstream device													
Series		OptiMat D1000 N/H (50/85 kA at Ue = 400 V)													
OptiMat D400 N/H (40/65 kA at Ue = 400 V)	In, A		400	450	500	550	600	650	700	750	800	850	900	950	1000
		Isd, A	4000	4500	5000	5500	6000	6500	7000	7500	8000	8500	9000	9500	10000
	160	1600	12000	12000	12000	12000	12000	12000	12000	12000	12000	12000	12000	12000	12000
	180	1800	12000	12000	12000	12000	12000	12000	12000	12000	12000	12000	12000	12000	12000
	200	2000	12000	12000	12000	12000	12000	12000	12000	12000	12000	12000	12000	12000	12000
	220	2200	12000	12000	12000	12000	12000	12000	12000	12000	12000	12000	12000	12000	12000
	240	2400	12000	12000	12000	12000	12000	12000	12000	12000	12000	12000	12000	12000	12000
	260	2600	12000	12000	12000	12000	12000	12000	12000	12000	12000	12000	12000	12000	12000
	280	2800		12000	12000	12000	12000	12000	12000	12000	12000	12000	12000	12000	12000
	300	3000		12000	12000	12000	12000	12000	12000	12000	12000	12000	12000	12000	12000
	320	3200			12000	12000	12000	12000	12000	12000	12000	12000	12000	12000	12000
	340	3400				12000	12000	12000	12000	12000	12000	12000	12000	12000	12000
	360	3600				12000	12000	12000	12000	12000	12000	12000	12000	12000	12000
	380	3800					12000	12000	12000	12000	12000	12000	12000	12000	12000
	400	4000					12000	12000	12000	12000	12000	12000	12000	12000	12000

Series		Upstream device																	
		OptiMat D1250 N/H (50/85 kA at Ue = 400 V)																	
OptiMat D400 N/H (40/65 kA at Ue = 400 V)	In, A		500	550	600	650	700	750	800	850	900	950	1000	1050	1100	1150	1200	1250
		Isd, A	5000	5500	6000	6500	7000	7500	8000	8500	9000	9500	10000	10500	11000	11500	12000	12500
	160	1600	15000	15000	15000	15000	15000	15000	15000	15000	15000	15000	15000	15000	15000	15000	15000	15000
	180	1800	15000	15000	15000	15000	15000	15000	15000	15000	15000	15000	15000	15000	15000	15000	15000	15000
	200	2000	15000	15000	15000	15000	15000	15000	15000	15000	15000	15000	15000	15000	15000	15000	15000	15000
	220	2200	15000	15000	15000	15000	15000	15000	15000	15000	15000	15000	15000	15000	15000	15000	15000	15000
	240	2400	15000	15000	15000	15000	15000	15000	15000	15000	15000	15000	15000	15000	15000	15000	15000	15000
	260	2600	15000	15000	15000	15000	15000	15000	15000	15000	15000	15000	15000	15000	15000	15000	15000	15000
	280	2800	15000	15000	15000	15000	15000	15000	15000	15000	15000	15000	15000	15000	15000	15000	15000	15000
	300	3000	15000	15000	15000	15000	15000	15000	15000	15000	15000	15000	15000	15000	15000	15000	15000	15000
	320	3200	15000	15000	15000	15000	15000	15000	15000	15000	15000	15000	15000	15000	15000	15000	15000	15000
	340	3400		15000	15000	15000	15000	15000	15000	15000	15000	15000	15000	15000	15000	15000	15000	15000
	360	3600		15000	15000	15000	15000	15000	15000	15000	15000	15000	15000	15000	15000	15000	15000	15000
	380	3800			15000	15000	15000	15000	15000	15000	15000	15000	15000	15000	15000	15000	15000	15000
	400	4000			15000	15000	15000	15000	15000	15000	15000	15000	15000	15000	15000	15000	15000	15000

Series		Upstream device																	
		OptiMat D1600 N/H (50/85 kA at Ue = 400 V)																	
OptiMat D400 N/H (40/65 kA at Ue = 400 V)	In, A		640	700	760	820	880	940	1000	1060	1120	1180	1240	1300	1360	1420	1480	1540	1600
		Isd, A	6400	7000	7600	8200	8800	9400	10000	10600	11200	11800	12400	13000	13600	14200	14800	15400	16000
	160	1600	19200	19200	19200	19200	19200	19200	19200	19200	19200	19200	19200	19200	19200	19200	19200	19200	19200
	180	1800	19200	19200	19200	19200	19200	19200	19200	19200	19200	19200	19200	19200	19200	19200	19200	19200	19200
	200	2000	19200	19200	19200	19200	19200	19200	19200	19200	19200	19200	19200	19200	19200	19200	19200	19200	19200
	220	2200	19200	19200	19200	19200	19200	19200	19200	19200	19200	19200	19200	19200	19200	19200	19200	19200	19200
	240	2400	19200	19200	19200	19200	19200	19200	19200	19200	19200	19200	19200	19200	19200	19200	19200	19200	19200
	260	2600	19200	19200	19200	19200	19200	19200	19200	19200	19200	19200	19200	19200	19200	19200	19200	19200	19200
	280	2800	19200	19200	19200	19200	19200	19200	19200	19200	19200	19200	19200	19200	19200	19200	19200	19200	19200
	300	3000	19200	19200	19200	19200	19200	19200	19200	19200	19200	19200	19200	19200	19200	19200	19200	19200	19200
	320	3200	19200	19200	19200	19200	19200	19200	19200	19200	19200	19200	19200	19200	19200	19200	19200	19200	19200
	340	3400	19200	19200	19200	19200	19200	19200	19200	19200	19200	19200	19200	19200	19200	19200	19200	19200	19200
	360	3600	19200	19200	19200	19200	19200	19200	19200	19200	19200	19200	19200	19200	19200	19200	19200	19200	19200
	380	3800	19200	19200	19200	19200	19200	19200	19200	19200	19200	19200	19200	19200	19200	19200	19200	19200	19200
	400	4000	19200	19200	19200	19200	19200	19200	19200	19200	19200	19200	19200	19200	19200	19200	19200	19200	19200

Series		Upstream device									
		OptiMat D100 N/H (40/65 kA at Ue = 400 V)									
OptiMat D630 N/H (40/65 kA at Ue = 400 V)	In, A		40	45	50	56	63	70	80	90	95	100
		Isd, A	400	450	500	560	630	700	800	900	950	1000
	250	2500										
	270	2700										
	290	2900										
	310	3100										
	330	3300										
	350	3500										
	370	3700										
	390	3900										
	410	4100										
	430	4300										
	450	4500										
	470	4700										
	490	4900										
	510	5100										
	530	5300										
	550	5500										
	570	5700										
	590	5900										
	610	6100										
	630	6300										

Series		Upstream device										
		OptiMat D160 N/H (40/65 kA at Ue = 400 V)										
OptiMat D630 N/H (40/65 kA at Ue = 400 V)	In, A		64	72	80	89,6	100,8	112	128	144	152	160
		Isd, A	640	720	800	896	1008	1120	1280	1440	1520	1600
	250	2500										
	270	2700										
	290	2900										
	310	3100										
	330	3300										
	350	3500										
	370	3700										
	390	3900										
	410	4100										
	430	4300										
	450	4500										
	470	4700										
	490	4900										
	510	5100										
	530	5300										
	550	5500										
	570	5700										
	590	5900										
	610	6100										
	630	6300										

		Upstream device										
Series		OptiMat D250 N/H (40/65 kA at Ue = 400 V)										
OptiMat D630 N/H (40/65 kA at Ue = 400 V)	In, A		100	112,5	125	140	157,5	175	200	225	237,5	250
		Isd, A	1000	1125	1250	1400	1575	1750	2000	2250	2375	2500
	250	2500										
	270	2700										
	290	2900										
	310	3100										
	330	3300										
	350	3500										
	370	3700										
	390	3900										
	410	4100										
	430	4300										
	450	4500										
	470	4700										
	490	4900										
	510	5100										
	530	5300										
	550	5500										
	570	5700										
	590	5900										
	610	6100										
	630	6300										

		Upstream device													
Series		OptiMat D400 N/H (40/65 kA at Ue = 400 V)													
OptiMat D630 N/H (40/65 kA at Ue = 400 V)	In, A		160	180	200	220	240	260	280	300	320	340	360	380	400
		Isd, A	1600	1800	2000	2200	2400	2600	2800	3000	3200	3400	3600	3800	4000
	250	2500												5000	5000
	270	2700													
	290	2900													
	310	3100													
	330	3300													
	350	3500													
	370	3700													
	390	3900													
	410	4100													
	430	4300													
	450	4500													
	470	4700													
	490	4900													
	510	5100													
	530	5300													
	550	5500													
	570	5700													
	590	5900													
	610	6100													
	630	6300													

		Upstream device																				
Series		OptiMat D630 N/H (40/65 kA at Ue = 400 V)																				
OptiMat D630 N/H (40/65 kA at Ue = 400 V)	In, A		250	270	290	310	330	350	370	390	410	430	450	470	490	510	530	550	570	590	610	630
		Isd, A	2500	2700	2900	3100	3300	3500	3700	3900	4100	4300	4500	4700	4900	5100	5300	5500	5700	5900	6100	6300
	250	2500								7000	7000	7000	7000	7000	7000	7000	7000	7000	7000	7000	7000	7000
	270	2700									7000	7000	7000	7000	7000	7000	7000	7000	7000	7000	7000	7000
	290	2900											7000	7000	7000	7000	7000	7000	7000	7000	7000	7000
	310	3100												7000	7000	7000	7000	7000	7000	7000	7000	7000
	330	3300														7000	7000	7000	7000	7000	7000	7000
	350	3500															7000	7000	7000	7000	7000	7000
	370	3700																	7000	7000	7000	7000
	390	3900																		7000	7000	7000
	410	4100																				7000
	430	4300																				
	450	4500																				
	470	4700																				
	490	4900																				
	510	5100																				
	530	5300																				
	550	5500																				
	570	5700																				
	590	5900																				
	610	6100																				
	630	6300																				

		Upstream device													
Series		OptiMat D800 N/H (50/85 kA at Ue = 400 V)													
OptiMat D630 N/H (40/65 kA at Ue = 400 V)	In, A		320	360	400	440	480	520	560	600	640	680	720	760	800
		Isd, A	3200	3600	4000	4400	4800	5200	5600	6000	6400	6800	7200	7600	8000
	250	2500			9600	9600	9600	9600	9600	9600	9600	9600	9600	9600	9600
	270	2700				9600	9600	9600	9600	9600	9600	9600	9600	9600	9600
	290	2900				9600	9600	9600	9600	9600	9600	9600	9600	9600	9600
	310	3100					9600	9600	9600	9600	9600	9600	9600	9600	9600
	330	3300						9600	9600	9600	9600	9600	9600	9600	9600
	350	3500							9600	9600	9600	9600	9600	9600	9600
	370	3700							9600	9600	9600	9600	9600	9600	9600
	390	3900								9600	9600	9600	9600	9600	9600
	410	4100									9600	9600	9600	9600	9600
	430	4300										9600	9600	9600	9600
	450	4500										9600	9600	9600	9600
	470	4700											9600	9600	9600
	490	4900												9600	9600
	510	5100													9600
	530	5300													9600
	550	5500													
	570	5700													
	590	5900													
	610	6100													
	630	6300													

		Upstream device													
Series		OptiMat D1000 N/H (50/85 kA at Ue = 400 V)													
OptiMat D630 N/H (40/65 kA at Ue = 400 V)	In, A		400	450	500	550	600	650	700	750	800	850	900	950	1000
		Isd, A	4000	4500	5000	5500	6000	6500	7000	7500	8000	8500	9000	9500	10000
	250	2500	12000	12000	12000	12000	12000	12000	12000	12000	12000	12000	12000	12000	12000
	270	2700		12000	12000	12000	12000	12000	12000	12000	12000	12000	12000	12000	12000
	290	2900		12000	12000	12000	12000	12000	12000	12000	12000	12000	12000	12000	12000
	310	3100			12000	12000	12000	12000	12000	12000	12000	12000	12000	12000	12000
	330	3300			12000	12000	12000	12000	12000	12000	12000	12000	12000	12000	12000
	350	3500				12000	12000	12000	12000	12000	12000	12000	12000	12000	12000
	370	3700					12000	12000	12000	12000	12000	12000	12000	12000	12000
	390	3900					12000	12000	12000	12000	12000	12000	12000	12000	12000
	410	4100						12000	12000	12000	12000	12000	12000	12000	12000
	430	4300						12000	12000	12000	12000	12000	12000	12000	12000
	450	4500							12000	12000	12000	12000	12000	12000	12000
	470	4700								12000	12000	12000	12000	12000	12000
	490	4900								12000	12000	12000	12000	12000	12000
	510	5100									12000	12000	12000	12000	12000
	530	5300									12000	12000	12000	12000	12000
	550	5500										12000	12000	12000	12000
	570	5700											12000	12000	12000
	590	5900											12000	12000	12000
	610	6100												12000	12000
	630	6300												12000	12000

		Upstream device																
Series		OptiMat D1250 N/H (50/85 kA at Ue = 400 V)																
OptiMat D630 N/H (40/65 kA at Ue = 400 V)	In, A		500	550	600	650	700	750	800	850	900	950	1000	1050	1100	1150	1200	1250
		Isd, A	5000	5500	6000	6500	7000	7500	8000	8500	9000	9500	10000	10500	11000	11500	12000	12500
	250	2500	15000	15000	15000	15000	15000	15000	15000	15000	15000	15000	15000	15000	15000	15000	15000	15000
	270	2700	15000	15000	15000	15000	15000	15000	15000	15000	15000	15000	15000	15000	15000	15000	15000	15000
	290	2900	15000	15000	15000	15000	15000	15000	15000	15000	15000	15000	15000	15000	15000	15000	15000	15000
	310	3100	15000	15000	15000	15000	15000	15000	15000	15000	15000	15000	15000	15000	15000	15000	15000	15000
	330	3300	15000	15000	15000	15000	15000	15000	15000	15000	15000	15000	15000	15000	15000	15000	15000	15000
	350	3500		15000	15000	15000	15000	15000	15000	15000	15000	15000	15000	15000	15000	15000	15000	15000
	370	3700			15000	15000	15000	15000	15000	15000	15000	15000	15000	15000	15000	15000	15000	15000
	390	3900			15000	15000	15000	15000	15000	15000	15000	15000	15000	15000	15000	15000	15000	15000
	410	4100				15000	15000	15000	15000	15000	15000	15000	15000	15000	15000	15000	15000	15000
	430	4300				15000	15000	15000	15000	15000	15000	15000	15000	15000	15000	15000	15000	15000
	450	4500					15000	15000	15000	15000	15000	15000	15000	15000	15000	15000	15000	15000
	470	4700						15000	15000	15000	15000	15000	15000	15000	15000	15000	15000	15000
	490	4900						15000	15000	15000	15000	15000	15000	15000	15000	15000	15000	15000
	510	5100							15000	15000	15000	15000	15000	15000	15000	15000	15000	15000
	530	5300							15000	15000	15000	15000	15000	15000	15000	15000	15000	15000
	550	5500								15000	15000	15000	15000	15000	15000	15000	15000	15000
	570	5700									15000	15000	15000	15000	15000	15000	15000	15000
	590	5900									15000	15000	15000	15000	15000	15000	15000	15000
	610	6100										15000	15000	15000	15000	15000	15000	15000
	630	6300										15000	15000	15000	15000	15000	15000	15000

		Upstream device																	
Series		OptiMat D1600 N/H (50/85 kA at Ue = 400 V)																	
OptiMat D630 N/H (40/65 kA at Ue = 400 V)	In, A		640	700	760	820	880	940	1000	1060	1120	1180	1240	1300	1360	1420	1480	1540	1600
		Isd, A	6400	7000	7600	8200	8800	9400	10000	10600	11200	11800	12400	13000	13600	14200	14800	15400	16000
	250	2500	19200	19200	19200	19200	19200	19200	19200	19200	19200	19200	19200	19200	19200	19200	19200	19200	19200
	270	2700	19200	19200	19200	19200	19200	19200	19200	19200	19200	19200	19200	19200	19200	19200	19200	19200	19200
	290	2900	19200	19200	19200	19200	19200	19200	19200	19200	19200	19200	19200	19200	19200	19200	19200	19200	19200
	310	3100	19200	19200	19200	19200	19200	19200	19200	19200	19200	19200	19200	19200	19200	19200	19200	19200	19200
	330	3300	19200	19200	19200	19200	19200	19200	19200	19200	19200	19200	19200	19200	19200	19200	19200	19200	19200
	350	3500	19200	19200	19200	19200	19200	19200	19200	19200	19200	19200	19200	19200	19200	19200	19200	19200	19200
	370	3700	19200	19200	19200	19200	19200	19200	19200	19200	19200	19200	19200	19200	19200	19200	19200	19200	19200
	390	3900	19200	19200	19200	19200	19200	19200	19200	19200	19200	19200	19200	19200	19200	19200	19200	19200	19200
	410	4100	19200	19200	19200	19200	19200	19200	19200	19200	19200	19200	19200	19200	19200	19200	19200	19200	19200
	430	4300		19200	19200	19200	19200	19200	19200	19200	19200	19200	19200	19200	19200	19200	19200	19200	19200
	450	4500		19200	19200	19200	19200	19200	19200	19200	19200	19200	19200	19200	19200	19200	19200	19200	19200
	470	4700			19200	19200	19200	19200	19200	19200	19200	19200	19200	19200	19200	19200	19200	19200	19200
	490	4900			19200	19200	19200	19200	19200	19200	19200	19200	19200	19200	19200	19200	19200	19200	19200
	510	5100				19200	19200	19200	19200	19200	19200	19200	19200	19200	19200	19200	19200	19200	19200
	530	5300				19200	19200	19200	19200	19200	19200	19200	19200	19200	19200	19200	19200	19200	19200
	550	5500					19200	19200	19200	19200	19200	19200	19200	19200	19200	19200	19200	19200	19200
	570	5700					19200	19200	19200	19200	19200	19200	19200	19200	19200	19200	19200	19200	19200
	590	5900						19200	19200	19200	19200	19200	19200	19200	19200	19200	19200	19200	19200
	610	6100						19200	19200	19200	19200	19200	19200	19200	19200	19200	19200	19200	19200
	630	6300							19200	19200	19200	19200	19200	19200	19200	19200	19200	19200	19200

		Upstream device									
Series		OptiMat D100 N/H (40/65 kA at Ue = 400 V)									
OptiMat D800 N/H (50/85 kA at Ue = 400 V)	In, A		40	45	50	56	63	70	80	90	95	100
		Isd, A	400	450	500	560	630	700	800	900	950	1000
	320	3200										
	360	3600										
	400	4000										
	440	4400										
	480	4800										
	520	5200										
	560	5600										
	600	6000										
	640	6400										
	680	6800										
	720	7200										
	760	7600										
	800	8000										

		Upstream device									
Series		OptiMat D160 N/H (40/65 kA at Ue = 400 V)									
OptiMat D800 N/H (50/85 kA at Ue = 400 V)	In, A		64	72	80	89,6	100,8	112	128	144	152	160
		Isd, A	640	720	800	896	1008	1120	1280	1440	1520	1600
	320	3200										
	360	3600										
	400	4000										
	440	4400										
	480	4800										
	520	5200										
	560	5600										
	600	6000										
	640	6400										
	680	6800										
	720	7200										
	760	7600										
	800	8000										

		Upstream device									
Series		OptiMat D250 N/H (40/65 kA at Ue = 400 V)									
OptiMat D800 N/H (50/85 kA at Ue = 400 V)	In, A		100	112,5	125	140	157,5	175	200	225	237,5	250
		Isd, A	1000	1125	1250	1400	1575	1750	2000	2250	2375	2500
	320	3200										
	360	3600										
	400	4000										
	440	4400										
	480	4800										
	520	5200										
	560	5600										
	600	6000										
	640	6400										
	680	6800										
	720	7200										
	760	7600										
	800	8000										

		Upstream device													
Series		OptiMat D400 N/H (40/65 kA at Ue = 400 V)													
OptiMat D800 N/H (50/85 kA at Ue = 400 V)	In, A		160	180	200	220	240	260	280	300	320	340	360	380	400
		Isd, A	1600	1800	2000	2200	2400	2600	2800	3000	3200	3400	3600	3800	4000
	320	3200													
	360	3600													
	400	4000													
	440	4400													
	480	4800													
	520	5200													
	560	5600													
	600	6000													
	640	6400													
	680	6800													
	720	7200													
	760	7600													
	800	8000													

		Upstream device																				
Series		OptiMat D630 N/H (40/65 kA at Ue = 400 V)																				
OptiMat D800 N/H (50/85 kA at Ue = 400 V)	In, A		250	270	290	310	330	350	370	390	410	430	450	470	490	510	530	550	570	590	610	630
		Isd, A	2500	2700	2900	3100	3300	3500	3700	3900	4100	4300	4500	4700	4900	5100	5300	5500	5700	5900	6100	6300
	320	3200													7000	7000	7000	7000	7000	7000	7000	7000
	360	3600																7000	7000	7000	7000	7000
	400	4000																			7000	7000
	440	4400																				
	480	4800																				
	520	5200																				
	560	5600																				
	600	6000																				
	640	6400																				
	680	6800																				
	720	7200																				
	760	7600																				
	800	8000																				

		Upstream device													
Series		OptiMat D800 N/H (50/85 kA at Ue = 400 V)													
OptiMat D800 N/H (50/85 kA at Ue = 400 V)	In, A		320	360	400	440	480	520	560	600	640	680	720	760	800
		Isd, A	3200	3600	4000	4400	4800	5200	5600	6000	6400	6800	7200	7600	8000
	320	3200					9600	9600	9600	9600	9600	9600	9600	9600	9600
	360	3600							9600	9600	9600	9600	9600	9600	9600
	400	4000								9600	9600	9600	9600	9600	9600
	440	4400										9600	9600	9600	9600
	480	4800											9600	9600	9600
	520	5200													9600
	560	5600													
	600	6000													
	640	6400													
	680	6800													
	720	7200													
	760	7600													
	800	8000													

		Upstream device													
Series		OptiMat D1000 N/H (50/85 kA at Ue = 400 V)													
OptiMat D800 N/H (50/85 kA at Ue = 400 V)	In, A		400	450	500	550	600	650	700	750	800	850	900	950	1000
		Isd, A	4000	4500	5000	5500	6000	6500	7000	7500	8000	8500	9000	9500	10000
	320	3200			12000	12000	12000	12000	12000	12000	12000	12000	12000	12000	12000
	360	3600				12000	12000	12000	12000	12000	12000	12000	12000	12000	12000
	400	4000					12000	12000	12000	12000	12000	12000	12000	12000	12000
	440	4400							12000	12000	12000	12000	12000	12000	12000
	480	4800								12000	12000	12000	12000	12000	12000
	520	5200									12000	12000	12000	12000	12000
	560	5600										12000	12000	12000	12000
	600	6000											12000	12000	12000
	640	6400													12000
	680	6800													
	720	7200													
	760	7600													
	800	8000													

		Upstream device																
Series		OptiMat D1250 N/H (50/85 kA at Ue = 400 V)																
OptiMat D800 N/H (50/85 kA at Ue = 400 V)	In, A		500	550	600	650	700	750	800	850	900	950	1000	1050	1100	1150	1200	1250
		Isd, A	5000	5500	6000	6500	7000	7500	8000	8500	9000	9500	10000	10500	11000	11500	12000	12500
	320	3200	15000	15000	15000	15000	15000	15000	15000	15000	15000	15000	15000	15000	15000	15000	15000	15000
	360	3600		15000	15000	15000	15000	15000	15000	15000	15000	15000	15000	15000	15000	15000	15000	15000
	400	4000			15000	15000	15000	15000	15000	15000	15000	15000	15000	15000	15000	15000	15000	15000
	440	4400					15000	15000	15000	15000	15000	15000	15000	15000	15000	15000	15000	15000
	480	4800						15000	15000	15000	15000	15000	15000	15000	15000	15000	15000	15000
	520	5200							15000	15000	15000	15000	15000	15000	15000	15000	15000	15000
	560	5600								15000	15000	15000	15000	15000	15000	15000	15000	15000
	600	6000									15000	15000	15000	15000	15000	15000	15000	15000
	640	6400											15000	15000	15000	15000	15000	15000
	680	6800												15000	15000	15000	15000	15000
	720	7200													15000	15000	15000	15000
	760	7600														15000	15000	15000
	800	8000															15000	15000

		Upstream device																	
Series		OptiMat D1600 N/H (50/85 kA at Ue = 400 V)																	
OptiMat D800 N/H (50/85 kA at Ue = 400 V)	In, A		640	700	760	820	880	940	1000	1060	1120	1180	1240	1300	1360	1420	1480	1540	1600
		Isd, A	6400	7000	7600	8200	8800	9400	10000	10600	11200	11800	12400	13000	13600	14200	14800	15400	16000
	320	3200	19200	19200	19200	19200	19200	19200	19200	19200	19200	19200	19200	19200	19200	19200	19200	19200	19200
	360	3600	19200	19200	19200	19200	19200	19200	19200	19200	19200	19200	19200	19200	19200	19200	19200	19200	19200
	400	4000	19200	19200	19200	19200	19200	19200	19200	19200	19200	19200	19200	19200	19200	19200	19200	19200	19200
	440	4400		19200	19200	19200	19200	19200	19200	19200	19200	19200	19200	19200	19200	19200	19200	19200	19200
	480	4800			19200	19200	19200	19200	19200	19200	19200	19200	19200	19200	19200	19200	19200	19200	19200
	520	5200				19200	19200	19200	19200	19200	19200	19200	19200	19200	19200	19200	19200	19200	19200
	560	5600					19200	19200	19200	19200	19200	19200	19200	19200	19200	19200	19200	19200	19200
	600	6000						19200	19200	19200	19200	19200	19200	19200	19200	19200	19200	19200	19200
	640	6400							19200	19200	19200	19200	19200	19200	19200	19200	19200	19200	19200
	680	6800								19200	19200	19200	19200	19200	19200	19200	19200	19200	19200
	720	7200									19200	19200	19200	19200	19200	19200	19200	19200	19200
	760	7600										19200	19200	19200	19200	19200	19200	19200	19200
	800	8000											19200	19200	19200	19200	19200	19200	19200

		Upstream device										
Series		OptiMat D100 N/H (40/65 kA at Ue = 400 V)										
OptiMat D1000 N/H (50/85 kA at Ue = 400 V)	In, A		40	45	50	56	63	70	80	90	95	100
		Isd, A	400	450	500	560	630	700	800	900	950	1000
	400	4000										
	450	4500										
	500	5000										
	550	5500										
	600	6000										
	650	6500										
	700	7000										
	750	7500										
	800	8000										
	850	8500										
	900	9000										
	950	9500										
	1000	10000										

		Upstream device										
Series		OptiMat D160 N/H (40/65 kA at Ue = 400 V)										
OptiMat D1000 N/H (50/85 kA at Ue = 400 V)	In, A		64	72	80	89,6	100,8	112	128	144	152	160
		Isd, A	640	720	800	896	1008	1120	1280	1440	1520	1600
	400	4000										
	450	4500										
	500	5000										
	550	5500										
	600	6000										
	650	6500										
	700	7000										
	750	7500										
	800	8000										
	850	8500										
	900	9000										
	950	9500										
	1000	10000										

		Upstream device										
Series		OptiMat D250 N/H (40/65 kA at Ue = 400 V)										
OptiMat D1000 N/H (50/85 kA at Ue = 400 V)	In, A		100	112,5	125	140	157,5	175	200	225	237,5	250
		Isd, A	1000	1125	1250	1400	1575	1750	2000	2250	2375	2500
	400	4000										
	450	4500										
	500	5000										
	550	5500										
	600	6000										
	650	6500										
	700	7000										
	750	7500										
	800	8000										
	850	8500										
	900	9000										
	950	9500										
	1000	10000										

		Upstream device													
Series		OptiMat D400 N/H (40/65 kA at Ue = 400 V)													
OptiMat D1000 N/H (50/85 kA at Ue = 400 V)	In, A		160	180	200	220	240	260	280	300	320	340	360	380	400
		Isd, A	1600	1800	2000	2200	2400	2600	2800	3000	3200	3400	3600	3800	4000
	400	4000													
	450	4500													
	500	5000													
	550	5500													
	600	6000													
	650	6500													
	700	7000													
	750	7500													
	800	8000													
	850	8500													
	900	9000													
	950	9500													
	1000	10000													

		Upstream device																				
Series		OptiMat D630 N/H (40/65 kA at Ue = 400 V)																				
OptiMat D1000 N/H (50/85 kA at Ue = 400 V)	In, A		250	270	290	310	330	350	370	390	410	430	450	470	490	510	530	550	570	590	610	630
		Isd, A	2500	2700	2900	3100	3300	3500	3700	3900	4100	4300	4500	4700	4900	5100	5300	5500	5700	5900	6100	6300
	400	4000																			7000	7000
	450	4500																				
	500	5000																				
	550	5500																				
	600	6000																				
	650	6500																				
	700	7000																				
	750	7500																				
	800	8000																				
	850	8500																				
	900	9000																				
	950	9500																				
	1000	10000																				

		Upstream device													
Series		OptiMat D800 N/H (50/85 kA at Ue = 400 V)													
OptiMat D1000 N/H (50/85 kA at Ue = 400 V)	In, A		320	360	400	440	480	520	560	600	640	680	720	760	800
		Isd, A	3200	3600	4000	4400	4800	5200	5600	6000	6400	6800	7200	7600	8000
	400	4000								9600	9600	9600	9600	9600	9600
	450	4500										9600	9600	9600	9600
	500	5000												9600	9600
	550	5500													
	600	6000													
	650	6500													
	700	7000													
	750	7500													
	800	8000													
	850	8500													
	900	9000													
	950	9500													
	1000	10000													

		Upstream device													
Series		OptiMat D1000 N/H (50/85 kA at Ue = 400 V)													
OptiMat D1000 N/H (50/85 kA at Ue = 400 V)	In, A		400	450	500	550	600	650	700	750	800	850	900	950	1000
		Isd, A	4000	4500	5000	5500	6000	6500	7000	7500	8000	8500	9000	9500	10000
	400	4000					12000	12000	12000	12000	12000	12000	12000	12000	12000
	450	4500							12000	12000	12000	12000	12000	12000	12000
	500	5000								12000	12000	12000	12000	12000	12000
	550	5500										12000	12000	12000	12000
	600	6000											12000	12000	12000
	650	6500													12000
	700	7000													
	750	7500													
	800	8000													
	850	8500													
	900	9000													
	950	9500													
	1000	10000													

		Upstream device																
Series		OptiMat D1250 N/H (50/85 kA at Ue = 400 V)																
OptiMat D1000 N/H (50/85 kA at Ue = 400 V)	In, A		500	550	600	650	700	750	800	850	900	950	1000	1050	1100	1150	1200	1250
		Isd, A	5000	5500	6000	6500	7000	7500	8000	8500	9000	9500	10000	10500	11000	11500	12000	12500
	400	4000			15000	15000	15000	15000	15000	15000	15000	15000	15000	15000	15000	15000	15000	15000
	450	4500					15000	15000	15000	15000	15000	15000	15000	15000	15000	15000	15000	15000
	500	5000						15000	15000	15000	15000	15000	15000	15000	15000	15000	15000	15000
	550	5500								15000	15000	15000	15000	15000	15000	15000	15000	15000
	600	6000									15000	15000	15000	15000	15000	15000	15000	15000
	650	6500											15000	15000	15000	15000	15000	15000
	700	7000												15000	15000	15000	15000	15000
	750	7500														15000	15000	15000
	800	8000															15000	15000
	850	8500																
	900	9000																
	950	9500																
	1000	10000																

		Upstream device																	
Series		OptiMat D1600 N/H (50/85 kA at Ue = 400 V)																	
OptiMat D1000 N/H (50/85 kA at Ue = 400 V)	In, A		640	700	760	820	880	940	1000	1060	1120	1180	1240	1300	1360	1420	1480	1540	1600
		Isd, A	6400	7000	7600	8200	8800	9400	10000	10600	11200	11800	12400	13000	13600	14200	14800	15400	16000
	400	4000	19200	19200	19200	19200	19200	19200	19200	19200	19200	19200	19200	19200	19200	19200	19200	19200	19200
	450	4500		19200	19200	19200	19200	19200	19200	19200	19200	19200	19200	19200	19200	19200	19200	19200	19200
	500	5000			19200	19200	19200	19200	19200	19200	19200	19200	19200	19200	19200	19200	19200	19200	19200
	550	5500					19200	19200	19200	19200	19200	19200	19200	19200	19200	19200	19200	19200	19200
	600	6000						19200	19200	19200	19200	19200	19200	19200	19200	19200	19200	19200	19200
	650	6500							19200	19200	19200	19200	19200	19200	19200	19200	19200	19200	19200
	700	7000								19200	19200	19200	19200	19200	19200	19200	19200	19200	19200
	750	7500										19200	19200	19200	19200	19200	19200	19200	19200
	800	8000											19200	19200	19200	19200	19200	19200	19200
	850	8500												19200	19200	19200	19200	19200	19200
	900	9000													19200	19200	19200	19200	19200
	950	9500															19200	19200	19200
	1000	10000																19200	19200

		Upstream device									
Series		OptiMat D100 N/H (40/65 kA at Ue = 400 V)									
OptiMat D1250 N/H (50/85 kA at Ue = 400 V)	In, A		40	45	50	56	63	70	80	90	95	100
		Isd, A	400	450	500	560	630	700	800	900	950	1000
	500	5000										
	550	5500										
	600	6000										
	650	6500										
	700	7000										
	750	7500										
	800	8000										
	850	8500										
	900	9000										
	950	9500										
	1000	10000										
	1050	10500										
	1100	11000										
	1150	11500										
	1200	12000										
	1250	12500										

		Upstream device										
Series		OptiMat D160 N/H (40/65 kA at Ue = 400 V)										
OptiMat D1250 N/H (50/85 kA at Ue = 400 V)	In, A		64	72	80	89,6	100,8	112	128	144	152	160
		Isd, A	640	720	800	896	1008	1120	1280	1440	1520	1600
	500	5000										
	550	5500										
	600	6000										
	650	6500										
	700	7000										
	750	7500										
	800	8000										
	850	8500										
	900	9000										
	950	9500										
	1000	10000										
	1050	10500										
	1100	11000										
	1150	11500										
	1200	12000										
	1250	12500										

		Upstream device										
Series		OptiMat D250 N/H (40/65 kA at Ue = 400 V)										
OptiMat D1250 N/H (50/85 kA at Ue = 400 V)	In, A		100	112,5	125	140	157,5	175	200	225	237,5	250
		Isd, A	1000	1125	1250	1400	1575	1750	2000	2250	2375	2500
	500	5000										
	550	5500										
	600	6000										
	650	6500										
	700	7000										
	750	7500										
	800	8000										
	850	8500										
	900	9000										
	950	9500										
	1000	10000										
	1050	10500										
	1100	11000										
	1150	11500										
	1200	12000										
	1250	12500										

		Upstream device													
Series		OptiMat D400 N/H (40/65 kA at Ue = 400 V)													
OptiMat D1250 N/H (50/85 kA at Ue = 400 V)	In, A		160	180	200	220	240	260	280	300	320	340	360	380	400
		Isd, A	1600	1800	2000	2200	2400	2600	2800	3000	3200	3400	3600	3800	4000
	500	5000													
	550	5500													
	600	6000													
	650	6500													
	700	7000													
	750	7500													
	800	8000													
	850	8500													
	900	9000													
	950	9500													
	1000	10000													
	1050	10500													
	1100	11000													
	1150	11500													
	1200	12000													
	1250	12500													

		Upstream device																				
Series		OptiMat D630 N/H (40/65 kA at Ue = 400 V)																				
OptiMat D1250 N/H (50/85 kA at Ue = 400 V)	In, A		250	270	290	310	330	350	370	390	410	430	450	470	490	510	530	550	570	590	610	630
		Isd, A	2500	2700	2900	3100	3300	3500	3700	3900	4100	4300	4500	4700	4900	5100	5300	5500	5700	5900	6100	6300
	500	5000																				
	550	5500																				
	600	6000																				
	650	6500																				
	700	7000																				
	750	7500																				
	800	8000																				
	850	8500																				
	900	9000																				
	950	9500																				
	1000	10000																				
	1050	10500																				
	1100	11000																				
	1150	11500																				
	1200	12000																				
	1250	12500																				

		Upstream device													
Series		OptiMat D800 N/H (50/85 kA at Ue = 400 V)													
OptiMat D1250 N/H (50/85 kA at Ue = 400 V)	In, A		320	360	400	440	480	520	560	600	640	680	720	760	800
		Isd, A	3200	3600	4000	4400	4800	5200	5600	6000	6400	6800	7200	7600	8000
	500	5000												9600	9600
	550	5500													
	600	6000													
	650	6500													
	700	7000													
	750	7500													
	800	8000													
	850	8500													
	900	9000													
	950	9500													
	1000	10000													
	1050	10500													
	1100	11000													
	1150	11500													
	1200	12000													
	1250	12500													

		Upstream device													
Series		OptiMat D1000 N/H (50/85 kA at Ue = 400 V)													
OptiMat D1250 N/H (50/85 kA at Ue = 400 V)	In, A		400	450	500	550	600	650	700	750	800	850	900	950	1000
		Isd, A	4000	4500	5000	5500	6000	6500	7000	7500	8000	8500	9000	9500	10000
	500	5000								12000	12000	12000	12000	12000	12000
	550	5500										12000	12000	12000	12000
	600	6000											12000	12000	12000
	650	6500													12000
	700	7000													
	750	7500													
	800	8000													
	850	8500													
	900	9000													
	950	9500													
	1000	10000													
	1050	10500													
	1100	11000													
	1150	11500													
	1200	12000													
	1250	12500													

		Upstream device																
Series		OptiMat D1250 N/H (50/85 kA at Ue = 400 V)																
OptiMat D1250 N/H (50/85 kA at Ue = 400 V)	In, A		500	550	600	650	700	750	800	850	900	950	1000	1050	1100	1150	1200	1250
		Isd, A	5000	5500	6000	6500	7000	7500	8000	8500	9000	9500	10000	10500	11000	11500	12000	12500
	500	5000						15000	15000	15000	15000	15000	15000	15000	15000	15000	15000	15000
	550	5500								15000	15000	15000	15000	15000	15000	15000	15000	15000
	600	6000									15000	15000	15000	15000	15000	15000	15000	15000
	650	6500											15000	15000	15000	15000	15000	15000
	700	7000												15000	15000	15000	15000	15000
	750	7500														15000	15000	15000
	800	8000															15000	15000
	850	8500																
	900	9000																
	950	9500																
	1000	10000																
	1050	10500																
	1100	11000																
	1150	11500																
	1200	12000																
	1250	12500																

		Upstream device																	
Series		OptiMat D1600 N/H (50/85 kA at Ue = 400 V)																	
OptiMat D1250 N/H (50/85 kA at Ue = 400 V)	In, A		640	700	760	820	880	940	1000	1060	1120	1180	1240	1300	1360	1420	1480	1540	1600
		Isd, A	6400	7000	7600	8200	8800	9400	10000	10600	11200	11800	12400	13000	13600	14200	14800	15400	16000
	500	5000			19200	19200	19200	19200	19200	19200	19200	19200	19200	19200	19200	19200	19200	19200	19200
	550	5500					19200	19200	19200	19200	19200	19200	19200	19200	19200	19200	19200	19200	19200
	600	6000						19200	19200	19200	19200	19200	19200	19200	19200	19200	19200	19200	19200
	650	6500							19200	19200	19200	19200	19200	19200	19200	19200	19200	19200	19200
	700	7000								19200	19200	19200	19200	19200	19200	19200	19200	19200	19200
	750	7500										19200	19200	19200	19200	19200	19200	19200	19200
	800	8000											19200	19200	19200	19200	19200	19200	19200
	850	8500												19200	19200	19200	19200	19200	19200
	900	9000													19200	19200	19200	19200	19200
	950	9500															19200	19200	19200
	1000	10000																19200	19200
	1050	10500																	19200
	1100	11000																	
	1150	11500																	
	1200	12000																	
	1250	12500																	

		Upstream device									
Series		OptiMat D100 N/H (40/65 kA at Ue = 400 V)									
OptiMat D1600 N/H (50/85 kA at Ue = 400 V)	In, A		40	45	50	56	63	70	80	90	95	100
		Isd, A	400	450	500	560	630	700	800	900	950	1000
	640	6400										
	700	7000										
	760	7600										
	820	8200										
	880	8800										
	940	9400										
	1000	10000										
	1060	10600										
	1120	11200										
	1180	11800										
	1240	12400										
	1300	13000										
	1360	13600										
	1420	14200										
	1480	14800										
	1540	15400										
	1600	16000										

		Upstream device									
Series		OptiMat D160 N/H (40/65 kA at Ue = 400 V)									
OptiMat D1600 N/H (50/85 kA at Ue = 400 V)	In, A		64	72	80	89,6	100,8	112	128	144	152	160
		Isd, A	640	720	800	896	1008	1120	1280	1440	1520	1600
	640	6400										
	700	7000										
	760	7600										
	820	8200										
	880	8800										
	940	9400										
	1000	10000										
	1060	10600										
	1120	11200										
	1180	11800										
	1240	12400										
	1300	13000										
	1360	13600										
	1420	14200										
	1480	14800										
	1540	15400										
	1600	16000										

		Upstream device									
Series		OptiMat D250 N/H (40/65 kA at Ue = 400 V)									
OptiMat D1600 N/H (50/85 kA at Ue = 400 V)	In, A		100	112,5	125	140	157,5	175	200	225	237,5	250
		Isd, A	1000	1125	1250	1400	1575	1750	2000	2250	2375	2500
	640	6400										
	700	7000										
	760	7600										
	820	8200										
	880	8800										
	940	9400										
	1000	10000										
	1060	10600										
	1120	11200										
	1180	11800										
	1240	12400										
	1300	13000										
	1360	13600										
	1420	14200										
	1480	14800										
	1540	15400										
	1600	16000										

		Upstream device													
Series		OptiMat D400 N/H (40/65 kA at Ue = 400 V)													
OptiMat D1600 N/H (50/85 kA at Ue = 400 V)	In, A		160	180	200	220	240	260	280	300	320	340	360	380	400
		Isd, A	1600	1800	2000	2200	2400	2600	2800	3000	3200	3400	3600	3800	4000
	640	6400													
	700	7000													
	760	7600													
	820	8200													
	880	8800													
	940	9400													
	1000	10000													
	1060	10600													
	1120	11200													
	1180	11800													
	1240	12400													
	1300	13000													
	1360	13600													
	1420	14200													
	1480	14800													
	1540	15400													
	1600	16000													

		Upstream device																			
Series		OptiMat D630 N/H (40/65 kA at Ue = 400 V)																			
OptiMat D1600 N/H (50/85 kA at Ue = 400 V)	In, A		250	270	290	310	330	350	370	390	410	430	450	470	490	510	530	550	570	590	610	630
		Isd, A	2500	2700	2900	3100	3300	3500	3700	3900	4100	4300	4500	4700	4900	5100	5300	5500	5700	5900	6100	6300
	640	6400																			
	700	7000																			
	760	7600																			
	820	8200																			
	880	8800																			
	940	9400																			
	1000	10000																			
	1060	10600																			
	1120	11200																			
	1180	11800																			
	1240	12400																			
	1300	13000																			
	1360	13600																			
	1420	14200																			
	1480	14800																			
	1540	15400																			
	1600	16000																			

		Upstream device													
Series		OptiMat D800 N/H (50/85 kA at Ue = 400 V)													
OptiMat D1600 N/H (50/85 kA at Ue = 400 V)	In, A		320	360	400	440	480	520	560	600	640	680	720	760	800
		Isd, A	3200	3600	4000	4400	4800	5200	5600	6000	6400	6800	7200	7600	8000
	640	6400													
	700	7000													
	760	7600													
	820	8200													
	880	8800													
	940	9400													
	1000	10000													
	1060	10600													
	1120	11200													
	1180	11800													
	1240	12400													
	1300	13000													
	1360	13600													
	1420	14200													
	1480	14800													
	1540	15400													
	1600	16000													

		Upstream device													
Series		OptiMat D1000 N/H (50/85 kA at Ue = 400 V)													
OptiMat D1600 N/H (50/85 kA at Ue = 400 V)	In, A		400	450	500	550	600	650	700	750	800	850	900	950	1000
		Isd, A	4000	4500	5000	5500	6000	6500	7000	7500	8000	8500	9000	9500	10000
	640	6400													12000
	700	7000													
	760	7600													
	820	8200													
	880	8800													
	940	9400													
	1000	10000													
	1060	10600													
	1120	11200													
	1180	11800													
	1240	12400													
	1300	13000													
	1360	13600													
	1420	14200													
	1480	14800													
	1540	15400													
	1600	16000													

		Upstream device																
Series		OptiMat D1250 N/H (50/85 kA at Ue = 400 V)																
OptiMat D1600 N/H (50/85 kA at Ue = 400 V)	In, A		500	550	600	650	700	750	800	850	900	950	1000	1050	1100	1150	1200	1250
		Isd, A	5000	5500	6000	6500	7000	7500	8000	8500	9000	9500	10000	10500	11000	11500	12000	12500
	640	6400											15000	15000	15000	15000	15000	15000
	700	7000												15000	15000	15000	15000	15000
	760	7600														15000	15000	15000
	820	8200																15000
	880	8800																
	940	9400																
	1000	10000																
	1060	10600																
	1120	11200																
	1180	11800																
	1240	12400																
	1300	13000																
	1360	13600																
	1420	14200																
	1480	14800																
	1540	15400																
	1600	16000																

		Upstream device																
Series		OptiMat D1600 N/H (50/85 kA at Ue = 400 V)																
OptiMat D1600 N/H (50/85 kA at Ue = 400 V)	In, A		640	700	760	820	880	940	1000	1060	1120	1180	1240	1300	1360	1420	1480	1540	1600
		Isd, A	6400	7000	7600	8200	8800	9400	10000	10600	11200	11800	12400	13000	13600	14200	14800	15400	16000
	640	6400							19200	19200	19200	19200	19200	19200	19200	19200	19200	19200	19200
	700	7000								19200	19200	19200	19200	19200	19200	19200	19200	19200	19200
	760	7600										19200	19200	19200	19200	19200	19200	19200	19200
	820	8200											19200	19200	19200	19200	19200	19200	19200
	880	8800													19200	19200	19200	19200	19200
	940	9400														19200	19200	19200	19200
	1000	10000																19200	19200
	1060	10600																	19200
	1120	11200																	
	1180	11800																	
	1240	12400																	
	1300	13000																	
	1360	13600																	
	1420	14200																	
	1480	14800																	
	1540	15400																	
	1600	16000																	

Примечание: 1200 Selectivity current limit Is = 1200 A
Selectivity not ensured

OptiMat D-TM

					Upstream device																			
Series					OptiMat D250-TM016				OptiMat D250-TM020				OptiMat D250-TM025				OptiMat D250-TM032				OptiMat D250-TM040			
OptiMat D250-TM016	In, A				16	16	16	16	20	20	20	20	25	25	25	25	32	32	32	32	40	40	40	40
		Setpoint			0,7	0,8	0,9	1	0,7	0,8	0,9	1	0,7	0,8	0,9	1	0,7	0,8	0,9	1	0,7	0,8	0,9	1
			Ir, A		11,2	12,8	14,4	16	14	16	18	20	17,5	20	22,5	25	22,4	25,6	28,8	32	28	32	36	40
				Isd, A	160	160	160	160	200	200	200	200	250	250	250	250	320	320	320	320	400	400	400	400
	16	0,7	11,2	160													256	256	256	256	320	320	320	320
	16	0,8	12,8	160													256	256	256	256	320	320	320	320
	16	0,9	14,4	160														256	256	256	320	320	320	320
	16	1	16	160														256	256	256	320	320	320	320

					Upstream device															
Series					OptiMat D250-TM050				OptiMat D250-TM063				OptiMat D250-TM080				OptiMat D250-TM100			
OptiMat D250-TM016	In, A				50	50	50	50	63	63	63	63	80	80	80	80	100	100	100	100
		Setpoint			0,7	0,8	0,9	1	0,7	0,8	0,9	1	0,7	0,8	0,9	1	0,7	0,8	0,9	1
			Ir, A		35	40	45	50	44,1	50,4	56,7	63	56	64	72	80	70	80	90	100
				Isd, A	500	500	500	500	630	630	630	630	800	800	800	800	1000	1000	1000	1000
	16	0,7	11,2	160	400	400	400	400	504	504	504	504	640	640	640	640	800	800	800	800
	16	0,8	12,8	160	400	400	400	400	504	504	504	504	640	640	640	640	800	800	800	800
	16	0,9	14,4	160	400	400	400	400	504	504	504	504	640	640	640	640	800	800	800	800
	16	1	16	160	400	400	400	400	504	504	504	504	640	640	640	640	800	800	800	800

					Upstream device															
Series					OptiMat D250-TM125				OptiMat D250-TM160				OptiMat D250-TM200				OptiMat D250-TM250			
OptiMat D250-TM016	In, A				125	125	125	125	160	160	160	160	200	200	200	200	250	250	250	250
		Setpoint			0,7	0,8	0,9	1	0,7	0,8	0,9	1	0,7	0,8	0,9	1	0,7	0,8	0,9	1
			Ir, A		87,5	100	112,5	125	112	128	144	160	140	160	180	200	175	200	225	250
				Isd, A	1250	1250	1250	1250	1600	1600	1600	1600	2000	2000	2000	2000	2500	2500	2500	2500
	16	0,7	11,2	160	1000	1000	1000	1000	1280	1280	1280	1280	1600	1600	1600	1600	2000	2000	2000	2000
	16	0,8	12,8	160	1000	1000	1000	1000	1280	1280	1280	1280	1600	1600	1600	1600	2000	2000	2000	2000
	16	0,9	14,4	160	1000	1000	1000	1000	1280	1280	1280	1280	1600	1600	1600	1600	2000	2000	2000	2000
	16	1	16	160	1000	1000	1000	1000	1280	1280	1280	1280	1600	1600	1600	1600	2000	2000	2000	2000

					Upstream device															
Series					OptiMat D630-TM320				OptiMat D630-TM400				OptiMat D630-TM500				OptiMat D630-TM630			
OptiMat D250-TM016	In, A				320	320	320	320	400	400	400	400	500	500	500	500	630	630	630	630
		Setpoint			0,7	0,8	0,9	1	0,7	0,8	0,9	1	0,7	0,8	0,9	1	0,7	0,8	0,9	1
			Ir, A		224	256	288	320	280	320	360	400	350	400	450	500	441	504	567	630
				Isd, A	3200	3200	3200	3200	4000	4000	4000	4000	5000	5000	5000	5000	6300	6300	6300	6300
	16	0,7	11,2	160	2560	2560	2560	2560	3200	3200	3200	3200	4000	4000	4000	4000	5040	5040	5040	5040
	16	0,8	12,8	160	2560	2560	2560	2560	3200	3200	3200	3200	4000	4000	4000	4000	5040	5040	5040	5040
	16	0,9	14,4	160	2560	2560	2560	2560	3200	3200	3200	3200	4000	4000	4000	4000	5040	5040	5040	5040
	16	1	16	160	2560	2560	2560	2560	3200	3200	3200	3200	4000	4000	4000	4000	5040	5040	5040	5040

					Upstream device																			
Series					OptiMat D250-TM016				OptiMat D250-TM020				OptiMat D250-TM025				OptiMat D250-TM032				OptiMat D250-TM040			
OptiMat D250-TM020	In, A				16	16	16	16	20	20	20	20	25	25	25	25	32	32	32	32	40	40	40	40
		Setpoint			0,7	0,8	0,9	1	0,7	0,8	0,9	1	0,7	0,8	0,9	1	0,7	0,8	0,9	1	0,7	0,8	0,9	1
			Ir, A		11,2	12,8	14,4	16	14	16	18	20	17,5	20	22,5	25	22,4	25,6	28,8	32	28	32	36	40
				Isd, A	160	160	160	160	200	200	200	200	250	250	250	250	320	320	320	320	400	400	400	400
	20	0,7	14	200																	320	320	320	320
	20	0,8	16	200																	320	320	320	320
	20	0,9	18	200																		320	320	320
	20	1	20	200																		320	320	320

					Upstream device															
Series					OptiMat D250-TM050				OptiMat D250-TM063				OptiMat D250-TM080				OptiMat D250-TM100			
OptiMat D250-TM020	In, A				50	50	50	50	63	63	63	63	80	80	80	80	100	100	100	100
		Setpoint			0,7	0,8	0,9	1	0,7	0,8	0,9	1	0,7	0,8	0,9	1	0,7	0,8	0,9	1
			Ir, A		35	40	45	50	44,1	50,4	56,7	63	56	64	72	80	70	80	90	100
				Isd, A	500	500	500	500	630	630	630	630	800	800	800	800	1000	1000	1000	1000
	20	0,7	14	200	400	400	400	400	504	504	504	504	640	640	640	640	800	800	800	800
	20	0,8	16	200	400	400	400	400	504	504	504	504	640	640	640	640	800	800	800	800
	20	0,9	18	200	400	400	400	400	504	504	504	504	640	640	640	640	800	800	800	800
	20	1	20	200	400	400	400	400	504	504	504	504	640	640	640	640	800	800	800	800

					Upstream device															
Series					OptiMat D250-TM125				OptiMat D250-TM160				OptiMat D250-TM200				OptiMat D250-TM250			
OptiMat D250-TM020	In, A				125	125	125	125	160	160	160	160	200	200	200	200	250	250	250	250
		Setpoint			0,7	0,8	0,9	1	0,7	0,8	0,9	1	0,7	0,8	0,9	1	0,7	0,8	0,9	1
			Ir, A		87,5	100	112,5	125	112	128	144	160	140	160	180	200	175	200	225	250
				Isd, A	1250	1250	1250	1250	1600	1600	1600	1600	2000	2000	2000	2000	2500	2500	2500	2500
	20	0,7	14	200	1000	1000	1000	1000	1280	1280	1280	1280	1600	1600	1600	1600	2000	2000	2000	2000
	20	0,8	16	200	1000	1000	1000	1000	1280	1280	1280	1280	1600	1600	1600	1600	2000	2000	2000	2000
	20	0,9	18	200	1000	1000	1000	1000	1280	1280	1280	1280	1600	1600	1600	1600	2000	2000	2000	2000
	20	1	20	200	1000	1000	1000	1000	1280	1280	1280	1280	1600	1600	1600	1600	2000	2000	2000	2000

					Upstream device															
Series					OptiMat D630-TM320				OptiMat D630-TM400				OptiMat D630-TM500				OptiMat D630-TM630			
OptiMat D250-TM020	In, A				320	320	320	320	400	400	400	400	500	500	500	500	630	630	630	630
		Setpoint			0,7	0,8	0,9	1	0,7	0,8	0,9	1	0,7	0,8	0,9	1	0,7	0,8	0,9	1
			Ir, A		224	256	288	320	280	320	360	400	350	400	450	500	441	504	567	630
				Isd, A	3200	3200	3200	3200	4000	4000	4000	4000	5000	5000	5000	5000	6300	6300	6300	6300
	20	0,7	14	200	2560	2560	2560	2560	3200	3200	3200	3200	4000	4000	4000	4000	5040	5040	5040	5040
	20	0,8	16	200	2560	2560	2560	2560	3200	3200	3200	3200	4000	4000	4000	4000	5040	5040	5040	5040
	20	0,9	18	200	2560	2560	2560	2560	3200	3200	3200	3200	4000	4000	4000	4000	5040	5040	5040	5040
	20	1	20	200	2560	2560	2560	2560	3200	3200	3200	3200	4000	4000	4000	4000	5040	5040	5040	5040

					Upstream device															
Series					OptiMat D250-TM016				OptiMat D250-TM020				OptiMat D250-TM025				OptiMat D250-TM032				OptiMat D250-TM040			
OptiMat D250-TM025	In, A				16	16	16	16	20	20	20	20	25	25	25	25	32	32	32	32	40	40	40	40
		Setpoint			0,7	0,8	0,9	1	0,7	0,8	0,9	1	0,7	0,8	0,9	1	0,7	0,8	0,9	1	0,7	0,8	0,9	1
			Ir, A		11,2	12,8	14,4	16	14	16	18	20	17,5	20	22,5	25	22,4	25,6	28,8	32	28	32	36	40
				Isd, A	160	160	160	160	200	200	200	200	250	250	250	250	320	320	320	320	400	400	400	400
	25	0,7	17,5	250																				
	25	0,8	20	250																				
	25	0,9	22,5	250																				
	25	1	25	250																				

					Upstream device															
Series					OptiMat D250-TM050				OptiMat D250-TM063				OptiMat D250-TM080				OptiMat D250-TM100			
OptiMat D250-TM025	In, A				50	50	50	50	63	63	63	63	80	80	80	80	100	100	100	100
		Setpoint			0,7	0,8	0,9	1	0,7	0,8	0,9	1	0,7	0,8	0,9	1	0,7	0,8	0,9	1
			Ir, A		35	40	45	50	44,1	50,4	56,7	63	56	64	72	80	70	80	90	100
				Isd, A	500	500	500	500	630	630	630	630	800	800	800	800	1000	1000	1000	1000
	25	0,7	17,5	250	400	400	400	400	504	504	504	504	640	640	640	640	800	800	800	800
	25	0,8	20	250	400	400	400	400	504	504	504	504	640	640	640	640	800	800	800	800
	25	0,9	22,5	250		400	400	400	504	504	504	504	640	640	640	640	800	800	800	800
	25	1	25	250		400	400	400	504	504	504	504	640	640	640	640	800	800	800	800

					Upstream device															
Series					OptiMat D250-TM125				OptiMat D250-TM160				OptiMat D250-TM200				OptiMat D250-TM250			
OptiMat D250-TM025	In, A				125	125	125	125	160	160	160	160	200	200	200	200	250	250	250	250
		Setpoint			0,7	0,8	0,9	1	0,7	0,8	0,9	1	0,7	0,8	0,9	1	0,7	0,8	0,9	1
			Ir, A		87,5	100	112,5	125	112	128	144	160	140	160	180	200	175	200	225	250
				Isd, A	1250	1250	1250	1250	1600	1600	1600	1600	2000	2000	2000	2000	2500	2500	2500	2500
	25	0,7	17,5	250	1000	1000	1000	1000	1280	1280	1280	1280	1600	1600	1600	1600	2000	2000	2000	2000
	25	0,8	20	250	1000	1000	1000	1000	1280	1280	1280	1280	1600	1600	1600	1600	2000	2000	2000	2000
	25	0,9	22,5	250	1000	1000	1000	1000	1280	1280	1280	1280	1600	1600	1600	1600	2000	2000	2000	2000
	25	1	25	250	1000	1000	1000	1000	1280	1280	1280	1280	1600	1600	1600	1600	2000	2000	2000	2000

					Upstream device															
Series					OptiMat D630-TM320				OptiMat D630-TM400				OptiMat D630-TM500				OptiMat D630-TM630			
OptiMat D250-TM025	In, A				320	320	320	320	400	400	400	400	500	500	500	500	630	630	630	630
		Setpoint			0,7	0,8	0,9	1	0,7	0,8	0,9	1	0,7	0,8	0,9	1	0,7	0,8	0,9	1
			Ir, A		224	256	288	320	280	320	360	400	350	400	450	500	441	504	567	630
				Isd, A	3200	3200	3200	3200	4000	4000	4000	4000	5000	5000	5000	5000	6300	6300	6300	6300
	25	0,7	17,5	250	2560	2560	2560	2560	3200	3200	3200	3200	4000	4000	4000	4000	5040	5040	5040	5040
	25	0,8	20	250	2560	2560	2560	2560	3200	3200	3200	3200	4000	4000	4000	4000	5040	5040	5040	5040
	25	0,9	22,5	250	2560	2560	2560	2560	3200	3200	3200	3200	4000	4000	4000	4000	5040	5040	5040	5040
	25	1	25	250	2560	2560	2560	2560	3200	3200	3200	3200	4000	4000	4000	4000	5040	5040	5040	5040

					Upstream device															
Series					OptiMat D250-TM016				OptiMat D250-TM020				OptiMat D250-TM025				OptiMat D250-TM032			
OptiMat D250-TM032	In, A				16	16	16	16	20	20	20	20	25	25	25	25	32	32	32	32
		Setpoint			0,7	0,8	0,9	1	0,7	0,8	0,9	1	0,7	0,8	0,9	1	0,7	0,8	0,9	1
			Ir, A		11,2	12,8	14,4	16	14	16	18	20	17,5	20	22,5	25	22,4	25,6	28,8	32
				Isd, A	160	160	160	160	200	200	200	200	250	250	250	250	320	320	320	320
	32	0,7	22,4	320																
	32	0,8	25,6	320																
	32	0,9	28,8	320																
	32	1	32	320																

					Upstream device															
Series					OptiMat D250-TM040															
OptiMat D250-TM032	In, A				40	40	40	40												
		Setpoint			0,7	0,8	0,9	1												
			Ir, A		28	32	36	40												
				Isd, A	400	400	400	400												
	32	0,7	22,4	320																
	32	0,8	25,6	320																
	32	0,9	28,8	320																
	32	1	32	320																

					Upstream device															
Series					OptiMat D250-TM050				OptiMat D250-TM063				OptiMat D250-TM080				OptiMat D250-TM100			
OptiMat D250-TM032	In, A				50	50	50	50	63	63	63	63	80	80	80	80	100	100	100	100
		Setpoint			0,7	0,8	0,9	1	0,7	0,8	0,9	1	0,7	0,8	0,9	1	0,7	0,8	0,9	1
			Ir, A		35	40	45	50	44,1	50,4	56,7	63	56	64	72	80	70	80	90	100
				Isd, A	500	500	500	500	630	630	630	630	800	800	800	800	1000	1000	1000	1000
	32	0,7	22,4	320									640	640	640	640	800	800	800	800
	32	0,8	25,6	320									640	640	640	640	800	800	800	800
	32	0,9	28,8	320									640	640	640	640	800	800	800	800
	32	1	32	320									640	640	640	640	800	800	800	800

					Upstream device															
Series					OptiMat D250-TM125				OptiMat D250-TM160				OptiMat D250-TM200				OptiMat D250-TM250			
OptiMat D250-TM032	In, A				125	125	125	125	160	160	160	160	200	200	200	200	250	250	250	250
		Setpoint			0,7	0,8	0,9	1	0,7	0,8	0,9	1	0,7	0,8	0,9	1	0,7	0,8	0,9	1
			Ir, A		87,5	100	112,5	125	112	128	144	160	140	160	180	200	175	200	225	250
				Isd, A	1250	1250	1250	1250	1600	1600	1600	1600	2000	2000	2000	2000	2500	2500	2500	2500
	32	0,7	22,4	320	1000	1000	1000	1000	1280	1280	1280	1280	1600	1600	1600	1600	2000	2000	2000	2000
	32	0,8	25,6	320	1000	1000	1000	1000	1280	1280	1280	1280	1600	1600	1600	1600	2000	2000	2000	2000
	32	0,9	28,8	320	1000	1000	1000	1000	1280	1280	1280	1280	1600	1600	1600	1600	2000	2000	2000	2000
	32	1	32	320	1000	1000	1000	1000	1280	1280	1280	1280	1600	1600	1600	1600	2000	2000	2000	2000

					Upstream device															
Series					OptiMat D630-TM320				OptiMat D630-TM400				OptiMat D630-TM500				OptiMat D630-TM630			
OptiMat D250-TM032	In, A				320	320	320	320	400	400	400	400	500	500	500	500	630	630	630	630
		Setpoint			0,7	0,8	0,9	1	0,7	0,8	0,9	1	0,7	0,8	0,9	1	0,7	0,8	0,9	1
			Ir, A		224	256	288	320	280	320	360	400	350	400	450	500	441	504	567	630
				Isd, A	3200	3200	3200	3200	4000	4000	4000	4000	5000	5000	5000	5000	6300	6300	6300	6300
	32	0,7	22,4	320	2560	2560	2560	2560	3200	3200	3200	3200	4000	4000	4000	4000	5040	5040	5040	5040
	32	0,8	25,6	320	2560	2560	2560	2560	3200	3200	3200	3200	4000	4000	4000	4000	5040	5040	5040	5040
	32	0,9	28,8	320	2560	2560	2560	2560	3200	3200	3200	3200	4000	4000	4000	4000	5040	5040	5040	5040
	32	1	32	320	2560	2560	2560	2560	3200	3200	3200	3200	4000	4000	4000	4000	5040	5040	5040	5040

					Upstream device																			
Series					OptiMat D250-TM016				OptiMat D250-TM020				OptiMat D250-TM025				OptiMat D250-TM032				OptiMat D250-TM040			
OptiMat D250-TM040	In, A				16	16	16	16	20	20	20	20	25	25	25	25	32	32	32	32	40	40	40	40
		Setpoint			0,7	0,8	0,9	1	0,7	0,8	0,9	1	0,7	0,8	0,9	1	0,7	0,8	0,9	1	0,7	0,8	0,9	1
			Ir, A		11,2	12,8	14,4	16	14	16	18	20	17,5	20	22,5	25	22,4	25,6	28,8	32	28	32	36	40
				Isd, A	160	160	160	160	200	200	200	200	250	250	250	250	320	320	320	320	400	400	400	400
	40	0,7	28	400																				
	40	0,8	32	400																				
	40	0,9	36	400																				
	40	1	40	400																				

					Upstream device															
Series					OptiMat D250-TM050				OptiMat D250-TM063				OptiMat D250-TM080				OptiMat D250-TM100			
OptiMat D250-TM040	In, A				50	50	50	50	63	63	63	63	80	80	80	80	100	100	100	100
		Setpoint			0,7	0,8	0,9	1	0,7	0,8	0,9	1	0,7	0,8	0,9	1	0,7	0,8	0,9	1
			Ir, A		35	40	45	50	44,1	50,4	56,7	63	56	64	72	80	70	80	90	100
				Isd, A	500	500	500	500	630	630	630	630	800	800	800	800	1000	1000	1000	1000
	40	0,7	28	400									640	640	640	640	800	800	800	800
	40	0,8	32	400									640	640	640	640	800	800	800	800
	40	0,9	36	400										640	640	640	800	800	800	800
	40	1	40	400										640	640	640	800	800	800	800

					Upstream device															
Series					OptiMat D250-TM125				OptiMat D250-TM160				OptiMat D250-TM200				OptiMat D250-TM250			
OptiMat D250-TM040	In, A				125	125	125	125	160	160	160	160	200	200	200	200	250	250	250	250
		Setpoint			0,7	0,8	0,9	1	0,7	0,8	0,9	1	0,7	0,8	0,9	1	0,7	0,8	0,9	1
			Ir, A		87,5	100	112,5	125	112	128	144	160	140	160	180	200	175	200	225	250
				Isd, A	1250	1250	1250	1250	1600	1600	1600	1600	2000	2000	2000	2000	2500	2500	2500	2500
	40	0,7	28	400	1000	1000	1000	1000	1280	1280	1280	1280	1600	1600	1600	1600	2000	2000	2000	2000
	40	0,8	32	400	1000	1000	1000	1000	1280	1280	1280	1280	1600	1600	1600	1600	2000	2000	2000	2000
	40	0,9	36	400	1000	1000	1000	1000	1280	1280	1280	1280	1600	1600	1600	1600	2000	2000	2000	2000
	40	1	40	400	1000	1000	1000	1000	1280	1280	1280	1280	1600	1600	1600	1600	2000	2000	2000	2000

					Upstream device															
Series					OptiMat D630-TM320				OptiMat D630-TM400				OptiMat D630-TM500				OptiMat D630-TM630			
OptiMat D250-TM040	In, A				320	320	320	320	400	400	400	400	500	500	500	500	630	630	630	630
		Setpoint			0,7	0,8	0,9	1	0,7	0,8	0,9	1	0,7	0,8	0,9	1	0,7	0,8	0,9	1
			Ir, A		224	256	288	320	280	320	360	400	350	400	450	500	441	504	567	630
				Isd, A	3200	3200	3200	3200	4000	4000	4000	4000	5000	5000	5000	5000	6300	6300	6300	6300
	40	0,7	28	400	2560	2560	2560	2560	3200	3200	3200	3200	4000	4000	4000	4000	5040	5040	5040	5040
	40	0,8	32	400	2560	2560	2560	2560	3200	3200	3200	3200	4000	4000	4000	4000	5040	5040	5040	5040
	40	0,9	36	400	2560	2560	2560	2560	3200	3200	3200	3200	4000	4000	4000	4000	5040	5040	5040	5040
	40	1	40	400	2560	2560	2560	2560	3200	3200	3200	3200	4000	4000	4000	4000	5040	5040	5040	5040

					Upstream device																			
Series					OptiMat D250-TM016				OptiMat D250-TM020				OptiMat D250-TM025				OptiMat D250-TM032				OptiMat D250-TM040			
OptiMat D250-TM050	In, A				16	16	16	16	20	20	20	20	25	25	25	25	32	32	32	32	40	40	40	40
		Setpoint			0,7	0,8	0,9	1	0,7	0,8	0,9	1	0,7	0,8	0,9	1	0,7	0,8	0,9	1	0,7	0,8	0,9	1
			Ir, A		11,2	12,8	14,4	16	14	16	18	20	17,5	20	22,5	25	22,4	25,6	28,8	32	28	32	36	40
				Isd, A	160	160	160	160	200	200	200	200	250	250	250	250	320	320	320	320	400	400	400	400
	50	0,7	35	500																				
	50	0,8	40	500																				
	50	0,9	45	500																				
	50	1	50	500																				

					Upstream device															
Series					OptiMat D250-TM050				OptiMat D250-TM063				OptiMat D250-TM080				OptiMat D250-TM100			
OptiMat D250-TM050	In, A				50	50	50	50	63	63	63	63	80	80	80	80	100	100	100	100
		Setpoint			0,7	0,8	0,9	1	0,7	0,8	0,9	1	0,7	0,8	0,9	1	0,7	0,8	0,9	1
			Ir, A		35	40	45	50	44,1	50,4	56,7	63	56	64	72	80	70	80	90	100
				Isd, A	500	500	500	500	630	630	630	630	800	800	800	800	1000	1000	1000	1000
	50	0,7	35	500													800	800	800	800
	50	0,8	40	500													800	800	800	800
	50	0,9	45	500														800	800	800
	50	1	50	500														800	800	800

					Upstream device															
Series					OptiMat D250-TM125				OptiMat D250-TM160				OptiMat D250-TM200				OptiMat D250-TM250			
OptiMat D250-TM050	In, A				125	125	125	125	160	160	160	160	200	200	200	200	250	250	250	250
		Setpoint			0,7	0,8	0,9	1	0,7	0,8	0,9	1	0,7	0,8	0,9	1	0,7	0,8	0,9	1
			Ir, A		87,5	100	112,5	125	112	128	144	160	140	160	180	200	175	200	225	250
				Isd, A	1250	1250	1250	1250	1600	1600	1600	1600	2000	2000	2000	2000	2500	2500	2500	2500
	50	0,7	35	500	1000	1000	1000	1000	1280	1280	1280	1280	1600	1600	1600	1600	2000	2000	2000	2000
	50	0,8	40	500	1000	1000	1000	1000	1280	1280	1280	1280	1600	1600	1600	1600	2000	2000	2000	2000
	50	0,9	45	500	1000	1000	1000	1000	1280	1280	1280	1280	1600	1600	1600	1600	2000	2000	2000	2000
	50	1	50	500	1000	1000	1000	1000	1280	1280	1280	1280	1600	1600	1600	1600	2000	2000	2000	2000

					Upstream device															
Series					OptiMat D630-TM320				OptiMat D630-TM400				OptiMat D630-TM500				OptiMat D630-TM630			
OptiMat D250-TM050	In, A				320	320	320	320	400	400	400	400	500	500	500	500	630	630	630	630
		Setpoint			0,7	0,8	0,9	1	0,7	0,8	0,9	1	0,7	0,8	0,9	1	0,7	0,8	0,9	1
			Ir, A		224	256	288	320	280	320	360	400	350	400	450	500	441	504	567	630
				Isd, A	3200	3200	3200	3200	4000	4000	4000	4000	5000	5000	5000	5000	6300	6300	6300	6300
	50	0,7	35	500	2560	2560	2560	2560	3200	3200	3200	3200	4000	4000	4000	4000	5040	5040	5040	5040
	50	0,8	40	500	2560	2560	2560	2560	3200	3200	3200	3200	4000	4000	4000	4000	5040	5040	5040	5040
	50	0,9	45	500	2560	2560	2560	2560	3200	3200	3200	3200	4000	4000	4000	4000	5040	5040	5040	5040
	50	1	50	500	2560	2560	2560	2560	3200	3200	3200	3200	4000	4000	4000	4000	5040	5040	5040	5040

					Upstream device															
Series					OptiMat D250-TM016				OptiMat D250-TM020				OptiMat D250-TM025				OptiMat D250-TM032				OptiMat D250-TM040			
OptiMat D250-TM063	In, A				16	16	16	16	20	20	20	20	25	25	25	25	32	32	32	32	40	40	40	40
		Setpoint			0,7	0,8	0,9	1	0,7	0,8	0,9	1	0,7	0,8	0,9	1	0,7	0,8	0,9	1	0,7	0,8	0,9	1
			Ir, A		11,2	12,8	14,4	16	14	16	18	20	17,5	20	22,5	25	22,4	25,6	28,8	32	28	32	36	40
				Isd, A	160	160	160	160	200	200	200	200	250	250	250	250	320	320	320	320	400	400	400	400
	63	0,7	44,1	630																				
	63	0,8	50,4	630																				
	63	0,9	56,7	630																				
	63	1	63	630																				

					Upstream device															
Series					OptiMat D250-TM050				OptiMat D250-TM063				OptiMat D250-TM080				OptiMat D250-TM100			
OptiMat D250-TM063	In, A				50	50	50	50	63	63	63	63	80	80	80	80	100	100	100	100
		Setpoint			0,7	0,8	0,9	1	0,7	0,8	0,9	1	0,7	0,8	0,9	1	0,7	0,8	0,9	1
			Ir, A		35	40	45	50	44,1	50,4	56,7	63	56	64	72	80	70	80	90	100
				Isd, A	500	500	500	500	630	630	630	630	800	800	800	800	1000	1000	1000	1000
	63	0,7	44,1	630																
	63	0,8	50,4	630																
	63	0,9	56,7	630																
	63	1	63	630																

					Upstream device															
Series					OptiMat D250-TM125				OptiMat D250-TM160				OptiMat D250-TM200				OptiMat D250-TM250			
OptiMat D250-TM063	In, A				125	125	125	125	160	160	160	160	200	200	200	200	250	250	250	250
		Setpoint			0,7	0,8	0,9	1	0,7	0,8	0,9	1	0,7	0,8	0,9	1	0,7	0,8	0,9	1
			Ir, A		87,5	100	112,5	125	112	128	144	160	140	160	180	200	175	200	225	250
				Isd, A	1250	1250	1250	1250	1600	1600	1600	1600	2000	2000	2000	2000	2500	2500	2500	2500
	63	0,7	44,1	630					1280	1280	1280	1280	1600	1600	1600	1600	2000	2000	2000	2000
	63	0,8	50,4	630					1280	1280	1280	1280	1600	1600	1600	1600	2000	2000	2000	2000
	63	0,9	56,7	630					1280	1280	1280	1280	1600	1600	1600	1600	2000	2000	2000	2000
	63	1	63	630					1280	1280	1280	1280	1600	1600	1600	1600	2000	2000	2000	2000

					Upstream device															
Series					OptiMat D630-TM320				OptiMat D630-TM400				OptiMat D630-TM500				OptiMat D630-TM630			
OptiMat D250-TM063	In, A				320	320	320	320	400	400	400	400	500	500	500	500	630	630	630	630
		Setpoint			0,7	0,8	0,9	1	0,7	0,8	0,9	1	0,7	0,8	0,9	1	0,7	0,8	0,9	1
			Ir, A		224	256	288	320	280	320	360	400	350	400	450	500	441	504	567	630
				Isd, A	3200	3200	3200	3200	4000	4000	4000	4000	5000	5000	5000	5000	6300	6300	6300	6300
	63	0,7	44,1	630	2560	2560	2560	2560	3200	3200	3200	3200	4000	4000	4000	4000	5040	5040	5040	5040
	63	0,8	50,4	630	2560	2560	2560	2560	3200	3200	3200	3200	4000	4000	4000	4000	5040	5040	5040	5040
	63	0,9	56,7	630	2560	2560	2560	2560	3200	3200	3200	3200	4000	4000	4000	4000	5040	5040	5040	5040
	63	1	63	630	2560	2560	2560	2560	3200	3200	3200	3200	4000	4000	4000	4000	5040	5040	5040	5040

					Upstream device															
Series					OptiMat D250-TM016				OptiMat D250-TM020				OptiMat D250-TM025				OptiMat D250-TM032				OptiMat D250-TM040			
OptiMat D250-TM080	In, A				16	16	16	16	20	20	20	20	25	25	25	25	32	32	32	32	40	40	40	40
		Setpoint			0,7	0,8	0,9	1	0,7	0,8	0,9	1	0,7	0,8	0,9	1	0,7	0,8	0,9	1	0,7	0,8	0,9	1
			Ir, A		11,2	12,8	14,4	16	14	16	18	20	17,5	20	22,5	25	22,4	25,6	28,8	32	28	32	36	40
				Isd, A	160	160	160	160	200	200	200	200	250	250	250	250	320	320	320	320	400	400	400	400
	80	0,7	56	800																				
	80	0,8	64	800																				
	80	0,9	72	800																				
	80	1	80	800																				

					Upstream device															
Series					OptiMat D250-TM050				OptiMat D250-TM063				OptiMat D250-TM080				OptiMat D250-TM100			
OptiMat D250-TM080	In, A				50	50	50	50	63	63	63	63	80	80	80	80	100	100	100	100
		Setpoint			0,7	0,8	0,9	1	0,7	0,8	0,9	1	0,7	0,8	0,9	1	0,7	0,8	0,9	1
			Ir, A		35	40	45	50	44,1	50,4	56,7	63	56	64	72	80	70	80	90	100
				Isd, A	500	500	500	500	630	630	630	630	800	800	800	800	1000	1000	1000	1000
	80	0,7	56	800																
	80	0,8	64	800																
	80	0,9	72	800																
	80	1	80	800																

					Upstream device															
Series					OptiMat D250-TM125				OptiMat D250-TM160				OptiMat D250-TM200				OptiMat D250-TM250			
OptiMat D250-TM080	In, A				125	125	125	125	160	160	160	160	200	200	200	200	250	250	250	250
		Setpoint			0,7	0,8	0,9	1	0,7	0,8	0,9	1	0,7	0,8	0,9	1	0,7	0,8	0,9	1
			Ir, A		87,5	100	112,5	125	112	128	144	160	140	160	180	200	175	200	225	250
				Isd, A	1250	1250	1250	1250	1600	1600	1600	1600	2000	2000	2000	2000	2500	2500	2500	2500
	80	0,7	56	800					1280	1280	1280	1280	1600	1600	1600	1600	2000	2000	2000	2000
	80	0,8	64	800					1280	1280	1280	1280	1600	1600	1600	1600	2000	2000	2000	2000
	80	0,9	72	800						1280	1280	1280	1600	1600	1600	1600	2000	2000	2000	2000
	80	1	80	800						1280	1280	1280	1600	1600	1600	1600	2000	2000	2000	2000

					Upstream device															
Series					OptiMat D630-TM320				OptiMat D630-TM400				OptiMat D630-TM500				OptiMat D630-TM630			
OptiMat D250-TM080	In, A				320	320	320	320	400	400	400	400	500	500	500	500	630	630	630	630
		Setpoint			0,7	0,8	0,9	1	0,7	0,8	0,9	1	0,7	0,8	0,9	1	0,7	0,8	0,9	1
			Ir, A		224	256	288	320	280	320	360	400	350	400	450	500	441	504	567	630
				Isd, A	3200	3200	3200	3200	4000	4000	4000	4000	5000	5000	5000	5000	6300	6300	6300	6300
	80	0,7	56	800	2560	2560	2560	2560	3200	3200	3200	3200	4000	4000	4000	4000	5040	5040	5040	5040
	80	0,8	64	800	2560	2560	2560	2560	3200	3200	3200	3200	4000	4000	4000	4000	5040	5040	5040	5040
	80	0,9	72	800	2560	2560	2560	2560	3200	3200	3200	3200	4000	4000	4000	4000	5040	5040	5040	5040
	80	1	80	800	2560	2560	2560	2560	3200	3200	3200	3200	4000	4000	4000	4000	5040	5040	5040	5040

					Upstream device															
Series					OptiMat D250-TM016				OptiMat D250-TM020				OptiMat D250-TM025				OptiMat D250-TM032				OptiMat D250-TM040			
OptiMat D250-TM100	In, A				16	16	16	16	20	20	20	20	25	25	25	25	32	32	32	32	40	40	40	40
		Setpoint			0,7	0,8	0,9	1	0,7	0,8	0,9	1	0,7	0,8	0,9	1	0,7	0,8	0,9	1	0,7	0,8	0,9	1
			Ir, A		11,2	12,8	14,4	16	14	16	18	20	17,5	20	22,5	25	22,4	25,6	28,8	32	28	32	36	40
				Isd, A	160	160	160	160	200	200	200	200	250	250	250	250	320	320	320	320	400	400	400	400
	100	0,7	70	1000																				
	100	0,8	80	1000																				
	100	0,9	90	1000																				
	100	1	100	1000																				

					Upstream device															
Series					OptiMat D250-TM050				OptiMat D250-TM063				OptiMat D250-TM080				OptiMat D250-TM100			
OptiMat D250-TM100	In, A				50	50	50	50	63	63	63	63	80	80	80	80	100	100	100	100
		Setpoint			0,7	0,8	0,9	1	0,7	0,8	0,9	1	0,7	0,8	0,9	1	0,7	0,8	0,9	1
			Ir, A		35	40	45	50	44,1	50,4	56,7	63	56	64	72	80	70	80	90	100
				Isd, A	500	500	500	500	630	630	630	630	800	800	800	800	1000	1000	1000	1000
	100	0,7	70	1000																
	100	0,8	80	1000																
	100	0,9	90	1000																
	100	1	100	1000																

					Upstream device															
Series					OptiMat D250-TM125				OptiMat D250-TM160				OptiMat D250-TM200				OptiMat D250-TM250			
OptiMat D250-TM100	In, A				125	125	125	125	160	160	160	160	200	200	200	200	250	250	250	250
		Setpoint			0,7	0,8	0,9	1	0,7	0,8	0,9	1	0,7	0,8	0,9	1	0,7	0,8	0,9	1
			Ir, A		87,5	100	112,5	125	112	128	144	160	140	160	180	200	175	200	225	250
				Isd, A	1250	1250	1250	1250	1600	1600	1600	1600	2000	2000	2000	2000	2500	2500	2500	2500
	100	0,7	70	1000									1600	1600	1600	1600	2000	2000	2000	2000
	100	0,8	80	1000									1600	1600	1600	1600	2000	2000	2000	2000
	100	0,9	90	1000										1600	1600	1600	2000	2000	2000	2000
	100	1	100	1000										1600	1600	1600	2000	2000	2000	2000

					Upstream device															
Series					OptiMat D630-TM320				OptiMat D630-TM400				OptiMat D630-TM500				OptiMat D630-TM630			
OptiMat D250-TM100	In, A				320	320	320	320	400	400	400	400	500	500	500	500	630	630	630	630
		Setpoint			0,7	0,8	0,9	1	0,7	0,8	0,9	1	0,7	0,8	0,9	1	0,7	0,8	0,9	1
			Ir, A		224	256	288	320	280	320	360	400	350	400	450	500	441	504	567	630
				Isd, A	3200	3200	3200	3200	4000	4000	4000	4000	5000	5000	5000	5000	6300	6300	6300	6300
	100	0,7	70	1000	2560	2560	2560	2560	3200	3200	3200	3200	4000	4000	4000	4000	5040	5040	5040	5040
	100	0,8	80	1000	2560	2560	2560	2560	3200	3200	3200	3200	4000	4000	4000	4000	5040	5040	5040	5040
	100	0,9	90	1000	2560	2560	2560	2560	3200	3200	3200	3200	4000	4000	4000	4000	5040	5040	5040	5040
	100	1	100	1000	2560	2560	2560	2560	3200	3200	3200	3200	4000	4000	4000	4000	5040	5040	5040	5040

					Upstream device																			
Series					OptiMat D250-TM016				OptiMat D250-TM020				OptiMat D250-TM025				OptiMat D250-TM032				OptiMat D250-TM040			
OptiMat D250-TM125	In, A				16	16	16	16	20	20	20	20	25	25	25	25	32	32	32	32	40	40	40	40
		Setpoint			0,7	0,8	0,9	1	0,7	0,8	0,9	1	0,7	0,8	0,9	1	0,7	0,8	0,9	1	0,7	0,8	0,9	1
			Ir, A		11,2	12,8	14,4	16	14	16	18	20	17,5	20	22,5	25	22,4	25,6	28,8	32	28	32	36	40
				Isd, A	160	160	160	160	200	200	200	200	250	250	250	250	320	320	320	320	400	400	400	400
	125	0,7	87,5	1250																				
	125	0,8	100	1250																				
	125	0,9	112,5	1250																				
	125	1	125	1250																				

					Upstream device															
Series					OptiMat D250-TM050				OptiMat D250-TM063				OptiMat D250-TM080				OptiMat D250-TM100			
OptiMat D250-TM125	In, A				50	50	50	50	63	63	63	63	80	80	80	80	100	100	100	100
		Setpoint			0,7	0,8	0,9	1	0,7	0,8	0,9	1	0,7	0,8	0,9	1	0,7	0,8	0,9	1
			Ir, A		35	40	45	50	44,1	50,4	56,7	63	56	64	72	80	70	80	90	100
				Isd, A	500	500	500	500	630	630	630	630	800	800	800	800	1000	1000	1000	1000
	125	0,7	87,5	1250																
	125	0,8	100	1250																
	125	0,9	112,5	1250																
	125	1	125	1250																

					Upstream device															
Series					OptiMat D250-TM125				OptiMat D250-TM160				OptiMat D250-TM200				OptiMat D250-TM250			
OptiMat D250-TM125	In, A				125	125	125	125	160	160	160	160	200	200	200	200	250	250	250	250
		Setpoint			0,7	0,8	0,9	1	0,7	0,8	0,9	1	0,7	0,8	0,9	1	0,7	0,8	0,9	1
			Ir, A		87,5	100	112,5	125	112	128	144	160	140	160	180	200	175	200	225	250
				Isd, A	1250	1250	1250	1250	1600	1600	1600	1600	2000	2000	2000	2000	2500	2500	2500	2500
	125	0,7	87,5	1250													2000	2000	2000	2000
	125	0,8	100	1250													2000	2000	2000	2000
	125	0,9	112,5	1250														2000	2000	2000
	125	1	125	1250														2000	2000	2000

					Upstream device															
Series					OptiMat D630-TM320				OptiMat D630-TM400				OptiMat D630-TM500				OptiMat D630-TM630			
OptiMat D250-TM125	In, A				320	320	320	320	400	400	400	400	500	500	500	500	630	630	630	630
		Setpoint			0,7	0,8	0,9	1	0,7	0,8	0,9	1	0,7	0,8	0,9	1	0,7	0,8	0,9	1
			Ir, A		224	256	288	320	280	320	360	400	350	400	450	500	441	504	567	630
				Isd, A	3200	3200	3200	3200	4000	4000	4000	4000	5000	5000	5000	5000	6300	6300	6300	6300
	125	0,7	87,5	1250	2560	2560	2560	2560	3200	3200	3200	3200	4000	4000	4000	4000	5040	5040	5040	5040
	125	0,8	100	1250	2560	2560	2560	2560	3200	3200	3200	3200	4000	4000	4000	4000	5040	5040	5040	5040
	125	0,9	112,5	1250	2560	2560	2560	2560	3200	3200	3200	3200	4000	4000	4000	4000	5040	5040	5040	5040
	125	1	125	1250	2560	2560	2560	2560	3200	3200	3200	3200	4000	4000	4000	4000	5040	5040	5040	5040

					Upstream device																			
Series					OptiMat D250-TM016				OptiMat D250-TM020				OptiMat D250-TM025				OptiMat D250-TM032				OptiMat D250-TM040			
OptiMat D250-TM160	In, A				16	16	16	16	20	20	20	20	25	25	25	25	32	32	32	32	40	40	40	40
		Setpoint			0,7	0,8	0,9	1	0,7	0,8	0,9	1	0,7	0,8	0,9	1	0,7	0,8	0,9	1	0,7	0,8	0,9	1
			Ir, A		11,2	12,8	14,4	16	14	16	18	20	17,5	20	22,5	25	22,4	25,6	28,8	32	28	32	36	40
				Isd, A	160	160	160	160	200	200	200	200	250	250	250	250	320	320	320	320	400	400	400	400
	160	0,7	112	1600																				
	160	0,8	128	1600																				
	160	0,9	144	1600																				
	160	1	160	1600																				

					Upstream device															
Series					OptiMat D250-TM050				OptiMat D250-TM063				OptiMat D250-TM080				OptiMat D250-TM100			
OptiMat D250-TM160	In, A				50	50	50	50	63	63	63	63	80	80	80	80	100	100	100	100
		Setpoint			0,7	0,8	0,9	1	0,7	0,8	0,9	1	0,7	0,8	0,9	1	0,7	0,8	0,9	1
			Ir, A		35	40	45	50	44,1	50,4	56,7	63	56	64	72	80	70	80	90	100
				Isd, A	500	500	500	500	630	630	630	630	800	800	800	800	1000	1000	1000	1000
	160	0,7	112	1600																
	160	0,8	128	1600																
	160	0,9	144	1600																
	160	1	160	1600																

					Upstream device															
Series					OptiMat D250-TM125				OptiMat D250-TM160				OptiMat D250-TM200				OptiMat D250-TM250			
OptiMat D250-TM160	In, A				125	125	125	125	160	160	160	160	200	200	200	200	250	250	250	250
		Setpoint			0,7	0,8	0,9	1	0,7	0,8	0,9	1	0,7	0,8	0,9	1	0,7	0,8	0,9	1
			Ir, A		87,5	100	112,5	125	112	128	144	160	140	160	180	200	175	200	225	250
				Isd, A	1250	1250	1250	1250	1600	1600	1600	1600	2000	2000	2000	2000	2500	2500	2500	2500
	160	0,7	112	1600																
	160	0,8	128	1600																
	160	0,9	144	1600																
	160	1	160	1600																

					Upstream device															
Series					OptiMat D630-TM320				OptiMat D630-TM400				OptiMat D630-TM500				OptiMat D630-TM630			
OptiMat D250-TM160	In, A				320	320	320	320	400	400	400	400	500	500	500	500	630	630	630	630
		Setpoint			0,7	0,8	0,9	1	0,7	0,8	0,9	1	0,7	0,8	0,9	1	0,7	0,8	0,9	1
			Ir, A		224	256	288	320	280	320	360	400	350	400	450	500	441	504	567	630
				Isd, A	3200	3200	3200	3200	4000	4000	4000	4000	5000	5000	5000	5000	6300	6300	6300	6300
	160	0,7	112	1600	2560	2560	2560	2560	3200	3200	3200	3200	4000	4000	4000	4000	5040	5040	5040	5040
	160	0,8	128	1600	2560	2560	2560	2560	3200	3200	3200	3200	4000	4000	4000	4000	5040	5040	5040	5040
	160	0,9	144	1600		2560	2560	2560	3200	3200	3200	3200	4000	4000	4000	4000	5040	5040	5040	5040
	160	1	160	1600		2560	2560	2560	3200	3200	3200	3200	4000	4000	4000	4000	5040	5040	5040	5040

					Upstream device															
Series					OptiMat D250-TM016				OptiMat D250-TM020				OptiMat D250-TM025				OptiMat D250-TM032				OptiMat D250-TM040			
OptiMat D250-TM200	In, A				16	16	16	16	20	20	20	20	25	25	25	25	32	32	32	32	40	40	40	40
		Setpoint			0,7	0,8	0,9	1	0,7	0,8	0,9	1	0,7	0,8	0,9	1	0,7	0,8	0,9	1	0,7	0,8	0,9	1
			Ir, A		11,2	12,8	14,4	16	14	16	18	20	17,5	20	22,5	25	22,4	25,6	28,8	32	28	32	36	40
				Isd, A	160	160	160	160	200	200	200	200	250	250	250	250	320	320	320	320	400	400	400	400
	200	0,7	140	2000																				
	200	0,8	160	2000																				
	200	0,9	180	2000																				
	200	1	200	2000																				

					Upstream device															
Series					OptiMat D250-TM050				OptiMat D250-TM063				OptiMat D250-TM080				OptiMat D250-TM100			
OptiMat D250-TM200	In, A				50	50	50	50	63	63	63	63	80	80	80	80	100	100	100	100
		Setpoint			0,7	0,8	0,9	1	0,7	0,8	0,9	1	0,7	0,8	0,9	1	0,7	0,8	0,9	1
			Ir, A		35	40	45	50	44,1	50,4	56,7	63	56	64	72	80	70	80	90	100
				Isd, A	500	500	500	500	630	630	630	630	800	800	800	800	1000	1000	1000	1000
	200	0,7	140	2000																
	200	0,8	160	2000																
	200	0,9	180	2000																
	200	1	200	2000																

					Upstream device															
Series					OptiMat D250-TM125				OptiMat D250-TM160				OptiMat D250-TM200				OptiMat D250-TM250			
OptiMat D250-TM200	In, A				125	125	125	125	160	160	160	160	200	200	200	200	250	250	250	250
		Setpoint			0,7	0,8	0,9	1	0,7	0,8	0,9	1	0,7	0,8	0,9	1	0,7	0,8	0,9	1
			Ir, A		87,5	100	112,5	125	112	128	144	160	140	160	180	200	175	200	225	250
				Isd, A	1250	1250	1250	1250	1600	1600	1600	1600	2000	2000	2000	2000	2500	2500	2500	2500
	200	0,7	140	2000																
	200	0,8	160	2000																
	200	0,9	180	2000																
	200	1	200	2000																

					Upstream device															
Series					OptiMat D630-TM320				OptiMat D630-TM400				OptiMat D630-TM500				OptiMat D630-TM630			
OptiMat D250-TM200	In, A				320	320	320	320	400	400	400	400	500	500	500	500	630	630	630	630
		Setpoint			0,7	0,8	0,9	1	0,7	0,8	0,9	1	0,7	0,8	0,9	1	0,7	0,8	0,9	1
			Ir, A		224	256	288	320	280	320	360	400	350	400	450	500	441	504	567	630
				Isd, A	3200	3200	3200	3200	4000	4000	4000	4000	5000	5000	5000	5000	6300	6300	6300	6300
	200	0,7	140	2000					3200	3200	3200	3200	4000	4000	4000	4000	5040	5040	5040	5040
	200	0,8	160	2000					3200	3200	3200	3200	4000	4000	4000	4000	5040	5040	5040	5040
	200	0,9	180	2000						3200	3200	3200	4000	4000	4000	4000	5040	5040	5040	5040
	200	1	200	2000						3200	3200	3200	4000	4000	4000	4000	5040	5040	5040	5040

					Upstream device																			
Series					OptiMat D250-TM016				OptiMat D250-TM020				OptiMat D250-TM025				OptiMat D250-TM032				OptiMat D250-TM040			
OptiMat D250-TM250	In, A				16	16	16	16	20	20	20	20	25	25	25	25	32	32	32	32	40	40	40	40
		Setpoint			0,7	0,8	0,9	1	0,7	0,8	0,9	1	0,7	0,8	0,9	1	0,7	0,8	0,9	1	0,7	0,8	0,9	1
			Ir, A		11,2	12,8	14,4	16	14	16	18	20	17,5	20	22,5	25	22,4	25,6	28,8	32	28	32	36	40
				Isd, A	160	160	160	160	200	200	200	200	250	250	250	250	320	320	320	320	400	400	400	400
	250	0,7	175	2500																				
	250	0,8	200	2500																				
	250	0,9	225	2500																				
	250	1	250	2500																				

					Upstream device															
Series					OptiMat D250-TM050				OptiMat D250-TM063				OptiMat D250-TM080				OptiMat D250-TM100			
OptiMat D250-TM250	In, A				50	50	50	50	63	63	63	63	80	80	80	80	100	100	100	100
		Setpoint			0,7	0,8	0,9	1	0,7	0,8	0,9	1	0,7	0,8	0,9	1	0,7	0,8	0,9	1
			Ir, A		35	40	45	50	44,1	50,4	56,7	63	56	64	72	80	70	80	90	100
				Isd, A	500	500	500	500	630	630	630	630	800	800	800	800	1000	1000	1000	1000
	250	0,7	175	2500																
	250	0,8	200	2500																
	250	0,9	225	2500																
	250	1	250	2500																

					Upstream device															
Series					OptiMat D250-TM125				OptiMat D250-TM160				OptiMat D250-TM200				OptiMat D250-TM250			
OptiMat D250-TM250	In, A				125	125	125	125	160	160	160	160	200	200	200	200	250	250	250	250
		Setpoint			0,7	0,8	0,9	1	0,7	0,8	0,9	1	0,7	0,8	0,9	1	0,7	0,8	0,9	1
			Ir, A		87,5	100	112,5	125	112	128	144	160	140	160	180	200	175	200	225	250
				Isd, A	1250	1250	1250	1250	1600	1600	1600	1600	2000	2000	2000	2000	2500	2500	2500	2500
	250	0,7	175	2500																
	250	0,8	200	2500																
	250	0,9	225	2500																
	250	1	250	2500																

					Upstream device															
Series					OptiMat D630-TM320				OptiMat D630-TM400				OptiMat D630-TM500				OptiMat D630-TM630			
OptiMat D250-TM250	In, A				320	320	320	320	400	400	400	400	500	500	500	500	630	630	630	630
		Setpoint			0,7	0,8	0,9	1	0,7	0,8	0,9	1	0,7	0,8	0,9	1	0,7	0,8	0,9	1
			Ir, A		224	256	288	320	280	320	360	400	350	400	450	500	441	504	567	630
				Isd, A	3200	3200	3200	3200	4000	4000	4000	4000	5000	5000	5000	5000	6300	6300	6300	6300
	250	0,7	175	2500									4000	4000	4000	4000	5040	5040	5040	5040
	250	0,8	200	2500									4000	4000	4000	4000	5040	5040	5040	5040
	250	0,9	225	2500										4000	4000	4000	5040	5040	5040	5040
	250	1	250	2500										4000	4000	4000	5040	5040	5040	5040

					Upstream device															
Series					OptiMat D250-TM016				OptiMat D250-TM020				OptiMat D250-TM025				OptiMat D250-TM032				OptiMat D250-TM040			
OptiMat D630-TM320	In, A				16	16	16	16	20	20	20	20	25	25	25	25	32	32	32	32	40	40	40	40
		Setpoint			0,7	0,8	0,9	1	0,7	0,8	0,9	1	0,7	0,8	0,9	1	0,7	0,8	0,9	1	0,7	0,8	0,9	1
			Ir, A		11,2	12,8	14,4	16	14	16	18	20	17,5	20	22,5	25	22,4	25,6	28,8	32	28	32	36	40
				Isd, A	160	160	160	160	200	200	200	200	250	250	250	250	320	320	320	320	400	400	400	400
	320	0,7	175	3200																				
	320	0,8	200	3200																				
	320	0,9	225	3200																				
	320	1	250	3200																				

					Upstream device															
Series					OptiMat D250-TM050				OptiMat D250-TM063				OptiMat D250-TM080				OptiMat D250-TM100			
OptiMat D630-TM320	In, A				50	50	50	50	63	63	63	63	80	80	80	80	100	100	100	100
		Setpoint			0,7	0,8	0,9	1	0,7	0,8	0,9	1	0,7	0,8	0,9	1	0,7	0,8	0,9	1
			Ir, A		35	40	45	50	44,1	50,4	56,7	63	56	64	72	80	70	80	90	100
				Isd, A	500	500	500	500	630	630	630	630	800	800	800	800	1000	1000	1000	1000
	320	0,7	175	3200																
	320	0,8	200	3200																
	320	0,9	225	3200																
	320	1	250	3200																

					Upstream device															
Series					OptiMat D250-TM125				OptiMat D250-TM160				OptiMat D250-TM200				OptiMat D250-TM250			
OptiMat D630-TM320	In, A				125	125	125	125	160	160	160	160	200	200	200	200	250	250	250	250
		Setpoint			0,7	0,8	0,9	1	0,7	0,8	0,9	1	0,7	0,8	0,9	1	0,7	0,8	0,9	1
			Ir, A		87,5	100	112,5	125	112	128	144	160	140	160	180	200	175	200	225	250
				Isd, A	1250	1250	1250	1250	1600	1600	1600	1600	2000	2000	2000	2000	2500	2500	2500	2500
	320	0,7	175	3200																
	320	0,8	200	3200																
	320	0,9	225	3200																
	320	1	250	3200																

					Upstream device															
Series					OptiMat D630-TM320				OptiMat D630-TM400				OptiMat D630-TM500				OptiMat D630-TM630			
OptiMat D630-TM320	In, A				320	320	320	320	400	400	400	400	500	500	500	500	630	630	630	630
		Setpoint			0,7	0,8	0,9	1	0,7	0,8	0,9	1	0,7	0,8	0,9	1	0,7	0,8	0,9	1
			Ir, A		224	256	288	320	280	320	360	400	350	400	450	500	441	504	567	630
				Isd, A	3200	3200	3200	3200	4000	4000	4000	4000	5000	5000	5000	5000	6300	6300	6300	6300
	320	0,7	175	3200																
	320	0,8	200	3200																
	320	0,9	225	3200																
	320	1	250	3200																

					Upstream device															
Series					OptiMat D250-TM016				OptiMat D250-TM020				OptiMat D250-TM025				OptiMat D250-TM032				OptiMat D250-TM040			
OptiMat D630-TM400	In, A				16	16	16	16	20	20	20	20	25	25	25	25	32	32	32	32	40	40	40	40
		Setpoint			0,7	0,8	0,9	1	0,7	0,8	0,9	1	0,7	0,8	0,9	1	0,7	0,8	0,9	1	0,7	0,8	0,9	1
			Ir, A		11,2	12,8	14,4	16	14	16	18	20	17,5	20	22,5	25	22,4	25,6	28,8	32	28	32	36	40
				Isd, A	160	160	160	160	200	200	200	200	250	250	250	250	320	320	320	320	400	400	400	400
	400	0,7	175	4000																				
	400	0,8	200	4000																				
	400	0,9	225	4000																				
	400	1	250	4000																				

					Upstream device															
Series					OptiMat D250-TM050				OptiMat D250-TM063				OptiMat D250-TM080				OptiMat D250-TM100			
OptiMat D630-TM400	In, A				50	50	50	50	63	63	63	63	80	80	80	80	100	100	100	100
		Setpoint			0,7	0,8	0,9	1	0,7	0,8	0,9	1	0,7	0,8	0,9	1	0,7	0,8	0,9	1
			Ir, A		35	40	45	50	44,1	50,4	56,7	63	56	64	72	80	70	80	90	100
				Isd, A	500	500	500	500	630	630	630	630	800	800	800	800	1000	1000	1000	1000
	400	0,7	175	4000																
	400	0,8	200	4000																
	400	0,9	225	4000																
	400	1	250	4000																

					Upstream device															
Series					OptiMat D250-TM125				OptiMat D250-TM160				OptiMat D250-TM200				OptiMat D250-TM250			
OptiMat D630-TM400	In, A				125	125	125	125	160	160	160	160	200	200	200	200	250	250	250	250
		Setpoint			0,7	0,8	0,9	1	0,7	0,8	0,9	1	0,7	0,8	0,9	1	0,7	0,8	0,9	1
			Ir, A		87,5	100	112,5	125	112	128	144	160	140	160	180	200	175	200	225	250
				Isd, A	1250	1250	1250	1250	1600	1600	1600	1600	2000	2000	2000	2000	2500	2500	2500	2500
	400	0,7	175	4000																
	400	0,8	200	4000																
	400	0,9	225	4000																
	400	1	250	4000																

					Upstream device															
Series					OptiMat D630-TM320				OptiMat D630-TM400				OptiMat D630-TM500				OptiMat D630-TM630			
OptiMat D630-TM400	In, A				320	320	320	320	400	400	400	400	500	500	500	500	630	630	630	630
		Setpoint			0,7	0,8	0,9	1	0,7	0,8	0,9	1	0,7	0,8	0,9	1	0,7	0,8	0,9	1
			Ir, A		224	256	288	320	280	320	360	400	350	400	450	500	441	504	567	630
				Isd, A	3200	3200	3200	3200	4000	4000	4000	4000	5000	5000	5000	5000	6300	6300	6300	6300
	400	0,7	175	4000																
	400	0,8	200	4000																
	400	0,9	225	4000																
	400	1	250	4000																

					Upstream device																			
Series					OptiMat D250-TM016				OptiMat D250-TM020				OptiMat D250-TM025				OptiMat D250-TM032				OptiMat D250-TM040			
OptiMat D630-TM500	In, A				16	16	16	16	20	20	20	20	25	25	25	25	32	32	32	32	40	40	40	40
		Setpoint			0,7	0,8	0,9	1	0,7	0,8	0,9	1	0,7	0,8	0,9	1	0,7	0,8	0,9	1	0,7	0,8	0,9	1
			Ir, A		11,2	12,8	14,4	16	14	16	18	20	17,5	20	22,5	25	22,4	25,6	28,8	32	28	32	36	40
				Isd, A	160	160	160	160	200	200	200	200	250	250	250	250	320	320	320	320	400	400	400	400
	500	0,7	175	5000																				
	500	0,8	200	5000																				
	500	0,9	225	5000																				
	500	1	250	5000																				

					Upstream device															
Series					OptiMat D250-TM050				OptiMat D250-TM063				OptiMat D250-TM080				OptiMat D250-TM100			
OptiMat D630-TM500	In, A				50	50	50	50	63	63	63	63	80	80	80	80	100	100	100	100
		Setpoint			0,7	0,8	0,9	1	0,7	0,8	0,9	1	0,7	0,8	0,9	1	0,7	0,8	0,9	1
			Ir, A		35	40	45	50	44,1	50,4	56,7	63	56	64	72	80	70	80	90	100
				Isd, A	500	500	500	500	630	630	630	630	800	800	800	800	1000	1000	1000	1000
	500	0,7	175	5000																
	500	0,8	200	5000																
	500	0,9	225	5000																
	500	1	250	5000																

					Upstream device															
Series					OptiMat D250-TM125				OptiMat D250-TM160				OptiMat D250-TM200				OptiMat D250-TM250			
OptiMat D630-TM500	In, A				125	125	125	125	160	160	160	160	200	200	200	200	250	250	250	250
		Setpoint			0,7	0,8	0,9	1	0,7	0,8	0,9	1	0,7	0,8	0,9	1	0,7	0,8	0,9	1
			Ir, A		87,5	100	112,5	125	112	128	144	160	140	160	180	200	175	200	225	250
				Isd, A	1250	1250	1250	1250	1600	1600	1600	1600	2000	2000	2000	2000	2500	2500	2500	2500
	500	0,7	175	5000																
	500	0,8	200	5000																
	500	0,9	225	5000																
	500	1	250	5000																

					Upstream device															
Series					OptiMat D630-TM320				OptiMat D630-TM400				OptiMat D630-TM500				OptiMat D630-TM630			
OptiMat D630-TM500	In, A				320	320	320	320	400	400	400	400	500	500	500	500	630	630	630	630
		Setpoint			0,7	0,8	0,9	1	0,7	0,8	0,9	1	0,7	0,8	0,9	1	0,7	0,8	0,9	1
			Ir, A		224	256	288	320	280	320	360	400	350	400	450	500	441	504	567	630
				Isd, A	3200	3200	3200	3200	4000	4000	4000	4000	5000	5000	5000	5000	6300	6300	6300	6300
	500	0,7	175	5000																
	500	0,8	200	5000																
	500	0,9	225	5000																
	500	1	250	5000																

					Upstream device															
Series					OptiMat D250-TM016				OptiMat D250-TM020				OptiMat D250-TM025				OptiMat D250-TM032				OptiMat D250-TM040			
OptiMat D630-TM630	In, A				16	16	16	16	20	20	20	20	25	25	25	25	32	32	32	32	40	40	40	40
		Setpoint			0,7	0,8	0,9	1	0,7	0,8	0,9	1	0,7	0,8	0,9	1	0,7	0,8	0,9	1	0,7	0,8	0,9	1
			Ir, A		11,2	12,8	14,4	16	14	16	18	20	17,5	20	22,5	25	22,4	25,6	28,8	32	28	32	36	40
				Isd, A	160	160	160	160	200	200	200	200	250	250	250	250	320	320	320	320	400	400	400	400
	630	0,7	175	6300																				
	630	0,8	200	6300																				
	630	0,9	225	6300																				
	630	1	250	6300																				

					Upstream device															
Series					OptiMat D250-TM050				OptiMat D250-TM063				OptiMat D250-TM080				OptiMat D250-TM100			
OptiMat D630-TM630	In, A				50	50	50	50	63	63	63	63	80	80	80	80	100	100	100	100
		Setpoint			0,7	0,8	0,9	1	0,7	0,8	0,9	1	0,7	0,8	0,9	1	0,7	0,8	0,9	1
			Ir, A		35	40	45	50	44,1	50,4	56,7	63	56	64	72	80	70	80	90	100
				Isd, A	500	500	500	500	630	630	630	630	800	800	800	800	1000	1000	1000	1000
	630	0,7	175	6300																
	630	0,8	200	6300																
	630	0,9	225	6300																
	630	1	250	6300																

					Upstream device															
Series					OptiMat D250-TM125				OptiMat D250-TM160				OptiMat D250-TM200				OptiMat D250-TM250			
OptiMat D630-TM630	In, A				125	125	125	125	160	160	160	160	200	200	200	200	250	250	250	250
		Setpoint			0,7	0,8	0,9	1	0,7	0,8	0,9	1	0,7	0,8	0,9	1	0,7	0,8	0,9	1
			Ir, A		87,5	100	112,5	125	112	128	144	160	140	160	180	200	175	200	225	250
				Isd, A	1250	1250	1250	1250	1600	1600	1600	1600	2000	2000	2000	2000	2500	2500	2500	2500
	630	0,7	175	6300																
	630	0,8	200	6300																
	630	0,9	225	6300																
	630	1	250	6300																

					Upstream device															
Series					OptiMat D630-TM320				OptiMat D630-TM400				OptiMat D630-TM500				OptiMat D630-TM630			
OptiMat D630-TM630	In, A				320	320	320	320	400	400	400	400	500	500	500	500	630	630	630	630
		Setpoint			0,7	0,8	0,9	1	0,7	0,8	0,9	1	0,7	0,8	0,9	1	0,7	0,8	0,9	1
			Ir, A		224	256	288	320	280	320	360	400	350	400	450	500	441	504	567	630
				Isd, A	3200	3200	3200	3200	4000	4000	4000	4000	5000	5000	5000	5000	6300	6300	6300	6300
	630	0,7	175	6300																
	630	0,8	200	6300																
	630	0,9	225	6300																
	630	1	250	6300																

Примечание: 1000 Selectivity current limit Is = 1000 A
Selectivity not ensured

OptiMat D-MR - OptiMat D-TM

		Upstream device												
Series		OptiMat D100 N/H (40/65 kA at Ue = 400 V)												
OptiMat D250-TM016	In, A				40	45	50	56	63	70	80	90	95	100
		Setpoint	Ir, A	Isd, A	400	450	500	560	630	700	800	900	950	1000
	16	0,7	11,2	160	1200	1200	1200	1200	1200	1200	1200	1200	1200	1200
	16	0,8	12,8	160	1200	1200	1200	1200	1200	1200	1200	1200	1200	1200
	16	0,9	14,4	160	1200	1200	1200	1200	1200	1200	1200	1200	1200	1200
	16	1	16	160	1200	1200	1200	1200	1200	1200	1200	1200	1200	1200

		Upstream device												
Series		OptiMat D160 N/H (40/65 kA at Ue = 400 V)												
OptiMat D250-TM016	In, A				64	72	80	89,6	100,8	112	128	144	152	160
		Setpoint	Ir, A	Isd, A	640	720	800	896	1008	1120	1280	1440	1520	1600
	16	0,7	11,2	160	2000	2000	2000	2000	2000	2000	2000	2000	2000	2000
	16	0,8	12,8	160	2000	2000	2000	2000	2000	2000	2000	2000	2000	2000
	16	0,9	14,4	160	2000	2000	2000	2000	2000	2000	2000	2000	2000	2000
	16	1	16	160	2000	2000	2000	2000	2000	2000	2000	2000	2000	2000

		Upstream device												
Series		OptiMat D250 N/H (40/65 kA at Ue = 400 V)												
OptiMat D250-TM016	In, A				100	112,5	125	140	157,5	175	200	225	237,5	250
		Setpoint	Ir, A	Isd, A	1000	1125	1250	1400	1575	1750	2000	2250	2375	2500
	16	0,7	11,2	160	3000	3000	3000	3000	3000	3000	3000	3000	3000	3000
	16	0,8	12,8	160	3000	3000	3000	3000	3000	3000	3000	3000	3000	3000
	16	0,9	14,4	160	3000	3000	3000	3000	3000	3000	3000	3000	3000	3000
	16	1	16	160	3000	3000	3000	3000	3000	3000	3000	3000	3000	3000

		Upstream device														
Series		OptiMat D400 N/H (40/65 kA at Ue = 400 V)														
OptiMat D250-TM016	In, A				160	180	200	220	240	260	280	300	320	340	360	380	400
		Setpoint	Ir, A	Isd, A	1600	1800	2000	2200	2400	2600	2800	3000	3200	3400	3600	3800	4000
	16	0,7	11,2	160	5000	5000	5000	5000	5000	5000	5000	5000	5000	5000	5000	5000	5000
	16	0,8	12,8	160	5000	5000	5000	5000	5000	5000	5000	5000	5000	5000	5000	5000	5000
	16	0,9	14,4	160	5000	5000	5000	5000	5000	5000	5000	5000	5000	5000	5000	5000	5000
	16	1	16	160	5000	5000	5000	5000	5000	5000	5000	5000	5000	5000	5000	5000	5000

		Upstream device																						
Series		OptiMat D630 N/H (40/65 kA at Ue = 400 V)																						
OptiMat D250-TM016	In, A				250	270	290	310	330	350	370	390	410	430	450	470	490	510	530	550	570	590	610	630
		Setpoint	Ir, A	Isd, A	2500	2700	2900	3100	3300	3500	3700	3900	4100	4300	4500	4700	4900	5100	5300	5500	5700	5900	6100	6300
	16	0,7	11,2	160	7000	7000	7000	7000	7000	7000	7000	7000	7000	7000	7000	7000	7000	7000	7000	7000	7000	7000	7000	7000
	16	0,8	12,8	160	7000	7000	7000	7000	7000	7000	7000	7000	7000	7000	7000	7000	7000	7000	7000	7000	7000	7000	7000	7000
	16	0,9	14,4	160	7000	7000	7000	7000	7000	7000	7000	7000	7000	7000	7000	7000	7000	7000	7000	7000	7000	7000	7000	7000
	16	1	16	160	7000	7000	7000	7000	7000	7000	7000	7000	7000	7000	7000	7000	7000	7000	7000	7000	7000	7000	7000	7000

		Upstream device															
Series		OptiMat D800 N/H (50/85 kA at Ue = 400 V)															
OptiMat D250-TM016	In, A				320	360	400	440	480	520	560	600	640	680	720	760	800
		Setpoint	Ir, A	Isd, A	3200	3600	4000	4400	4800	5200	5600	6000	6400	6800	7200	7600	8000
	16	0,7	11,2	160	9600	9600	9600	9600	9600	9600	9600	9600	9600	9600	9600	9600	9600
	16	0,8	12,8	160	9600	9600	9600	9600	9600	9600	9600	9600	9600	9600	9600	9600	9600
	16	0,9	14,4	160	9600	9600	9600	9600	9600	9600	9600	9600	9600	9600	9600	9600	9600
	16	1	16	160	9600	9600	9600	9600	9600	9600	9600	9600	9600	9600	9600	9600	9600

Series		Upstream device			OptiMat D1000 N/H (50/85 kA at Ue = 400 V)												
OptiMat D250-TM016	In, A				400	450	500	550	600	650	700	750	800	850	900	950	1000
		Setpoint	Ir, A	Isd, A	4000	4500	5000	5500	6000	6500	7000	7500	8000	8500	9000	9500	10000
	16	0,7	11,2	160	12000	12000	12000	12000	12000	12000	12000	12000	12000	12000	12000	12000	12000
	16	0,8	12,8	160	12000	12000	12000	12000	12000	12000	12000	12000	12000	12000	12000	12000	12000
	16	0,9	14,4	160	12000	12000	12000	12000	12000	12000	12000	12000	12000	12000	12000	12000	12000
	16	1	16	160	12000	12000	12000	12000	12000	12000	12000	12000	12000	12000	12000	12000	12000

Series		Upstream device			OptiMat D1250 N/H (50/85 kA at Ue = 400 V)															
OptiMat D250-TM016	In, A				500	550	600	650	700	750	800	850	900	950	1000	1050	1100	1150	1200	1250
		Setpoint	Ir, A	Isd, A	5000	5500	6000	6500	7000	7500	8000	8500	9000	9500	10000	10500	11000	11500	12000	12500
	16	0,7	11,2	160	15000	15000	15000	15000	15000	15000	15000	15000	15000	15000	15000	15000	15000	15000	15000	15000
	16	0,8	12,8	160	15000	15000	15000	15000	15000	15000	15000	15000	15000	15000	15000	15000	15000	15000	15000	15000
	16	0,9	14,4	160	15000	15000	15000	15000	15000	15000	15000	15000	15000	15000	15000	15000	15000	15000	15000	15000
	16	1	16	160	15000	15000	15000	15000	15000	15000	15000	15000	15000	15000	15000	15000	15000	15000	15000	15000

Series		Upstream device			OptiMat D1600 N/H (50/85 kA at Ue = 400 V)															
OptiMat D250-TM016	In, A				640	700	760	820	880	940	1000	1060	1120	1180	1240	1300	1360	1420	1480	1540	1600
		Setpoint	Ir, A	Isd, A	6400	7000	7600	8200	8800	9400	10000	10600	11200	11800	12400	13000	13600	14200	14800	15400	16000
	16	0,7	11,2	160	19200	19200	19200	19200	19200	19200	19200	19200	19200	19200	19200	19200	19200	19200	19200	19200	19200
	16	0,8	12,8	160	19200	19200	19200	19200	19200	19200	19200	19200	19200	19200	19200	19200	19200	19200	19200	19200	19200
	16	0,9	14,4	160	19200	19200	19200	19200	19200	19200	19200	19200	19200	19200	19200	19200	19200	19200	19200	19200	19200
	16	1	16	160	19200	19200	19200	19200	19200	19200	19200	19200	19200	19200	19200	19200	19200	19200	19200	19200	19200

Series		Upstream device			OptiMat D100 N/H (40/65 kA at Ue = 400 V)									
OptiMat D250-TM020	In, A				40	45	50	56	63	70	80	90	95	100
		Setpoint	Ir, A	Isd, A	400	450	500	560	630	700	800	900	950	1000
	20	0,7	14	200	1200	1200	1200	1200	1200	1200	1200	1200	1200	1200
	20	0,8	16	200	1200	1200	1200	1200	1200	1200	1200	1200	1200	1200
	20	0,9	18	200	1200	1200	1200	1200	1200	1200	1200	1200	1200	1200
	20	1	20	200	1200	1200	1200	1200	1200	1200	1200	1200	1200	1200

Series		Upstream device			OptiMat D160 N/H (40/65 kA at Ue = 400 V)									
OptiMat D250-TM020	In, A				64	72	80	89,6	100,8	112	128	144	152	160
		Setpoint	Ir, A	Isd, A	640	720	800	896	1008	1120	1280	1440	1520	1600
	20	0,7	14	200	2000	2000	2000	2000	2000	2000	2000	2000	2000	2000
	20	0,8	16	200	2000	2000	2000	2000	2000	2000	2000	2000	2000	2000
	20	0,9	18	200	2000	2000	2000	2000	2000	2000	2000	2000	2000	2000
	20	1	20	200	2000	2000	2000	2000	2000	2000	2000	2000	2000	2000

Series		Upstream device			OptiMat D250 N/H (40/65 kA at Ue = 400 V)									
OptiMat D250-TM020	In, A				100	112,5	125	140	157,5	175	200	225	237,5	250
		Setpoint	Ir, A	Isd, A	1000	1125	1250	1400	1575	1750	2000	2250	2375	2500
	20	0,7	14	200	3000	3000	3000	3000	3000	3000	3000	3000	3000	3000
	20	0,8	16	200	3000	3000	3000	3000	3000	3000	3000	3000	3000	3000
	20	0,9	18	200	3000	3000	3000	3000	3000	3000	3000	3000	3000	3000
	20	1	20	200	3000	3000	3000	3000	3000	3000	3000	3000	3000	3000

		Upstream device															
Series		OptiMat D400 N/H (40/65 kA at Ue = 400 V)															
OptiMat D250-TM020	In, A				160	180	200	220	240	260	280	300	320	340	360	380	400
		Setpoint	Ir, A	Isd, A	1600	1800	2000	2200	2400	2600	2800	3000	3200	3400	3600	3800	4000
	20	0,7	14	200	5000	5000	5000	5000	5000	5000	5000	5000	5000	5000	5000	5000	5000
	20	0,8	16	200	5000	5000	5000	5000	5000	5000	5000	5000	5000	5000	5000	5000	5000
	20	0,9	18	200	5000	5000	5000	5000	5000	5000	5000	5000	5000	5000	5000	5000	5000
	20	1	20	200	5000	5000	5000	5000	5000	5000	5000	5000	5000	5000	5000	5000	5000

		Upstream device																					
Series		OptiMat D630 N/H (40/65 kA at Ue = 400 V)																					
OptiMat D250-TM020	In, A				250	270	290	310	330	350	370	390	410	430	450	470	490	510	530	550	570	590	610	630
		Setpoint	Ir, A	Isd, A	2500	2700	2900	3100	3300	3500	3700	3900	4100	4300	4500	4700	4900	5100	5300	5500	5700	5900	6100	6300
	20	0,7	14	200	7000	7000	7000	7000	7000	7000	7000	7000	7000	7000	7000	7000	7000	7000	7000	7000	7000	7000	7000	7000
	20	0,8	16	200	7000	7000	7000	7000	7000	7000	7000	7000	7000	7000	7000	7000	7000	7000	7000	7000	7000	7000	7000	7000
	20	0,9	18	200	7000	7000	7000	7000	7000	7000	7000	7000	7000	7000	7000	7000	7000	7000	7000	7000	7000	7000	7000	7000
	20	1	20	200	7000	7000	7000	7000	7000	7000	7000	7000	7000	7000	7000	7000	7000	7000	7000	7000	7000	7000	7000	7000

		Upstream device															
Series		OptiMat D800 N/H (50/85 kA at Ue = 400 V)															
OptiMat D250-TM020	In, A				320	360	400	440	480	520	560	600	640	680	720	760	800
		Setpoint	Ir, A	Isd, A	3200	3600	4000	4400	4800	5200	5600	6000	6400	6800	7200	7600	8000
	20	0,7	14	200	9600	9600	9600	9600	9600	9600	9600	9600	9600	9600	9600	9600	9600
	20	0,8	16	200	9600	9600	9600	9600	9600	9600	9600	9600	9600	9600	9600	9600	9600
	20	0,9	18	200	9600	9600	9600	9600	9600	9600	9600	9600	9600	9600	9600	9600	9600
	20	1	20	200	9600	9600	9600	9600	9600	9600	9600	9600	9600	9600	9600	9600	9600

		Upstream device															
Series		OptiMat D1000 N/H (50/85 kA at Ue = 400 V)															
OptiMat D250-TM020	In, A				400	450	500	550	600	650	700	750	800	850	900	950	1000
		Setpoint	Ir, A	Isd, A	4000	4500	5000	5500	6000	6500	7000	7500	8000	8500	9000	9500	10000
	20	0,7	14	200	12000	12000	12000	12000	12000	12000	12000	12000	12000	12000	12000	12000	12000
	20	0,8	16	200	12000	12000	12000	12000	12000	12000	12000	12000	12000	12000	12000	12000	12000
	20	0,9	18	200	12000	12000	12000	12000	12000	12000	12000	12000	12000	12000	12000	12000	12000
	20	1	20	200	12000	12000	12000	12000	12000	12000	12000	12000	12000	12000	12000	12000	12000

		Upstream device																			
Series		OptiMat D1250 N/H (50/85 kA at Ue = 400 V)																			
OptiMat D250-TM020	In, A				500	550	600	650	700	750	800	850	900	950	1000	1050	1100	1150	1200	1250
		Setpoint	Ir, A	Isd, A	5000	5500	6000	6500	7000	7500	8000	8500	9000	9500	10000	10500	11000	11500	12000	12500
	20	0,7	14	200	15000	15000	15000	15000	15000	15000	15000	15000	15000	15000	15000	15000	15000	15000	15000	15000
	20	0,8	16	200	15000	15000	15000	15000	15000	15000	15000	15000	15000	15000	15000	15000	15000	15000	15000	15000
	20	0,9	18	200	15000	15000	15000	15000	15000	15000	15000	15000	15000	15000	15000	15000	15000	15000	15000	15000
	20	1	20	200	15000	15000	15000	15000	15000	15000	15000	15000	15000	15000	15000	15000	15000	15000	15000	15000

		Upstream device																			
Series		OptiMat D1600 N/H (50/85 kA at Ue = 400 V)																			
OptiMat D250-TM020	In, A				640	700	760	820	880	940	1000	1060	1120	1180	1240	1300	1360	1420	1480	1540	1600
		Setpoint	Ir, A	Isd, A	6400	7000	7600	8200	8800	9400	10000	10600	11200	11800	12400	13000	13600	14200	14800	15400	16000
	20	0,7	14	200	19200	19200	19200	19200	19200	19200	19200	19200	19200	19200	19200	19200	19200	19200	19200	19200	19200
	20	0,8	16	200	19200	19200	19200	19200	19200	19200	19200	19200	19200	19200	19200	19200	19200	19200	19200	19200	19200
	20	0,9	18	200	19200	19200	19200	19200	19200	19200	19200	19200	19200	19200	19200	19200	19200	19200	19200	19200	19200
	20	1	20	200	19200	19200	19200	19200	19200	19200	19200	19200	19200	19200	19200	19200	19200	19200	19200	19200	19200

		Upstream device												
Series		OptiMat D100 N/H (40/65 kA at Ue = 400 V)												
OptiMat D250-TM025	In, A				40	45	50	56	63	70	80	90	95	100
		Setpoint	Ir, A	Isd, A	400	450	500	560	630	700	800	900	950	1000
	25	0,7	17,5	250	1200	1200	1200	1200	1200	1200	1200	1200	1200	1200
	25	0,8	20	250	1200	1200	1200	1200	1200	1200	1200	1200	1200	1200
	25	0,9	22,5	250	1200	1200	1200	1200	1200	1200	1200	1200	1200	1200
	25	1	25	250	1200	1200	1200	1200	1200	1200	1200	1200	1200	1200

		Upstream device												
Series		OptiMat D160 N/H (40/65 kA at Ue = 400 V)												
OptiMat D250-TM025	In, A				64	72	80	89,6	100,8	112	128	144	152	160
		Setpoint	Ir, A	Isd, A	640	720	800	896	1008	1120	1280	1440	1520	1600
	25	0,7	17,5	250	2000	2000	2000	2000	2000	2000	2000	2000	2000	2000
	25	0,8	20	250	2000	2000	2000	2000	2000	2000	2000	2000	2000	2000
	25	0,9	22,5	250	2000	2000	2000	2000	2000	2000	2000	2000	2000	2000
	25	1	25	250	2000	2000	2000	2000	2000	2000	2000	2000	2000	2000

		Upstream device												
Series		OptiMat D250 N/H (40/65 kA at Ue = 400 V)												
OptiMat D250-TM025	In, A				100	112,5	125	140	157,5	175	200	225	237,5	250
		Setpoint	Ir, A	Isd, A	1000	1125	1250	1400	1575	1750	2000	2250	2375	2500
	25	0,7	17,5	250	3000	3000	3000	3000	3000	3000	3000	3000	3000	3000
	25	0,8	20	250	3000	3000	3000	3000	3000	3000	3000	3000	3000	3000
	25	0,9	22,5	250	3000	3000	3000	3000	3000	3000	3000	3000	3000	3000
	25	1	25	250	3000	3000	3000	3000	3000	3000	3000	3000	3000	3000

		Upstream device														
Series		OptiMat D400 N/H (40/65 kA at Ue = 400 V)														
OptiMat D250-TM025	In, A				160	180	200	220	240	260	280	300	320	340	360	380	400
		Setpoint	Ir, A	Isd, A	1600	1800	2000	2200	2400	2600	2800	3000	3200	3400	3600	3800	4000
	25	0,7	17,5	250	5000	5000	5000	5000	5000	5000	5000	5000	5000	5000	5000	5000	5000
	25	0,8	20	250	5000	5000	5000	5000	5000	5000	5000	5000	5000	5000	5000	5000	5000
	25	0,9	22,5	250	5000	5000	5000	5000	5000	5000	5000	5000	5000	5000	5000	5000	5000
	25	1	25	250	5000	5000	5000	5000	5000	5000	5000	5000	5000	5000	5000	5000	5000

		Upstream device																					
Series		OptiMat D630 N/H (40/65 kA at Ue = 400 V)																					
OptiMat D250-TM025	In, A				250	270	290	310	330	350	370	390	410	430	450	470	490	510	530	550	570	590	610	630
		Setpoint	Ir, A	Isd, A	2500	2700	2900	3100	3300	3500	3700	3900	4100	4300	4500	4700	4900	5100	5300	5500	5700	5900	6100	6300
	25	0,7	17,5	250	7000	7000	7000	7000	7000	7000	7000	7000	7000	7000	7000	7000	7000	7000	7000	7000	7000	7000	7000	7000
	25	0,8	20	250	7000	7000	7000	7000	7000	7000	7000	7000	7000	7000	7000	7000	7000	7000	7000	7000	7000	7000	7000	7000
	25	0,9	22,5	250	7000	7000	7000	7000	7000	7000	7000	7000	7000	7000	7000	7000	7000	7000	7000	7000	7000	7000	7000	7000
	25	1	25	250	7000	7000	7000	7000	7000	7000	7000	7000	7000	7000	7000	7000	7000	7000	7000	7000	7000	7000	7000	7000

		Upstream device															
Series		OptiMat D800 N/H (50/85 kA at Ue = 400 V)															
OptiMat D250-TM025	In, A				320	360	400	440	480	520	560	600	640	680	720	760	800
		Setpoint	Ir, A	Isd, A	3200	3600	4000	4400	4800	5200	5600	6000	6400	6800	7200	7600	8000
	25	0,7	17,5	250	9600	9600	9600	9600	9600	9600	9600	9600	9600	9600	9600	9600	9600
	25	0,8	20	250	9600	9600	9600	9600	9600	9600	9600	9600	9600	9600	9600	9600	9600
	25	0,9	22,5	250	9600	9600	9600	9600	9600	9600	9600	9600	9600	9600	9600	9600	9600
	25	1	25	250	9600	9600	9600	9600	9600	9600	9600	9600	9600	9600	9600	9600	9600

		Upstream device															
Series		OptiMat D1000 N/H (50/85 kA at Ue = 400 V)															
OptiMat D250-TM025	In, A				400	450	500	550	600	650	700	750	800	850	900	950	1000
		Setpoint	Ir, A	Isd, A	4000	4500	5000	5500	6000	6500	7000	7500	8000	8500	9000	9500	10000
	25	0,7	17,5	250	12000	12000	12000	12000	12000	12000	12000	12000	12000	12000	12000	12000	12000
	25	0,8	20	250	12000	12000	12000	12000	12000	12000	12000	12000	12000	12000	12000	12000	12000
	25	0,9	22,5	250	12000	12000	12000	12000	12000	12000	12000	12000	12000	12000	12000	12000	12000
	25	1	25	250	12000	12000	12000	12000	12000	12000	12000	12000	12000	12000	12000	12000	12000

		Upstream device																			
Series		OptiMat D1250 N/H (50/85 kA at Ue = 400 V)																			
OptiMat D250-TM025	In, A				500	550	600	650	700	750	800	850	900	950	1000	1050	1100	1150	1200	1250
		Setpoint	Ir, A	Isd, A	5000	5500	6000	6500	7000	7500	8000	8500	9000	9500	10000	10500	11000	11500	12000	12500
	25	0,7	17,5	250	15000	15000	15000	15000	15000	15000	15000	15000	15000	15000	15000	15000	15000	15000	15000	15000
	25	0,8	20	250	15000	15000	15000	15000	15000	15000	15000	15000	15000	15000	15000	15000	15000	15000	15000	15000
	25	0,9	22,5	250	15000	15000	15000	15000	15000	15000	15000	15000	15000	15000	15000	15000	15000	15000	15000	15000
	25	1	25	250	15000	15000	15000	15000	15000	15000	15000	15000	15000	15000	15000	15000	15000	15000	15000	15000

		Upstream device																			
Series		OptiMat D1600 N/H (50/85 kA at Ue = 400 V)																			
OptiMat D250-TM025	In, A				640	700	760	820	880	940	1000	1060	1120	1180	1240	1300	1360	1420	1480	1540	1600
		Setpoint	Ir, A	Isd, A	6400	7000	7600	8200	8800	9400	10000	10600	11200	11800	12400	13000	13600	14200	14800	15400	16000
	25	0,7	17,5	250	19200	19200	19200	19200	19200	19200	19200	19200	19200	19200	19200	19200	19200	19200	19200	19200	19200
	25	0,8	20	250	19200	19200	19200	19200	19200	19200	19200	19200	19200	19200	19200	19200	19200	19200	19200	19200	19200
	25	0,9	22,5	250	19200	19200	19200	19200	19200	19200	19200	19200	19200	19200	19200	19200	19200	19200	19200	19200	19200
	25	1	25	250	19200	19200	19200	19200	19200	19200	19200	19200	19200	19200	19200	19200	19200	19200	19200	19200	19200

		Upstream device												
Series		OptiMat D100 N/H (40/65 kA at Ue = 400 V)												
OptiMat D250-TM032	In, A				40	45	50	56	63	70	80	90	95	100
		Setpoint	Ir, A	Isd, A	400	450	500	560	630	700	800	900	950	1000
	32	0,7	22,4	320			1200	1200	1200	1200	1200	1200	1200	1200
	32	0,8	25,6	320			1200	1200	1200	1200	1200	1200	1200	1200
	32	0,9	28,8	320			1200	1200	1200	1200	1200	1200	1200	1200
	32	1	32	320				1200	1200	1200	1200	1200	1200	1200

		Upstream device												
Series		OptiMat D160 N/H (40/65 kA at Ue = 400 V)												
OptiMat D250-TM032	In, A				64	72	80	89,6	100,8	112	128	144	152	160
		Setpoint	Ir, A	Isd, A	640	720	800	896	1008	1120	1280	1440	1520	1600
	32	0,7	22,4	320	2000	2000	2000	2000	2000	2000	2000	2000	2000	2000
	32	0,8	25,6	320	2000	2000	2000	2000	2000	2000	2000	2000	2000	2000
	32	0,9	28,8	320	2000	2000	2000	2000	2000	2000	2000	2000	2000	2000
	32	1	32	320	2000	2000	2000	2000	2000	2000	2000	2000	2000	2000

		Upstream device												
Series		OptiMat D250 N/H (40/65 kA at Ue = 400 V)												
OptiMat D250-TM032	In, A				100	112,5	125	140	157,5	175	200	225	237,5	250
		Setpoint	Ir, A	Isd, A	1000	1125	1250	1400	1575	1750	2000	2250	2375	2500
	32	0,7	22,4	320	3000	3000	3000	3000	3000	3000	3000	3000	3000	3000
	32	0,8	25,6	320	3000	3000	3000	3000	3000	3000	3000	3000	3000	3000
	32	0,9	28,8	320	3000	3000	3000	3000	3000	3000	3000	3000	3000	3000
	32	1	32	320	3000	3000	3000	3000	3000	3000	3000	3000	3000	3000

		Upstream device															
Series		OptiMat D400 N/H (40/65 kA at Ue = 400 V)															
OptiMat D250-TM032	In, A				160	180	200	220	240	260	280	300	320	340	360	380	400
		Setpoint	Ir, A	Isd, A	1600	1800	2000	2200	2400	2600	2800	3000	3200	3400	3600	3800	4000
	32	0,7	22,4	320	5000	5000	5000	5000	5000	5000	5000	5000	5000	5000	5000	5000	5000
	32	0,8	25,6	320	5000	5000	5000	5000	5000	5000	5000	5000	5000	5000	5000	5000	5000
	32	0,9	28,8	320	5000	5000	5000	5000	5000	5000	5000	5000	5000	5000	5000	5000	5000
	32	1	32	320	5000	5000	5000	5000	5000	5000	5000	5000	5000	5000	5000	5000	5000

		Upstream device																					
Series		OptiMat D630 N/H (40/65 kA at Ue = 400 V)																					
OptiMat D250-TM032	In, A				250	270	290	310	330	350	370	390	410	430	450	470	490	510	530	550	570	590	610	630
		Setpoint	Ir, A	Isd, A	2500	2700	2900	3100	3300	3500	3700	3900	4100	4300	4500	4700	4900	5100	5300	5500	5700	5900	6100	6300
	32	0,7	22,4	320	7000	7000	7000	7000	7000	7000	7000	7000	7000	7000	7000	7000	7000	7000	7000	7000	7000	7000	7000	7000
	32	0,8	25,6	320	7000	7000	7000	7000	7000	7000	7000	7000	7000	7000	7000	7000	7000	7000	7000	7000	7000	7000	7000	7000
	32	0,9	28,8	320	7000	7000	7000	7000	7000	7000	7000	7000	7000	7000	7000	7000	7000	7000	7000	7000	7000	7000	7000	7000
	32	1	32	320	7000	7000	7000	7000	7000	7000	7000	7000	7000	7000	7000	7000	7000	7000	7000	7000	7000	7000	7000	7000

		Upstream device															
Series		OptiMat D800 N/H (50/85 kA at Ue = 400 V)															
OptiMat D250-TM032	In, A				320	360	400	440	480	520	560	600	640	680	720	760	800
		Setpoint	Ir, A	Isd, A	3200	3600	4000	4400	4800	5200	5600	6000	6400	6800	7200	7600	8000
	32	0,7	22,4	320	9600	9600	9600	9600	9600	9600	9600	9600	9600	9600	9600	9600	9600
	32	0,8	25,6	320	9600	9600	9600	9600	9600	9600	9600	9600	9600	9600	9600	9600	9600
	32	0,9	28,8	320	9600	9600	9600	9600	9600	9600	9600	9600	9600	9600	9600	9600	9600
	32	1	32	320	9600	9600	9600	9600	9600	9600	9600	9600	9600	9600	9600	9600	9600

		Upstream device															
Series		OptiMat D1000 N/H (50/85 kA at Ue = 400 V)															
OptiMat D250-TM032	In, A				400	450	500	550	600	650	700	750	800	850	900	950	1000
		Setpoint	Ir, A	Isd, A	4000	4500	5000	5500	6000	6500	7000	7500	8000	8500	9000	9500	10000
	32	0,7	22,4	320	12000	12000	12000	12000	12000	12000	12000	12000	12000	12000	12000	12000	12000
	32	0,8	25,6	320	12000	12000	12000	12000	12000	12000	12000	12000	12000	12000	12000	12000	12000
	32	0,9	28,8	320	12000	12000	12000	12000	12000	12000	12000	12000	12000	12000	12000	12000	12000
	32	1	32	320	12000	12000	12000	12000	12000	12000	12000	12000	12000	12000	12000	12000	12000

		Upstream device																			
Series		OptiMat D1250 N/H (50/85 kA at Ue = 400 V)																			
OptiMat D250-TM032	In, A				500	550	600	650	700	750	800	850	900	950	1000	1050	1100	1150	1200	1250
		Setpoint	Ir, A	Isd, A	5000	5500	6000	6500	7000	7500	8000	8500	9000	9500	10000	10500	11000	11500	12000	12500
	32	0,7	22,4	320	15000	15000	15000	15000	15000	15000	15000	15000	15000	15000	15000	15000	15000	15000	15000	15000
	32	0,8	25,6	320	15000	15000	15000	15000	15000	15000	15000	15000	15000	15000	15000	15000	15000	15000	15000	15000
	32	0,9	28,8	320	15000	15000	15000	15000	15000	15000	15000	15000	15000	15000	15000	15000	15000	15000	15000	15000
	32	1	32	320	15000	15000	15000	15000	15000	15000	15000	15000	15000	15000	15000	15000	15000	15000	15000	15000

		Upstream device																			
Series		OptiMat D1600 N/H (50/85 kA at Ue = 400 V)																			
OptiMat D250-TM032	In, A				640	700	760	820	880	940	1000	1060	1120	1180	1240	1300	1360	1420	1480	1540	1600
		Setpoint	Ir, A	Isd, A	6400	7000	7600	8200	8800	9400	10000	10600	11200	11800	12400	13000	13600	14200	14800	15400	16000
	32	0,7	22,4	320	19200	19200	19200	19200	19200	19200	19200	19200	19200	19200	19200	19200	19200	19200	19200	19200	19200
	32	0,8	25,6	320	19200	19200	19200	19200	19200	19200	19200	19200	19200	19200	19200	19200	19200	19200	19200	19200	19200
	32	0,9	28,8	320	19200	19200	19200	19200	19200	19200	19200	19200	19200	19200	19200	19200	19200	19200	19200	19200	19200
	32	1	32	320	19200	19200	19200	19200	19200	19200	19200	19200	19200	19200	19200	19200	19200	19200	19200	19200	19200

		Upstream device												
Series		OptiMat D100 N/H (40/65 kA at Ue = 400 V)												
OptiMat D250-TM040	In, A				40	45	50	56	63	70	80	90	95	100
		Setpoint	Ir, A	Isd, A	400	450	500	560	630	700	800	900	950	1000
	40	0,7	28	400					1200	1200	1200	1200	1200	1200
	40	0,8	32	400					1200	1200	1200	1200	1200	1200
	40	0,9	36	400					1200	1200	1200	1200	1200	1200
	40	1	40	400						1200	1200	1200	1200	1200

		Upstream device												
Series		OptiMat D160 N/H (40/65 kA at Ue = 400 V)												
OptiMat D250-TM040	In, A				64	72	80	89,6	100,8	112	128	144	152	160
		Setpoint	Ir, A	Isd, A	640	720	800	896	1008	1120	1280	1440	1520	1600
	40	0,7	28	400	2000	2000	2000	2000	2000	2000	2000	2000	2000	2000
	40	0,8	32	400	2000	2000	2000	2000	2000	2000	2000	2000	2000	2000
	40	0,9	36	400	2000	2000	2000	2000	2000	2000	2000	2000	2000	2000
	40	1	40	400	2000	2000	2000	2000	2000	2000	2000	2000	2000	2000

		Upstream device												
Series		OptiMat D250 N/H (40/65 kA at Ue = 400 V)												
OptiMat D250-TM040	In, A				100	112,5	125	140	157,5	175	200	225	237,5	250
		Setpoint	Ir, A	Isd, A	1000	1125	1250	1400	1575	1750	2000	2250	2375	2500
	40	0,7	28	400	3000	3000	3000	3000	3000	3000	3000	3000	3000	3000
	40	0,8	32	400	3000	3000	3000	3000	3000	3000	3000	3000	3000	3000
	40	0,9	36	400	3000	3000	3000	3000	3000	3000	3000	3000	3000	3000
	40	1	40	400	3000	3000	3000	3000	3000	3000	3000	3000	3000	3000

		Upstream device														
Series		OptiMat D400 N/H (40/65 kA at Ue = 400 V)														
OptiMat D250-TM040	In, A				160	180	200	220	240	260	280	300	320	340	360	380	400
		Setpoint	Ir, A	Isd, A	1600	1800	2000	2200	2400	2600	2800	3000	3200	3400	3600	3800	4000
	40	0,7	28	400	5000	5000	5000	5000	5000	5000	5000	5000	5000	5000	5000	5000	5000
	40	0,8	32	400	5000	5000	5000	5000	5000	5000	5000	5000	5000	5000	5000	5000	5000
	40	0,9	36	400	5000	5000	5000	5000	5000	5000	5000	5000	5000	5000	5000	5000	5000
	40	1	40	400	5000	5000	5000	5000	5000	5000	5000	5000	5000	5000	5000	5000	5000

		Upstream device																						
Series		OptiMat D630 N/H (40/65 kA at Ue = 400 V)																						
OptiMat D250-TM040	In, A				250	270	290	310	330	350	370	390	410	430	450	470	490	510	530	550	570	590	610	630
		Setpoint	Ir, A	Isd, A	2500	2700	2900	3100	3300	3500	3700	3900	4100	4300	4500	4700	4900	5100	5300	5500	5700	5900	6100	6300
	40	0,7	28	400	7000	7000	7000	7000	7000	7000	7000	7000	7000	7000	7000	7000	7000	7000	7000	7000	7000	7000	7000	7000
	40	0,8	32	400	7000	7000	7000	7000	7000	7000	7000	7000	7000	7000	7000	7000	7000	7000	7000	7000	7000	7000	7000	7000
	40	0,9	36	400	7000	7000	7000	7000	7000	7000	7000	7000	7000	7000	7000	7000	7000	7000	7000	7000	7000	7000	7000	7000
	40	1	40	400	7000	7000	7000	7000	7000	7000	7000	7000	7000	7000	7000	7000	7000	7000	7000	7000	7000	7000	7000	7000

		Upstream device															
Series		OptiMat D800 N/H (50/85 kA at Ue = 400 V)															
OptiMat D250-TM040	In, A				320	360	400	440	480	520	560	600	640	680	720	760	800
		Setpoint	Ir, A	Isd, A	3200	3600	4000	4400	4800	5200	5600	6000	6400	6800	7200	7600	8000
	40	0,7	28	400	9600	9600	9600	9600	9600	9600	9600	9600	9600	9600	9600	9600	9600
	40	0,8	32	400	9600	9600	9600	9600	9600	9600	9600	9600	9600	9600	9600	9600	9600
	40	0,9	36	400	9600	9600	9600	9600	9600	9600	9600	9600	9600	9600	9600	9600	9600
	40	1	40	400	9600	9600	9600	9600	9600	9600	9600	9600	9600	9600	9600	9600	9600

		Upstream device															
Series		OptiMat D1000 N/H (50/85 kA at Ue = 400 V)															
OptiMat D250-TM040	In, A				400	450	500	550	600	650	700	750	800	850	900	950	1000
		Setpoint	Ir, A	Isd, A	4000	4500	5000	5500	6000	6500	7000	7500	8000	8500	9000	9500	10000
	40	0,7	28	400	12000	12000	12000	12000	12000	12000	12000	12000	12000	12000	12000	12000	12000
	40	0,8	32	400	12000	12000	12000	12000	12000	12000	12000	12000	12000	12000	12000	12000	12000
	40	0,9	36	400	12000	12000	12000	12000	12000	12000	12000	12000	12000	12000	12000	12000	12000
	40	1	40	400	12000	12000	12000	12000	12000	12000	12000	12000	12000	12000	12000	12000	12000

		Upstream device																			
Series		OptiMat D1250 N/H (50/85 kA at Ue = 400 V)																			
OptiMat D250-TM040	In, A				500	550	600	650	700	750	800	850	900	950	1000	1050	1100	1150	1200	1250
		Setpoint	Ir, A	Isd, A	5000	5500	6000	6500	7000	7500	8000	8500	9000	9500	10000	10500	11000	11500	12000	12500
	40	0,7	28	400	15000	15000	15000	15000	15000	15000	15000	15000	15000	15000	15000	15000	15000	15000	15000	15000
	40	0,8	32	400	15000	15000	15000	15000	15000	15000	15000	15000	15000	15000	15000	15000	15000	15000	15000	15000
	40	0,9	36	400	15000	15000	15000	15000	15000	15000	15000	15000	15000	15000	15000	15000	15000	15000	15000	15000
	40	1	40	400	15000	15000	15000	15000	15000	15000	15000	15000	15000	15000	15000	15000	15000	15000	15000	15000

		Upstream device																			
Series		OptiMat D1600 N/H (50/85 kA at Ue = 400 V)																			
OptiMat D250-TM040	In, A				640	700	760	820	880	940	1000	1060	1120	1180	1240	1300	1360	1420	1480	1540	1600
		Setpoint	Ir, A	Isd, A	6400	7000	7600	8200	8800	9400	10000	10600	11200	11800	12400	13000	13600	14200	14800	15400	16000
	40	0,7	28	400	19200	19200	19200	19200	19200	19200	19200	19200	19200	19200	19200	19200	19200	19200	19200	19200	19200
	40	0,8	32	400	19200	19200	19200	19200	19200	19200	19200	19200	19200	19200	19200	19200	19200	19200	19200	19200	19200
	40	0,9	36	400	19200	19200	19200	19200	19200	19200	19200	19200	19200	19200	19200	19200	19200	19200	19200	19200	19200
	40	1	40	400	19200	19200	19200	19200	19200	19200	19200	19200	19200	19200	19200	19200	19200	19200	19200	19200	19200

		Upstream device												
Series		OptiMat D100 N/H (40/65 kA at Ue = 400 V)												
OptiMat D250-TM050	In, A				40	45	50	56	63	70	80	90	95	100
		Setpoint	Ir, A	Isd, A	400	450	500	560	630	700	800	900	950	1000
	50	0,7	35	500							1200	1200	1200	1200
	50	0,8	40	500							1200	1200	1200	1200
	50	0,9	45	500							1200	1200	1200	1200
	50	1	50	500							1200	1200	1200	1200

		Upstream device												
Series		OptiMat D160 N/H (40/65 kA at Ue = 400 V)												
OptiMat D250-TM050	In, A				64	72	80	89,6	100,8	112	128	144	152	160
		Setpoint	Ir, A	Isd, A	640	720	800	896	1008	1120	1280	1440	1520	1600
	50	0,7	35	500			2000	2000	2000	2000	2000	2000	2000	2000
	50	0,8	40	500			2000	2000	2000	2000	2000	2000	2000	2000
	50	0,9	45	500			2000	2000	2000	2000	2000	2000	2000	2000
	50	1	50	500			2000	2000	2000	2000	2000	2000	2000	2000

		Upstream device												
Series		OptiMat D250 N/H (40/65 kA at Ue = 400 V)												
OptiMat D250-TM050	In, A				100	112,5	125	140	157,5	175	200	225	237,5	250
		Setpoint	Ir, A	Isd, A	1000	1125	1250	1400	1575	1750	2000	2250	2375	2500
	50	0,7	35	500	3000	3000	3000	3000	3000	3000	3000	3000	3000	3000
	50	0,8	40	500	3000	3000	3000	3000	3000	3000	3000	3000	3000	3000
	50	0,9	45	500	3000	3000	3000	3000	3000	3000	3000	3000	3000	3000
	50	1	50	500	3000	3000	3000	3000	3000	3000	3000	3000	3000	3000

		Upstream device															
Series		OptiMat D400 N/H (40/65 kA at Ue = 400 V)															
OptiMat D250-TM050	In, A				160	180	200	220	240	260	280	300	320	340	360	380	400
		Setpoint	Ir, A	Isd, A	1600	1800	2000	2200	2400	2600	2800	3000	3200	3400	3600	3800	4000
	50	0,7	35	500	5000	5000	5000	5000	5000	5000	5000	5000	5000	5000	5000	5000	5000
	50	0,8	40	500	5000	5000	5000	5000	5000	5000	5000	5000	5000	5000	5000	5000	5000
	50	0,9	45	500	5000	5000	5000	5000	5000	5000	5000	5000	5000	5000	5000	5000	5000
	50	1	50	500	5000	5000	5000	5000	5000	5000	5000	5000	5000	5000	5000	5000	5000

		Upstream device																					
Series		OptiMat D630 N/H (40/65 kA at Ue = 400 V)																					
OptiMat D250-TM050	In, A				250	270	290	310	330	350	370	390	410	430	450	470	490	510	530	550	570	590	610	630
		Setpoint	Ir, A	Isd, A	2500	2700	2900	3100	3300	3500	3700	3900	4100	4300	4500	4700	4900	5100	5300	5500	5700	5900	6100	6300
	50	0,7	35	500	7000	7000	7000	7000	7000	7000	7000	7000	7000	7000	7000	7000	7000	7000	7000	7000	7000	7000	7000	7000
	50	0,8	40	500	7000	7000	7000	7000	7000	7000	7000	7000	7000	7000	7000	7000	7000	7000	7000	7000	7000	7000	7000	7000
	50	0,9	45	500	7000	7000	7000	7000	7000	7000	7000	7000	7000	7000	7000	7000	7000	7000	7000	7000	7000	7000	7000	7000
	50	1	50	500	7000	7000	7000	7000	7000	7000	7000	7000	7000	7000	7000	7000	7000	7000	7000	7000	7000	7000	7000	7000

		Upstream device															
Series		OptiMat D800 N/H (50/85 kA at Ue = 400 V)															
OptiMat D250-TM050	In, A				320	360	400	440	480	520	560	600	640	680	720	760	800
		Setpoint	Ir, A	Isd, A	3200	3600	4000	4400	4800	5200	5600	6000	6400	6800	7200	7600	8000
	50	0,7	35	500	9600	9600	9600	9600	9600	9600	9600	9600	9600	9600	9600	9600	9600
	50	0,8	40	500	9600	9600	9600	9600	9600	9600	9600	9600	9600	9600	9600	9600	9600
	50	0,9	45	500	9600	9600	9600	9600	9600	9600	9600	9600	9600	9600	9600	9600	9600
	50	1	50	500	9600	9600	9600	9600	9600	9600	9600	9600	9600	9600	9600	9600	9600

		Upstream device															
Series		OptiMat D1000 N/H (50/85 kA at Ue = 400 V)															
OptiMat D250-TM050	In, A				400	450	500	550	600	650	700	750	800	850	900	950	1000
		Setpoint	Ir, A	Isd, A	4000	4500	5000	5500	6000	6500	7000	7500	8000	8500	9000	9500	10000
	50	0,7	35	500	12000	12000	12000	12000	12000	12000	12000	12000	12000	12000	12000	12000	12000
	50	0,8	40	500	12000	12000	12000	12000	12000	12000	12000	12000	12000	12000	12000	12000	12000
	50	0,9	45	500	12000	12000	12000	12000	12000	12000	12000	12000	12000	12000	12000	12000	12000
	50	1	50	500	12000	12000	12000	12000	12000	12000	12000	12000	12000	12000	12000	12000	12000

		Upstream device																			
Series		OptiMat D1250 N/H (50/85 kA at Ue = 400 V)																			
OptiMat D250-TM050	In, A				500	550	600	650	700	750	800	850	900	950	1000	1050	1100	1150	1200	1250
		Setpoint	Ir, A	Isd, A	5000	5500	6000	6500	7000	7500	8000	8500	9000	9500	10000	10500	11000	11500	12000	12500
	50	0,7	35	500	15000	15000	15000	15000	15000	15000	15000	15000	15000	15000	15000	15000	15000	15000	15000	15000
	50	0,8	40	500	15000	15000	15000	15000	15000	15000	15000	15000	15000	15000	15000	15000	15000	15000	15000	15000
	50	0,9	45	500	15000	15000	15000	15000	15000	15000	15000	15000	15000	15000	15000	15000	15000	15000	15000	15000
	50	1	50	500	15000	15000	15000	15000	15000	15000	15000	15000	15000	15000	15000	15000	15000	15000	15000	15000

		Upstream device																			
Series		OptiMat D1600 N/H (50/85 kA at Ue = 400 V)																			
OptiMat D250-TM050	In, A				640	700	760	820	880	940	1000	1060	1120	1180	1240	1300	1360	1420	1480	1540	1600
		Setpoint	Ir, A	Isd, A	6400	7000	7600	8200	8800	9400	10000	10600	11200	11800	12400	13000	13600	14200	14800	15400	16000
	50	0,7	35	500	19200	19200	19200	19200	19200	19200	19200	19200	19200	19200	19200	19200	19200	19200	19200	19200	19200
	50	0,8	40	500	19200	19200	19200	19200	19200	19200	19200	19200	19200	19200	19200	19200	19200	19200	19200	19200	19200
	50	0,9	45	500	19200	19200	19200	19200	19200	19200	19200	19200	19200	19200	19200	19200	19200	19200	19200	19200	19200
	50	1	50	500	19200	19200	19200	19200	19200	19200	19200	19200	19200	19200	19200	19200	19200	19200	19200	19200	19200

		Upstream device												
Series		OptiMat D100 N/H (40/65 kA at Ue = 400 V)												
OptiMat D250-TM063	In, A				40	45	50	56	63	70	80	90	95	100
		Setpoint	Ir, A	Isd, A	400	450	500	560	630	700	800	900	950	1000
	63	0,7	44,1	630									1200	1200
	63	0,8	50,4	630									1200	1200
	63	0,9	56,7	630									1200	1200
	63	1	63	630										

		Upstream device												
Series		OptiMat D160 N/H (40/65 kA at Ue = 400 V)												
OptiMat D250-TM063	In, A				64	72	80	89,6	100,8	112	128	144	152	160
		Setpoint	Ir, A	Isd, A	640	720	800	896	1008	1120	1280	1440	1520	1600
	63	0,7	44,1	630					2000	2000	2000	2000	2000	2000
	63	0,8	50,4	630					2000	2000	2000	2000	2000	2000
	63	0,9	56,7	630					2000	2000	2000	2000	2000	2000
	63	1	63	630					2000	2000	2000	2000	2000	2000

		Upstream device												
Series		OptiMat D250 N/H (40/65 kA at Ue = 400 V)												
OptiMat D250-TM063	In, A				100	112,5	125	140	157,5	175	200	225	237,5	250
		Setpoint	Ir, A	Isd, A	1000	1125	1250	1400	1575	1750	2000	2250	2375	2500
	63	0,7	44,1	630	3000	3000	3000	3000	3000	3000	3000	3000	3000	3000
	63	0,8	50,4	630	3000	3000	3000	3000	3000	3000	3000	3000	3000	3000
	63	0,9	56,7	630	3000	3000	3000	3000	3000	3000	3000	3000	3000	3000
	63	1	63	630		3000	3000	3000	3000	3000	3000	3000	3000	3000

		Upstream device															
Series		OptiMat D400 N/H (40/65 kA at Ue = 400 V)															
OptiMat D250-TM063	In, A				160	180	200	220	240	260	280	300	320	340	360	380	400
		Setpoint	Ir, A	Isd, A	1600	1800	2000	2200	2400	2600	2800	3000	3200	3400	3600	3800	4000
	63	0,7	44,1	630	5000	5000	5000	5000	5000	5000	5000	5000	5000	5000	5000	5000	5000
	63	0,8	50,4	630	5000	5000	5000	5000	5000	5000	5000	5000	5000	5000	5000	5000	5000
	63	0,9	56,7	630	5000	5000	5000	5000	5000	5000	5000	5000	5000	5000	5000	5000	5000
	63	1	63	630	5000	5000	5000	5000	5000	5000	5000	5000	5000	5000	5000	5000	5000

		Upstream device																					
Series		OptiMat D630 N/H (40/65 kA at Ue = 400 V)																					
OptiMat D250-TM063	In, A				250	270	290	310	330	350	370	390	410	430	450	470	490	510	530	550	570	590	610	630
		Setpoint	Ir, A	Isd, A	2500	2700	2900	3100	3300	3500	3700	3900	4100	4300	4500	4700	4900	5100	5300	5500	5700	5900	6100	6300
	63	0,7	44,1	630	7000	7000	7000	7000	7000	7000	7000	7000	7000	7000	7000	7000	7000	7000	7000	7000	7000	7000	7000	7000
	63	0,8	50,4	630	7000	7000	7000	7000	7000	7000	7000	7000	7000	7000	7000	7000	7000	7000	7000	7000	7000	7000	7000	7000
	63	0,9	56,7	630	7000	7000	7000	7000	7000	7000	7000	7000	7000	7000	7000	7000	7000	7000	7000	7000	7000	7000	7000	7000
	63	1	63	630	7000	7000	7000	7000	7000	7000	7000	7000	7000	7000	7000	7000	7000	7000	7000	7000	7000	7000	7000	7000

		Upstream device															
Series		OptiMat D800 N/H (50/85 kA at Ue = 400 V)															
OptiMat D250-TM063	In, A				320	360	400	440	480	520	560	600	640	680	720	760	800
		Setpoint	Ir, A	Isd, A	3200	3600	4000	4400	4800	5200	5600	6000	6400	6800	7200	7600	8000
	63	0,7	44,1	630	9600	9600	9600	9600	9600	9600	9600	9600	9600	9600	9600	9600	9600
	63	0,8	50,4	630	9600	9600	9600	9600	9600	9600	9600	9600	9600	9600	9600	9600	9600
	63	0,9	56,7	630	9600	9600	9600	9600	9600	9600	9600	9600	9600	9600	9600	9600	9600
	63	1	63	630	9600	9600	9600	9600	9600	9600	9600	9600	9600	9600	9600	9600	9600

		Upstream device															
Series		OptiMat D1000 N/H (50/85 kA at Ue = 400 V)															
OptiMat D250-TM063	In, A				400	450	500	550	600	650	700	750	800	850	900	950	1000
		Setpoint	Ir, A	Isd, A	4000	4500	5000	5500	6000	6500	7000	7500	8000	8500	9000	9500	10000
	63	0,7	44,1	630	12000	12000	12000	12000	12000	12000	12000	12000	12000	12000	12000	12000	12000
	63	0,8	50,4	630	12000	12000	12000	12000	12000	12000	12000	12000	12000	12000	12000	12000	12000
	63	0,9	56,7	630	12000	12000	12000	12000	12000	12000	12000	12000	12000	12000	12000	12000	12000
	63	1	63	630	12000	12000	12000	12000	12000	12000	12000	12000	12000	12000	12000	12000	12000

		Upstream device																			
Series		OptiMat D1250 N/H (50/85 kA at Ue = 400 V)																			
OptiMat D250-TM063	In, A				500	550	600	650	700	750	800	850	900	950	1000	1050	1100	1150	1200	1250
		Setpoint	Ir, A	Isd, A	5000	5500	6000	6500	7000	7500	8000	8500	9000	9500	10000	10500	11000	11500	12000	12500
	63	0,7	44,1	630	15000	15000	15000	15000	15000	15000	15000	15000	15000	15000	15000	15000	15000	15000	15000	15000
	63	0,8	50,4	630	15000	15000	15000	15000	15000	15000	15000	15000	15000	15000	15000	15000	15000	15000	15000	15000
	63	0,9	56,7	630	15000	15000	15000	15000	15000	15000	15000	15000	15000	15000	15000	15000	15000	15000	15000	15000
	63	1	63	630	15000	15000	15000	15000	15000	15000	15000	15000	15000	15000	15000	15000	15000	15000	15000	15000

		Upstream device																			
Series		OptiMat D1600 N/H (50/85 kA at Ue = 400 V)																			
OptiMat D250-TM063	In, A				640	700	760	820	880	940	1000	1060	1120	1180	1240	1300	1360	1420	1480	1540	1600
		Setpoint	Ir, A	Isd, A	6400	7000	7600	8200	8800	9400	10000	10600	11200	11800	12400	13000	13600	14200	14800	15400	16000
	63	0,7	44,1	630	19200	19200	19200	19200	19200	19200	19200	19200	19200	19200	19200	19200	19200	19200	19200	19200	19200
	63	0,8	50,4	630	19200	19200	19200	19200	19200	19200	19200	19200	19200	19200	19200	19200	19200	19200	19200	19200	19200
	63	0,9	56,7	630	19200	19200	19200	19200	19200	19200	19200	19200	19200	19200	19200	19200	19200	19200	19200	19200	19200
	63	1	63	630	19200	19200	19200	19200	19200	19200	19200	19200	19200	19200	19200	19200	19200	19200	19200	19200	19200

		Upstream device												
Series		OptiMat D100 N/H (40/65 kA at Ue = 400 V)												
OptiMat D250-TM080	In, A				40	45	50	56	63	70	80	90	95	100
		Setpoint	Ir, A	Isd, A	400	450	500	560	630	700	800	900	950	1000
	80	0,7	56	800										
	80	0,8	64	800										
	80	0,9	72	800										
	80	1	80	800										

		Upstream device												
Series		OptiMat D160 N/H (40/65 kA at Ue = 400 V)												
OptiMat D250-TM080	In, A				64	72	80	89,6	100,8	112	128	144	152	160
		Setpoint	Ir, A	Isd, A	640	720	800	896	1008	1120	1280	1440	1520	1600
	80	0,7	56	800							2000	2000	2000	2000
	80	0,8	64	800							2000	2000	2000	2000
	80	0,9	72	800							2000	2000	2000	2000
	80	1	80	800							2000	2000	2000	2000

		Upstream device												
Series		OptiMat D250 N/H (40/65 kA at Ue = 400 V)												
OptiMat D250-TM080	In, A				100	112,5	125	140	157,5	175	200	225	237,5	250
		Setpoint	Ir, A	Isd, A	1000	1125	1250	1400	1575	1750	2000	2250	2375	2500
	80	0,7	56	800			3000	3000	3000	3000	3000	3000	3000	3000
	80	0,8	64	800			3000	3000	3000	3000	3000	3000	3000	3000
	80	0,9	72	800			3000	3000	3000	3000	3000	3000	3000	3000
	80	1	80	800				3000	3000	3000	3000	3000	3000	3000

		Upstream device															
Series		OptiMat D400 N/H (40/65 kA at Ue = 400 V)															
OptiMat D250-TM080	In, A				160	180	200	220	240	260	280	300	320	340	360	380	400
		Setpoint	Ir, A	Isd, A	1600	1800	2000	2200	2400	2600	2800	3000	3200	3400	3600	3800	4000
	80	0,7	56	800	5000	5000	5000	5000	5000	5000	5000	5000	5000	5000	5000	5000	5000
	80	0,8	64	800	5000	5000	5000	5000	5000	5000	5000	5000	5000	5000	5000	5000	5000
	80	0,9	72	800	5000	5000	5000	5000	5000	5000	5000	5000	5000	5000	5000	5000	5000
	80	1	80	800	5000	5000	5000	5000	5000	5000	5000	5000	5000	5000	5000	5000	5000

		Upstream device																					
Series		OptiMat D630 N/H (40/65 kA at Ue = 400 V)																					
OptiMat D250-TM080	In, A				250	270	290	310	330	350	370	390	410	430	450	470	490	510	530	550	570	590	610	630
		Setpoint	Ir, A	Isd, A	2500	2700	2900	3100	3300	3500	3700	3900	4100	4300	4500	4700	4900	5100	5300	5500	5700	5900	6100	6300
	80	0,7	56	800	7000	7000	7000	7000	7000	7000	7000	7000	7000	7000	7000	7000	7000	7000	7000	7000	7000	7000	7000	7000
	80	0,8	64	800	7000	7000	7000	7000	7000	7000	7000	7000	7000	7000	7000	7000	7000	7000	7000	7000	7000	7000	7000	7000
	80	0,9	72	800	7000	7000	7000	7000	7000	7000	7000	7000	7000	7000	7000	7000	7000	7000	7000	7000	7000	7000	7000	7000
	80	1	80	800	7000	7000	7000	7000	7000	7000	7000	7000	7000	7000	7000	7000	7000	7000	7000	7000	7000	7000	7000	7000

		Upstream device															
Series		OptiMat D800 N/H (50/85 kA at Ue = 400 V)															
OptiMat D250-TM080	In, A				320	360	400	440	480	520	560	600	640	680	720	760	800
		Setpoint	Ir, A	Isd, A	3200	3600	4000	4400	4800	5200	5600	6000	6400	6800	7200	7600	8000
	80	0,7	56	800	9600	9600	9600	9600	9600	9600	9600	9600	9600	9600	9600	9600	9600
	80	0,8	64	800	9600	9600	9600	9600	9600	9600	9600	9600	9600	9600	9600	9600	9600
	80	0,9	72	800	9600	9600	9600	9600	9600	9600	9600	9600	9600	9600	9600	9600	9600
	80	1	80	800	9600	9600	9600	9600	9600	9600	9600	9600	9600	9600	9600	9600	9600

		Upstream device															
Series		OptiMat D1000 N/H (50/85 kA at Ue = 400 V)															
OptiMat D250-TM080	In, A				400	450	500	550	600	650	700	750	800	850	900	950	1000
		Setpoint	Ir, A	Isd, A	4000	4500	5000	5500	6000	6500	7000	7500	8000	8500	9000	9500	10000
	80	0,7	56	800	12000	12000	12000	12000	12000	12000	12000	12000	12000	12000	12000	12000	12000
	80	0,8	64	800	12000	12000	12000	12000	12000	12000	12000	12000	12000	12000	12000	12000	12000
	80	0,9	72	800	12000	12000	12000	12000	12000	12000	12000	12000	12000	12000	12000	12000	12000
	80	1	80	800	12000	12000	12000	12000	12000	12000	12000	12000	12000	12000	12000	12000	12000

		Upstream device																			
Series		OptiMat D1250 N/H (50/85 kA at Ue = 400 V)																			
OptiMat D250-TM080	In, A				500	550	600	650	700	750	800	850	900	950	1000	1050	1100	1150	1200	1250
		Setpoint	Ir, A	Isd, A	5000	5500	6000	6500	7000	7500	8000	8500	9000	9500	10000	10500	11000	11500	12000	12500
	80	0,7	56	800	15000	15000	15000	15000	15000	15000	15000	15000	15000	15000	15000	15000	15000	15000	15000	15000
	80	0,8	64	800	15000	15000	15000	15000	15000	15000	15000	15000	15000	15000	15000	15000	15000	15000	15000	15000
	80	0,9	72	800	15000	15000	15000	15000	15000	15000	15000	15000	15000	15000	15000	15000	15000	15000	15000	15000
	80	1	80	800	15000	15000	15000	15000	15000	15000	15000	15000	15000	15000	15000	15000	15000	15000	15000	15000

		Upstream device																			
Series		OptiMat D1600 N/H (50/85 kA at Ue = 400 V)																			
OptiMat D250-TM080	In, A				640	700	760	820	880	940	1000	1060	1120	1180	1240	1300	1360	1420	1480	1540	1600
		Setpoint	Ir, A	Isd, A	6400	7000	7600	8200	8800	9400	10000	10600	11200	11800	12400	13000	13600	14200	14800	15400	16000
	80	0,7	56	800	19200	19200	19200	19200	19200	19200	19200	19200	19200	19200	19200	19200	19200	19200	19200	19200	19200
	80	0,8	64	800	19200	19200	19200	19200	19200	19200	19200	19200	19200	19200	19200	19200	19200	19200	19200	19200	19200
	80	0,9	72	800	19200	19200	19200	19200	19200	19200	19200	19200	19200	19200	19200	19200	19200	19200	19200	19200	19200
	80	1	80	800	19200	19200	19200	19200	19200	19200	19200	19200	19200	19200	19200	19200	19200	19200	19200	19200	19200

		Upstream device												
Series		OptiMat D100 N/H (40/65 kA at Ue = 400 V)												
OptiMat D250-TM100	In, A				40	45	50	56	63	70	80	90	95	100
		Setpoint	Ir, A	Isd, A	400	450	500	560	630	700	800	900	950	1000
	100	0,7	70	1000										
	100	0,8	80	1000										
	100	0,9	90	1000										
	100	1	100	1000										

		Upstream device												
Series		OptiMat D160 N/H (40/65 kA at Ue = 400 V)												
OptiMat D250-TM100	In, A				64	72	80	89,6	100,8	112	128	144	152	160
		Setpoint	Ir, A	Isd, A	640	720	800	896	1008	1120	1280	1440	1520	1600
	100	0,7	70	1000									2000	2000
	100	0,8	80	1000									2000	2000
	100	0,9	90	1000									2000	2000
	100	1	100	1000										2000

		Upstream device												
Series		OptiMat D250 N/H (40/65 kA at Ue = 400 V)												
OptiMat D250-TM100	In, A				100	112,5	125	140	157,5	175	200	225	237,5	250
		Setpoint	Ir, A	Isd, A	1000	1125	1250	1400	1575	1750	2000	2250	2375	2500
	100	0,7	70	1000					3000	3000	3000	3000	3000	3000
	100	0,8	80	1000					3000	3000	3000	3000	3000	3000
	100	0,9	90	1000					3000	3000	3000	3000	3000	3000
	100	1	100	1000						3000	3000	3000	3000	3000

		Upstream device															
Series		OptiMat D400 N/H (40/65 kA at Ue = 400 V)															
OptiMat D250-TM100	In, A				160	180	200	220	240	260	280	300	320	340	360	380	400
		Setpoint	Ir, A	Isd, A	1600	1800	2000	2200	2400	2600	2800	3000	3200	3400	3600	3800	4000
	100	0,7	70	1000	5000	5000	5000	5000	5000	5000	5000	5000	5000	5000	5000	5000	5000
	100	0,8	80	1000	5000	5000	5000	5000	5000	5000	5000	5000	5000	5000	5000	5000	5000
	100	0,9	90	1000	5000	5000	5000	5000	5000	5000	5000	5000	5000	5000	5000	5000	5000
	100	1	100	1000	5000	5000	5000	5000	5000	5000	5000	5000	5000	5000	5000	5000	5000

		Upstream device																						
Series		OptiMat D630 N/H (40/65 kA at Ue = 400 V)																						
OptiMat D250-TM100	In, A				250	270	290	310	330	350	370	390	410	430	450	470	490	510	530	550	570	590	610	630
		Setpoint	Ir, A	Isd, A	2500	2700	2900	3100	3300	3500	3700	3900	4100	4300	4500	4700	4900	5100	5300	5500	5700	5900	6100	6300
	100	0,7	70	1000	7000	7000	7000	7000	7000	7000	7000	7000	7000	7000	7000	7000	7000	7000	7000	7000	7000	7000	7000	7000
	100	0,8	80	1000	7000	7000	7000	7000	7000	7000	7000	7000	7000	7000	7000	7000	7000	7000	7000	7000	7000	7000	7000	7000
	100	0,9	90	1000	7000	7000	7000	7000	7000	7000	7000	7000	7000	7000	7000	7000	7000	7000	7000	7000	7000	7000	7000	7000
	100	1	100	1000	7000	7000	7000	7000	7000	7000	7000	7000	7000	7000	7000	7000	7000	7000	7000	7000	7000	7000	7000	7000

		Upstream device															
Series		OptiMat D800 N/H (50/85 kA at Ue = 400 V)															
OptiMat D250-TM100	In, A				320	360	400	440	480	520	560	600	640	680	720	760	800
		Setpoint	Ir, A	Isd, A	3200	3600	4000	4400	4800	5200	5600	6000	6400	6800	7200	7600	8000
	100	0,7	70	1000	9600	9600	9600	9600	9600	9600	9600	9600	9600	9600	9600	9600	9600
	100	0,8	80	1000	9600	9600	9600	9600	9600	9600	9600	9600	9600	9600	9600	9600	9600
	100	0,9	90	1000	9600	9600	9600	9600	9600	9600	9600	9600	9600	9600	9600	9600	9600
	100	1	100	1000	9600	9600	9600	9600	9600	9600	9600	9600	9600	9600	9600	9600	9600

		Upstream device															
Series		OptiMat D1000 N/H (50/85 kA at Ue = 400 V)															
OptiMat D250-TM100	In, A				400	450	500	550	600	650	700	750	800	850	900	950	1000
		Setpoint	Ir, A	Isd, A	4000	4500	5000	5500	6000	6500	7000	7500	8000	8500	9000	9500	10000
	100	0,7	70	1000	12000	12000	12000	12000	12000	12000	12000	12000	12000	12000	12000	12000	12000
	100	0,8	80	1000	12000	12000	12000	12000	12000	12000	12000	12000	12000	12000	12000	12000	12000
	100	0,9	90	1000	12000	12000	12000	12000	12000	12000	12000	12000	12000	12000	12000	12000	12000
	100	1	100	1000	12000	12000	12000	12000	12000	12000	12000	12000	12000	12000	12000	12000	12000

		Upstream device																			
Series		OptiMat D1250 N/H (50/85 kA at Ue = 400 V)																			
OptiMat D250-TM100	In, A				500	550	600	650	700	750	800	850	900	950	1000	1050	1100	1150	1200	1250
		Setpoint	Ir, A	Isd, A	5000	5500	6000	6500	7000	7500	8000	8500	9000	9500	10000	10500	11000	11500	12000	12500
	100	0,7	70	1000	15000	15000	15000	15000	15000	15000	15000	15000	15000	15000	15000	15000	15000	15000	15000	15000
	100	0,8	80	1000	15000	15000	15000	15000	15000	15000	15000	15000	15000	15000	15000	15000	15000	15000	15000	15000
	100	0,9	90	1000	15000	15000	15000	15000	15000	15000	15000	15000	15000	15000	15000	15000	15000	15000	15000	15000
	100	1	100	1000	15000	15000	15000	15000	15000	15000	15000	15000	15000	15000	15000	15000	15000	15000	15000	15000

		Upstream device																			
Series		OptiMat D1600 N/H (50/85 kA at Ue = 400 V)																			
OptiMat D250-TM100	In, A				640	700	760	820	880	940	1000	1060	1120	1180	1240	1300	1360	1420	1480	1540	1600
		Setpoint	Ir, A	Isd, A	6400	7000	7600	8200	8800	9400	10000	10600	11200	11800	12400	13000	13600	14200	14800	15400	16000
	100	0,7	70	1000	19200	19200	19200	19200	19200	19200	19200	19200	19200	19200	19200	19200	19200	19200	19200	19200	19200
	100	0,8	80	1000	19200	19200	19200	19200	19200	19200	19200	19200	19200	19200	19200	19200	19200	19200	19200	19200	19200
	100	0,9	90	1000	19200	19200	19200	19200	19200	19200	19200	19200	19200	19200	19200	19200	19200	19200	19200	19200	19200
	100	1	100	1000	19200	19200	19200	19200	19200	19200	19200	19200	19200	19200	19200	19200	19200	19200	19200	19200	19200

		Upstream device												
Series		OptiMat D100 N/H (40/65 kA at Ue = 400 V)												
OptiMat D250-TM125	In, A				40	45	50	56	63	70	80	90	95	100
		Setpoint	Ir, A	Isd, A	400	450	500	560	630	700	800	900	950	1000
	125	0,7	87,5	1250										
	125	0,8	100	1250										
	125	0,9	112,5	1250										
	125	1	125	1250										

		Upstream device												
Series		OptiMat D160 N/H (40/65 kA at Ue = 400 V)												
OptiMat D250-TM125	In, A				64	72	80	89,6	100,8	112	128	144	152	160
		Setpoint	Ir, A	Isd, A	640	720	800	896	1008	1120	1280	1440	1520	1600
	125	0,7	87,5	1250										
	125	0,8	100	1250										
	125	0,9	112,5	1250										
	125	1	125	1250										

		Upstream device												
Series		OptiMat D250 N/H (40/65 kA at Ue = 400 V)												
OptiMat D250-TM125	In, A				100	112,5	125	140	157,5	175	200	225	237,5	250
		Setpoint	Ir, A	Isd, A	1000	1125	1250	1400	1575	1750	2000	2250	2375	2500
	125	0,7	87,5	1250							3000	3000	3000	3000
	125	0,8	100	1250							3000	3000	3000	3000
	125	0,9	112,5	1250							3000	3000	3000	3000
	125	1	125	1250							3000	3000	3000	3000

		Upstream device															
Series		OptiMat D400 N/H (40/65 kA at Ue = 400 V)															
OptiMat D250-TM125	In, A				160	180	200	220	240	260	280	300	320	340	360	380	400
		Setpoint	Ir, A	Isd, A	1600	1800	2000	2200	2400	2600	2800	3000	3200	3400	3600	3800	4000
	125	0,7	87,5	1250			5000	5000	5000	5000	5000	5000	5000	5000	5000	5000	5000
	125	0,8	100	1250			5000	5000	5000	5000	5000	5000	5000	5000	5000	5000	5000
	125	0,9	112,5	1250			5000	5000	5000	5000	5000	5000	5000	5000	5000	5000	5000
	125	1	125	1250			5000	5000	5000	5000	5000	5000	5000	5000	5000	5000	5000

		Upstream device																					
Series		OptiMat D630 N/H (40/65 kA at Ue = 400 V)																					
OptiMat D250-TM125	In, A				250	270	290	310	330	350	370	390	410	430	450	470	490	510	530	550	570	590	610	630
		Setpoint	Ir, A	Isd, A	2500	2700	2900	3100	3300	3500	3700	3900	4100	4300	4500	4700	4900	5100	5300	5500	5700	5900	6100	6300
	125	0,7	87,5	1250	7000	7000	7000	7000	7000	7000	7000	7000	7000	7000	7000	7000	7000	7000	7000	7000	7000	7000	7000	7000
	125	0,8	100	1250	7000	7000	7000	7000	7000	7000	7000	7000	7000	7000	7000	7000	7000	7000	7000	7000	7000	7000	7000	7000
	125	0,9	112,5	1250	7000	7000	7000	7000	7000	7000	7000	7000	7000	7000	7000	7000	7000	7000	7000	7000	7000	7000	7000	7000
	125	1	125	1250	7000	7000	7000	7000	7000	7000	7000	7000	7000	7000	7000	7000	7000	7000	7000	7000	7000	7000	7000	7000

		Upstream device															
Series		OptiMat D800 N/H (50/85 kA at Ue = 400 V)															
OptiMat D250-TM125	In, A				320	360	400	440	480	520	560	600	640	680	720	760	800
		Setpoint	Ir, A	Isd, A	3200	3600	4000	4400	4800	5200	5600	6000	6400	6800	7200	7600	8000
	125	0,7	87,5	1250	9600	9600	9600	9600	9600	9600	9600	9600	9600	9600	9600	9600	9600
	125	0,8	100	1250	9600	9600	9600	9600	9600	9600	9600	9600	9600	9600	9600	9600	9600
	125	0,9	112,5	1250	9600	9600	9600	9600	9600	9600	9600	9600	9600	9600	9600	9600	9600
	125	1	125	1250	9600	9600	9600	9600	9600	9600	9600	9600	9600	9600	9600	9600	9600

		Upstream device															
Series		OptiMat D1000 N/H (50/85 kA at Ue = 400 V)															
OptiMat D250-TM125	In, A				400	450	500	550	600	650	700	750	800	850	900	950	1000
		Setpoint	Ir, A	Isd, A	4000	4500	5000	5500	6000	6500	7000	7500	8000	8500	9000	9500	10000
	125	0,7	87,5	1250	12000	12000	12000	12000	12000	12000	12000	12000	12000	12000	12000	12000	12000
	125	0,8	100	1250	12000	12000	12000	12000	12000	12000	12000	12000	12000	12000	12000	12000	12000
	125	0,9	112,5	1250	12000	12000	12000	12000	12000	12000	12000	12000	12000	12000	12000	12000	12000
	125	1	125	1250	12000	12000	12000	12000	12000	12000	12000	12000	12000	12000	12000	12000	12000

		Upstream device																					
Series		OptiMat D1250 N/H (50/85 kA at Ue = 400 V)																					
OptiMat D250-TM125	In, A				500	550	600	650	700	750	800	850	900	950	1000	1050	1100	1150	1200	1250			
		Setpoint	Ir, A	Isd, A	5000	5500	6000	6500	7000	7500	8000	8500	9000	9500	10000	10500	11000	11500	12000	12500			
	125	0,7	87,5	1250	15000	15000	15000	15000	15000	15000	15000	15000	15000	15000	15000	15000	15000	15000	15000	15000			
	125	0,8	100	1250	15000	15000	15000	15000	15000	15000	15000	15000	15000	15000	15000	15000	15000	15000	15000	15000			
	125	0,9	112,5	1250	15000	15000	15000	15000	15000	15000	15000	15000	15000	15000	15000	15000	15000	15000	15000	15000			
	125	1	125	1250	15000	15000	15000	15000	15000	15000	15000	15000	15000	15000	15000	15000	15000	15000	15000	15000			

		Upstream device																					
Series		OptiMat D1600 N/H (50/85 kA at Ue = 400 V)																					
OptiMat D250-TM125	In, A				640	700	760	820	880	940	1000	1060	1120	1180	1240	1300	1360	1420	1480	1540	1600		
		Setpoint	Ir, A	Isd, A	6400	7000	7600	8200	8800	9400	10000	10600	11200	11800	12400	13000	13600	14200	14800	15400	16000		
	125	0,7	87,5	1250	19200	19200	19200	19200	19200	19200	19200	19200	19200	19200	19200	19200	19200	19200	19200	19200	19200		
	125	0,8	100	1250	19200	19200	19200	19200	19200	19200	19200	19200	19200	19200	19200	19200	19200	19200	19200	19200	19200		
	125	0,9	112,5	1250	19200	19200	19200	19200	19200	19200	19200	19200	19200	19200	19200	19200	19200	19200	19200	19200	19200		
	125	1	125	1250	19200	19200	19200	19200	19200	19200	19200	19200	19200	19200	19200	19200	19200	19200	19200	19200	19200		

Series		Upstream device			OptiMat D100 N/H (40/65 kA at Ue = 400 V)									
OptiMat D250-TM160	In, A				40	45	50	56	63	70	80	90	95	100
		Setpoint	Ir, A	Isd, A	400	450	500	560	630	700	800	900	950	1000
	160	0,7	112	1600										
	160	0,8	128	1600										
	160	0,9	144	1600										
	160	1	160	1600										

Series		Upstream device			OptiMat D160 N/H (40/65 kA at Ue = 400 V)									
OptiMat D250-TM160	In, A				64	72	80	89,6	100,8	112	128	144	152	160
		Setpoint	Ir, A	Isd, A	640	720	800	896	1008	1120	1280	1440	1520	1600
	160	0,7	112	1600										
	160	0,8	128	1600										
	160	0,9	144	1600										
	160	1	160	1600										

Series		Upstream device			OptiMat D250 N/H (40/65 kA at Ue = 400 V)									
OptiMat D250-TM160	In, A				100	112,5	125	140	157,5	175	200	225	237,5	250
		Setpoint	Ir, A	Isd, A	1000	1125	1250	1400	1575	1750	2000	2250	2375	2500
	160	0,7	112	1600										3000
	160	0,8	128	1600										3000
	160	0,9	144	1600										3000
	160	1	160	1600										

Series		Upstream device			OptiMat D400 N/H (40/65 kA at Ue = 400 V)												
OptiMat D250-TM160	In, A				160	180	200	220	240	260	280	300	320	340	360	380	400
		Setpoint	Ir, A	Isd, A	1600	1800	2000	2200	2400	2600	2800	3000	3200	3400	3600	3800	4000
	160	0,7	112	1600					5000	5000	5000	5000	5000	5000	5000	5000	5000
	160	0,8	128	1600					5000	5000	5000	5000	5000	5000	5000	5000	5000
	160	0,9	144	1600					5000	5000	5000	5000	5000	5000	5000	5000	5000
	160	1	160	1600						5000	5000	5000	5000	5000	5000	5000	5000

Series		Upstream device			OptiMat D630 N/H (40/65 kA at Ue = 400 V)																			
OptiMat D250-TM160	In, A				250	270	290	310	330	350	370	390	410	430	450	470	490	510	530	550	570	590	610	630
		Setpoint	Ir, A	Isd, A	2500	2700	2900	3100	3300	3500	3700	3900	4100	4300	4500	4700	4900	5100	5300	5500	5700	5900	6100	6300
	160	0,7	112	1600	7000	7000	7000	7000	7000	7000	7000	7000	7000	7000	7000	7000	7000	7000	7000	7000	7000	7000	7000	7000
	160	0,8	128	1600	7000	7000	7000	7000	7000	7000	7000	7000	7000	7000	7000	7000	7000	7000	7000	7000	7000	7000	7000	7000
	160	0,9	144	1600	7000	7000	7000	7000	7000	7000	7000	7000	7000	7000	7000	7000	7000	7000	7000	7000	7000	7000	7000	7000
	160	1	160	1600		7000	7000	7000	7000	7000	7000	7000	7000	7000	7000	7000	7000	7000	7000	7000	7000	7000	7000	7000

Series		Upstream device			OptiMat D800 N/H (50/85 kA at Ue = 400 V)												
OptiMat D250-TM160	In, A				320	360	400	440	480	520	560	600	640	680	720	760	800
		Setpoint	Ir, A	Isd, A	3200	3600	4000	4400	4800	5200	5600	6000	6400	6800	7200	7600	8000
	160	0,7	112	1600	9600	9600	9600	9600	9600	9600	9600	9600	9600	9600	9600	9600	9600
	160	0,8	128	1600	9600	9600	9600	9600	9600	9600	9600	9600	9600	9600	9600	9600	9600
	160	0,9	144	1600	9600	9600	9600	9600	9600	9600	9600	9600	9600	9600	9600	9600	9600
	160	1	160	1600	9600	9600	9600	9600	9600	9600	9600	9600	9600	9600	9600	9600	9600

		Upstream device															
Series		OptiMat D1000 N/H (50/85 kA at Ue = 400 V)															
OptiMat D250-TM160	In, A				400	450	500	550	600	650	700	750	800	850	900	950	1000
		Setpoint	Ir, A	Isd, A	4000	4500	5000	5500	6000	6500	7000	7500	8000	8500	9000	9500	10000
	160	0,7	112	1600	12000	12000	12000	12000	12000	12000	12000	12000	12000	12000	12000	12000	12000
	160	0,8	128	1600	12000	12000	12000	12000	12000	12000	12000	12000	12000	12000	12000	12000	12000
	160	0,9	144	1600	12000	12000	12000	12000	12000	12000	12000	12000	12000	12000	12000	12000	12000
	160	1	160	1600	12000	12000	12000	12000	12000	12000	12000	12000	12000	12000	12000	12000	12000

		Upstream device																			
Series		OptiMat D1250 N/H (50/85 kA at Ue = 400 V)																			
OptiMat D250-TM160	In, A				500	550	600	650	700	750	800	850	900	950	1000	1050	1100	1150	1200	1250
		Setpoint	Ir, A	Isd, A	5000	5500	6000	6500	7000	7500	8000	8500	9000	9500	10000	10500	11000	11500	12000	12500
	160	0,7	112	1600	15000	15000	15000	15000	15000	15000	15000	15000	15000	15000	15000	15000	15000	15000	15000	15000
	160	0,8	128	1600	15000	15000	15000	15000	15000	15000	15000	15000	15000	15000	15000	15000	15000	15000	15000	15000
	160	0,9	144	1600	15000	15000	15000	15000	15000	15000	15000	15000	15000	15000	15000	15000	15000	15000	15000	15000
	160	1	160	1600	15000	15000	15000	15000	15000	15000	15000	15000	15000	15000	15000	15000	15000	15000	15000	15000

		Upstream device																			
Series		OptiMat D1600 N/H (50/85 kA at Ue = 400 V)																			
OptiMat D250-TM160	In, A				640	700	760	820	880	940	1000	1060	1120	1180	1240	1300	1360	1420	1480	1540	1600
		Setpoint	Ir, A	Isd, A	6400	7000	7600	8200	8800	9400	10000	10600	11200	11800	12400	13000	13600	14200	14800	15400	16000
	160	0,7	112	1600	19200	19200	19200	19200	19200	19200	19200	19200	19200	19200	19200	19200	19200	19200	19200	19200	19200
	160	0,8	128	1600	19200	19200	19200	19200	19200	19200	19200	19200	19200	19200	19200	19200	19200	19200	19200	19200	19200
	160	0,9	144	1600	19200	19200	19200	19200	19200	19200	19200	19200	19200	19200	19200	19200	19200	19200	19200	19200	19200
	160	1	160	1600	19200	19200	19200	19200	19200	19200	19200	19200	19200	19200	19200	19200	19200	19200	19200	19200	19200

		Upstream device												
Series		OptiMat D100 N/H (40/65 kA at Ue = 400 V)												
OptiMat D250-TM200	In, A				40	45	50	56	63	70	80	90	95	100
		Setpoint	Ir, A	Isd, A	400	450	500	560	630	700	800	900	950	1000
	200	0,7	140	2000										
	200	0,8	160	2000										
	200	0,9	180	2000										
	200	1	200	2000										

		Upstream device												
Series		OptiMat D160 N/H (40/65 kA at Ue = 400 V)												
OptiMat D250-TM200	In, A				64	72	80	89,6	100,8	112	128	144	152	160
		Setpoint	Ir, A	Isd, A	640	720	800	896	1008	1120	1280	1440	1520	1600
	200	0,7	140	2000										
	200	0,8	160	2000										
	200	0,9	180	2000										
	200	1	200	2000										

		Upstream device												
Series		OptiMat D250 N/H (40/65 kA at Ue = 400 V)												
OptiMat D250-TM200	In, A				100	112,5	125	140	157,5	175	200	225	237,5	250
		Setpoint	Ir, A	Isd, A	1000	1125	1250	1400	1575	1750	2000	2250	2375	2500
	200	0,7	140	2000										
	200	0,8	160	2000										
	200	0,9	180	2000										
	200	1	200	2000										

		Upstream device															
Series		OptiMat D400 N/H (40/65 kA at Ue = 400 V)															
OptiMat D250-TM200	In, A				160	180	200	220	240	260	280	300	320	340	360	380	400
		Setpoint	Ir, A	Isd, A	1600	1800	2000	2200	2400	2600	2800	3000	3200	3400	3600	3800	4000
	200	0,7	140	2000								5000	5000	5000	5000	5000	5000
	200	0,8	160	2000								5000	5000	5000	5000	5000	5000
	200	0,9	180	2000								5000	5000	5000	5000	5000	5000
	200	1	200	2000									5000	5000	5000	5000	5000

		Upstream device																					
Series		OptiMat D630 N/H (40/65 kA at Ue = 400 V)																					
OptiMat D250-TM200	In, A				250	270	290	310	330	350	370	390	410	430	450	470	490	510	530	550	570	590	610	630
		Setpoint	Ir, A	Isd, A	2500	2700	2900	3100	3300	3500	3700	3900	4100	4300	4500	4700	4900	5100	5300	5500	5700	5900	6100	6300
	200	0,7	140	2000				7000	7000	7000	7000	7000	7000	7000	7000	7000	7000	7000	7000	7000	7000	7000	7000	7000
	200	0,8	160	2000				7000	7000	7000	7000	7000	7000	7000	7000	7000	7000	7000	7000	7000	7000	7000	7000	7000
	200	0,9	180	2000				7000	7000	7000	7000	7000	7000	7000	7000	7000	7000	7000	7000	7000	7000	7000	7000	7000
	200	1	200	2000					7000	7000	7000	7000	7000	7000	7000	7000	7000	7000	7000	7000	7000	7000	7000	7000

		Upstream device															
Series		OptiMat D800 N/H (50/85 kA at Ue = 400 V)															
OptiMat D250-TM200	In, A				320	360	400	440	480	520	560	600	640	680	720	760	800
		Setpoint	Ir, A	Isd, A	3200	3600	4000	4400	4800	5200	5600	6000	6400	6800	7200	7600	8000
	200	0,7	140	2000	9600	9600	9600	9600	9600	9600	9600	9600	9600	9600	9600	9600	9600
	200	0,8	160	2000	9600	9600	9600	9600	9600	9600	9600	9600	9600	9600	9600	9600	9600
	200	0,9	180	2000	9600	9600	9600	9600	9600	9600	9600	9600	9600	9600	9600	9600	9600
	200	1	200	2000	9600	9600	9600	9600	9600	9600	9600	9600	9600	9600	9600	9600	9600

		Upstream device															
Series		OptiMat D1000 N/H (50/85 kA at Ue = 400 V)															
OptiMat D250-TM200	In, A				400	450	500	550	600	650	700	750	800	850	900	950	1000
		Setpoint	Ir, A	Isd, A	4000	4500	5000	5500	6000	6500	7000	7500	8000	8500	9000	9500	10000
	200	0,7	140	2000	12000	12000	12000	12000	12000	12000	12000	12000	12000	12000	12000	12000	12000
	200	0,8	160	2000	12000	12000	12000	12000	12000	12000	12000	12000	12000	12000	12000	12000	12000
	200	0,9	180	2000	12000	12000	12000	12000	12000	12000	12000	12000	12000	12000	12000	12000	12000
	200	1	200	2000	12000	12000	12000	12000	12000	12000	12000	12000	12000	12000	12000	12000	12000

		Upstream device																			
Series		OptiMat D1250 N/H (50/85 kA at Ue = 400 V)																			
OptiMat D250-TM200	In, A				500	550	600	650	700	750	800	850	900	950	1000	1050	1100	1150	1200	1250
		Setpoint	Ir, A	Isd, A	5000	5500	6000	6500	7000	7500	8000	8500	9000	9500	10000	10500	11000	11500	12000	12500
	200	0,7	140	2000	15000	15000	15000	15000	15000	15000	15000	15000	15000	15000	15000	15000	15000	15000	15000	15000
	200	0,8	160	2000	15000	15000	15000	15000	15000	15000	15000	15000	15000	15000	15000	15000	15000	15000	15000	15000
	200	0,9	180	2000	15000	15000	15000	15000	15000	15000	15000	15000	15000	15000	15000	15000	15000	15000	15000	15000
	200	1	200	2000	15000	15000	15000	15000	15000	15000	15000	15000	15000	15000	15000	15000	15000	15000	15000	15000

		Upstream device																			
Series		OptiMat D1600 N/H (50/85 kA at Ue = 400 V)																			
OptiMat D250-TM200	In, A				640	700	760	820	880	940	1000	1060	1120	1180	1240	1300	1360	1420	1480	1540	1600
		Setpoint	Ir, A	Isd, A	6400	7000	7600	8200	8800	9400	10000	10600	11200	11800	12400	13000	13600	14200	14800	15400	16000
	200	0,7	140	2000	19200	19200	19200	19200	19200	19200	19200	19200	19200	19200	19200	19200	19200	19200	19200	19200	19200
	200	0,8	160	2000	19200	19200	19200	19200	19200	19200	19200	19200	19200	19200	19200	19200	19200	19200	19200	19200	19200
	200	0,9	180	2000	19200	19200	19200	19200	19200	19200	19200	19200	19200	19200	19200	19200	19200	19200	19200	19200	19200
	200	1	200	2000	19200	19200	19200	19200	19200	19200	19200	19200	19200	19200	19200	19200	19200	19200	19200	19200	19200

		Upstream device												
Series		OptiMat D100 N/H (40/65 kA at Ue = 400 V)												
OptiMat D250-TM250	In, A				40	45	50	56	63	70	80	90	95	100
		Setpoint	Ir, A	Isd, A	400	450	500	560	630	700	800	900	950	1000
	250	0,7	175	2500										
	250	0,8	200	2500										
	250	0,9	225	2500										
	250	1	250	2500										

		Upstream device												
Series		OptiMat D160 N/H (40/65 kA at Ue = 400 V)												
OptiMat D250-TM250	In, A				64	72	80	89,6	100,8	112	128	144	152	160
		Setpoint	Ir, A	Isd, A	640	720	800	896	1008	1120	1280	1440	1520	1600
	250	0,7	175	2500										
	250	0,8	200	2500										
	250	0,9	225	2500										
	250	1	250	2500										

		Upstream device												
Series		OptiMat D250 N/H (40/65 kA at Ue = 400 V)												
OptiMat D250-TM250	In, A				100	112,5	125	140	157,5	175	200	225	237,5	250
		Setpoint	Ir, A	Isd, A	1000	1125	1250	1400	1575	1750	2000	2250	2375	2500
	250	0,7	175	2500										
	250	0,8	200	2500										
	250	0,9	225	2500										
	250	1	250	2500										

		Upstream device															
Series		OptiMat D400 N/H (40/65 kA at Ue = 400 V)															
OptiMat D250-TM250	In, A				160	180	200	220	240	260	280	300	320	340	360	380	400
		Setpoint	Ir, A	Isd, A	1600	1800	2000	2200	2400	2600	2800	3000	3200	3400	3600	3800	4000
	250	0,7	175	2500												5000	5000
	250	0,8	200	2500												5000	5000
	250	0,9	225	2500												5000	5000
	250	1	250	2500													5000

		Upstream device																					
Series		OptiMat D630 N/H (40/65 kA at Ue = 400 V)																					
OptiMat D250-TM250	In, A				250	270	290	310	330	350	370	390	410	430	450	470	490	510	530	550	570	590	610	630
		Setpoint	Ir, A	Isd, A	2500	2700	2900	3100	3300	3500	3700	3900	4100	4300	4500	4700	4900	5100	5300	5500	5700	5900	6100	6300
	250	0,7	175	2500								7000	7000	7000	7000	7000	7000	7000	7000	7000	7000	7000	7000	7000
	250	0,8	200	2500								7000	7000	7000	7000	7000	7000	7000	7000	7000	7000	7000	7000	7000
	250	0,9	225	2500								7000	7000	7000	7000	7000	7000	7000	7000	7000	7000	7000	7000	7000
	250	1	250	2500									7000	7000	7000	7000	7000	7000	7000	7000	7000	7000	7000	7000

		Upstream device															
Series		OptiMat D800 N/H (50/85 kA at Ue = 400 V)															
OptiMat D250-TM250	In, A				320	360	400	440	480	520	560	600	640	680	720	760	800
		Setpoint	Ir, A	Isd, A	3200	3600	4000	4400	4800	5200	5600	6000	6400	6800	7200	7600	8000
	250	0,7	175	2500			9600	9600	9600	9600	9600	9600	9600	9600	9600	9600	9600
	250	0,8	200	2500			9600	9600	9600	9600	9600	9600	9600	9600	9600	9600	9600
	250	0,9	225	2500			9600	9600	9600	9600	9600	9600	9600	9600	9600	9600	9600
	250	1	250	2500			9600	9600	9600	9600	9600	9600	9600	9600	9600	9600	9600

		Upstream device															
Series		OptiMat D1000 N/H (50/85 kA at Ue = 400 V)															
OptiMat D250-TM250	In, A				400	450	500	550	600	650	700	750	800	850	900	950	1000
		Setpoint	Ir, A	Isd, A	4000	4500	5000	5500	6000	6500	7000	7500	8000	8500	9000	9500	10000
	250	0,7	175	2500	12000	12000	12000	12000	12000	12000	12000	12000	12000	12000	12000	12000	12000
	250	0,8	200	2500	12000	12000	12000	12000	12000	12000	12000	12000	12000	12000	12000	12000	12000
	250	0,9	225	2500	12000	12000	12000	12000	12000	12000	12000	12000	12000	12000	12000	12000	12000
	250	1	250	2500	12000	12000	12000	12000	12000	12000	12000	12000	12000	12000	12000	12000	12000

		Upstream device																			
Series		OptiMat D1250 N/H (50/85 kA at Ue = 400 V)																			
OptiMat D250-TM250	In, A				500	550	600	650	700	750	800	850	900	950	1000	1050	1100	1150	1200	1250
		Setpoint	Ir, A	Isd, A	5000	5500	6000	6500	7000	7500	8000	8500	9000	9500	10000	10500	11000	11500	12000	12500
	250	0,7	175	2500	15000	15000	15000	15000	15000	15000	15000	15000	15000	15000	15000	15000	15000	15000	15000	15000
	250	0,8	200	2500	15000	15000	15000	15000	15000	15000	15000	15000	15000	15000	15000	15000	15000	15000	15000	15000
	250	0,9	225	2500	15000	15000	15000	15000	15000	15000	15000	15000	15000	15000	15000	15000	15000	15000	15000	15000
	250	1	250	2500	15000	15000	15000	15000	15000	15000	15000	15000	15000	15000	15000	15000	15000	15000	15000	15000

		Upstream device																			
Series		OptiMat D1600 N/H (50/85 kA at Ue = 400 V)																			
OptiMat D250-TM250	In, A				640	700	760	820	880	940	1000	1060	1120	1180	1240	1300	1360	1420	1480	1540	1600
		Setpoint	Ir, A	Isd, A	6400	7000	7600	8200	8800	9400	10000	10600	11200	11800	12400	13000	13600	14200	14800	15400	16000
	250	0,7	175	2500	19200	19200	19200	19200	19200	19200	19200	19200	19200	19200	19200	19200	19200	19200	19200	19200	19200
	250	0,8	200	2500	19200	19200	19200	19200	19200	19200	19200	19200	19200	19200	19200	19200	19200	19200	19200	19200	19200
	250	0,9	225	2500	19200	19200	19200	19200	19200	19200	19200	19200	19200	19200	19200	19200	19200	19200	19200	19200	19200
	250	1	250	2500	19200	19200	19200	19200	19200	19200	19200	19200	19200	19200	19200	19200	19200	19200	19200	19200	19200

		Upstream device												
Series		OptiMat D100 N/H (40/65 kA at Ue = 400 V)												
OptiMat D630-TM320	In, A				40	45	50	56	63	70	80	90	95	100
		Setpoint	Ir, A	Isd, A	400	450	500	560	630	700	800	900	950	1000
	320	0,7	175	3200										
	320	0,8	200	3200										
	320	0,9	225	3200										
	320	1	250	3200										

		Upstream device												
Series		OptiMat D160 N/H (40/65 kA at Ue = 400 V)												
OptiMat D630-TM320	In, A				64	72	80	89,6	100,8	112	128	144	152	160
		Setpoint	Ir, A	Isd, A	640	720	800	896	1008	1120	1280	1440	1520	1600
	320	0,7	175	3200										
	320	0,8	200	3200										
	320	0,9	225	3200										
	320	1	250	3200										

		Upstream device												
Series		OptiMat D250 N/H (40/65 kA at Ue = 400 V)												
OptiMat D630-TM320	In, A				100	112,5	125	140	157,5	175	200	225	237,5	250
		Setpoint	Ir, A	Isd, A	1000	1125	1250	1400	1575	1750	2000	2250	2375	2500
	320	0,7	175	3200										
	320	0,8	200	3200										
	320	0,9	225	3200										
	320	1	250	3200										

		Upstream device															
Series		OptiMat D400 N/H (40/65 kA at Ue = 400 V)															
OptiMat D630-TM320	In, A				160	180	200	220	240	260	280	300	320	340	360	380	400
		Setpoint	Ir, A	Isd, A	1600	1800	2000	2200	2400	2600	2800	3000	3200	3400	3600	3800	4000
	320	0,7	175	3200													
	320	0,8	200	3200													
	320	0,9	225	3200													
	320	1	250	3200													

		Upstream device																					
Series		OptiMat D630 N/H (40/65 kA at Ue = 400 V)																					
OptiMat D630-TM320	In, A				250	270	290	310	330	350	370	390	410	430	450	470	490	510	530	550	570	590	610	630
		Setpoint	Ir, A	Isd, A	2500	2700	2900	3100	3300	3500	3700	3900	4100	4300	4500	4700	4900	5100	5300	5500	5700	5900	6100	6300
	320	0,7	175	3200													7000	7000	7000	7000	7000	7000	7000	7000
	320	0,8	200	3200													7000	7000	7000	7000	7000	7000	7000	7000
	320	0,9	225	3200													7000	7000	7000	7000	7000	7000	7000	7000
	320	1	250	3200													7000	7000	7000	7000	7000	7000	7000	7000

		Upstream device															
Series		OptiMat D800 N/H (50/85 kA at Ue = 400 V)															
OptiMat D630-TM320	In, A				320	360	400	440	480	520	560	600	640	680	720	760	800
		Setpoint	Ir, A	Isd, A	3200	3600	4000	4400	4800	5200	5600	6000	6400	6800	7200	7600	8000
	320	0,7	175	3200					9600	9600	9600	9600	9600	9600	9600	9600	9600
	320	0,8	200	3200					9600	9600	9600	9600	9600	9600	9600	9600	9600
	320	0,9	225	3200					9600	9600	9600	9600	9600	9600	9600	9600	9600
	320	1	250	3200					9600	9600	9600	9600	9600	9600	9600	9600	9600

		Upstream device															
Series		OptiMat D1000 N/H (50/85 kA at Ue = 400 V)															
OptiMat D630-TM320	In, A				400	450	500	550	600	650	700	750	800	850	900	950	1000
		Setpoint	Ir, A	Isd, A	4000	4500	5000	5500	6000	6500	7000	7500	8000	8500	9000	9500	10000
	320	0,7	175	3200			12000	12000	12000	12000	12000	12000	12000	12000	12000	12000	12000
	320	0,8	200	3200			12000	12000	12000	12000	12000	12000	12000	12000	12000	12000	12000
	320	0,9	225	3200			12000	12000	12000	12000	12000	12000	12000	12000	12000	12000	12000
	320	1	250	3200			12000	12000	12000	12000	12000	12000	12000	12000	12000	12000	12000

		Upstream device																			
Series		OptiMat D1250 N/H (50/85 kA at Ue = 400 V)																			
OptiMat D630-TM320	In, A				500	550	600	650	700	750	800	850	900	950	1000	1050	1100	1150	1200	1250
		Setpoint	Ir, A	Isd, A	5000	5500	6000	6500	7000	7500	8000	8500	9000	9500	10000	10500	11000	11500	12000	12500
	320	0,7	175	3200	15000	15000	15000	15000	15000	15000	15000	15000	15000	15000	15000	15000	15000	15000	15000	15000
	320	0,8	200	3200	15000	15000	15000	15000	15000	15000	15000	15000	15000	15000	15000	15000	15000	15000	15000	15000
	320	0,9	225	3200	15000	15000	15000	15000	15000	15000	15000	15000	15000	15000	15000	15000	15000	15000	15000	15000
	320	1	250	3200	15000	15000	15000	15000	15000	15000	15000	15000	15000	15000	15000	15000	15000	15000	15000	15000

		Upstream device																			
Series		OptiMat D1600 N/H (50/85 kA at Ue = 400 V)																			
OptiMat D630-TM320	In, A				640	700	760	820	880	940	1000	1060	1120	1180	1240	1300	1360	1420	1480	1540	1600
		Setpoint	Ir, A	Isd, A	6400	7000	7600	8200	8800	9400	10000	10600	11200	11800	12400	13000	13600	14200	14800	15400	16000
	320	0,7	175	3200	19200	19200	19200	19200	19200	19200	19200	19200	19200	19200	19200	19200	19200	19200	19200	19200	19200
	320	0,8	200	3200	19200	19200	19200	19200	19200	19200	19200	19200	19200	19200	19200	19200	19200	19200	19200	19200	19200
	320	0,9	225	3200	19200	19200	19200	19200	19200	19200	19200	19200	19200	19200	19200	19200	19200	19200	19200	19200	19200
	320	1	250	3200	19200	19200	19200	19200	19200	19200	19200	19200	19200	19200	19200	19200	19200	19200	19200	19200	19200

		Upstream device												
Series		OptiMat D100 N/H (40/65 kA at Ue = 400 V)												
OptiMat D630-TM400	In, A				40	45	50	56	63	70	80	90	95	100
		Setpoint	Ir, A	Isd, A	400	450	500	560	630	700	800	900	950	1000
	400	0,7	175	4000										
	400	0,8	200	4000										
	400	0,9	225	4000										
	400	1	250	4000										

		Upstream device												
Series		OptiMat D160 N/H (40/65 kA at Ue = 400 V)												
OptiMat D630-TM400	In, A				64	72	80	89,6	100,8	112	128	144	152	160
		Setpoint	Ir, A	Isd, A	640	720	800	896	1008	1120	1280	1440	1520	1600
	400	0,7	175	4000										
	400	0,8	200	4000										
	400	0,9	225	4000										
	400	1	250	4000										

		Upstream device												
Series		OptiMat D250 N/H (40/65 kA at Ue = 400 V)												
OptiMat D630-TM400	In, A				100	112,5	125	140	157,5	175	200	225	237,5	250
		Setpoint	Ir, A	Isd, A	1000	1125	1250	1400	1575	1750	2000	2250	2375	2500
	400	0,7	175	4000										
	400	0,8	200	4000										
	400	0,9	225	4000										
	400	1	250	4000										

		Upstream device														
Series		OptiMat D400 N/H (40/65 kA at Ue = 400 V)														
OptiMat D630-TM400	In, A				160	180	200	220	240	260	280	300	320	340	360	380	400
		Setpoint	Ir, A	Isd, A	1600	1800	2000	2200	2400	2600	2800	3000	3200	3400	3600	3800	4000
	400	0,7	175	4000													
	400	0,8	200	4000													
	400	0,9	225	4000													
	400	1	250	4000													

		Upstream device																					
Series		OptiMat D630 N/H (40/65 kA at Ue = 400 V)																					
OptiMat D630-TM400	In, A				250	270	290	310	330	350	370	390	410	430	450	470	490	510	530	550	570	590	610	630
		Setpoint	Ir, A	Isd, A	2500	2700	2900	3100	3300	3500	3700	3900	4100	4300	4500	4700	4900	5100	5300	5500	5700	5900	6100	6300
	400	0,7	175	4000																			7000	7000
	400	0,8	200	4000																			7000	7000
	400	0,9	225	4000																			7000	7000
	400	1	250	4000																			7000	7000

		Upstream device														
Series		OptiMat D800 N/H (50/85 kA at Ue = 400 V)														
OptiMat D630-TM400	In, A				320	360	400	440	480	520	560	600	640	680	720	760	800
		Setpoint	Ir, A	Isd, A	3200	3600	4000	4400	4800	5200	5600	6000	6400	6800	7200	7600	8000
	400	0,7	175	4000								9600	9600	9600	9600	9600	9600
	400	0,8	200	4000								9600	9600	9600	9600	9600	9600
	400	0,9	225	4000								9600	9600	9600	9600	9600	9600
	400	1	250	4000								9600	9600	9600	9600	9600	9600

		Upstream device															
Series		OptiMat D1000 N/H (50/85 kA at Ue = 400 V)															
OptiMat D630-TM400	In, A				400	450	500	550	600	650	700	750	800	850	900	950	1000
		Setpoint	Ir, A	Isd, A	4000	4500	5000	5500	6000	6500	7000	7500	8000	8500	9000	9500	10000
	400	0,7	175	4000					12000	12000	12000	12000	12000	12000	12000	12000	12000
	400	0,8	200	4000					12000	12000	12000	12000	12000	12000	12000	12000	12000
	400	0,9	225	4000					12000	12000	12000	12000	12000	12000	12000	12000	12000
	400	1	250	4000					12000	12000	12000	12000	12000	12000	12000	12000	12000

		Upstream device																			
Series		OptiMat D1250 N/H (50/85 kA at Ue = 400 V)																			
OptiMat D630-TM400	In, A				500	550	600	650	700	750	800	850	900	950	1000	1050	1100	1150	1200	1250
		Setpoint	Ir, A	Isd, A	5000	5500	6000	6500	7000	7500	8000	8500	9000	9500	10000	10500	11000	11500	12000	12500
	400	0,7	175	4000			15000	15000	15000	15000	15000	15000	15000	15000	15000	15000	15000	15000	15000	15000
	400	0,8	200	4000			15000	15000	15000	15000	15000	15000	15000	15000	15000	15000	15000	15000	15000	15000
	400	0,9	225	4000			15000	15000	15000	15000	15000	15000	15000	15000	15000	15000	15000	15000	15000	15000
	400	1	250	4000			15000	15000	15000	15000	15000	15000	15000	15000	15000	15000	15000	15000	15000	15000

		Upstream device																			
Series		OptiMat D1600 N/H (50/85 kA at Ue = 400 V)																			
OptiMat D630-TM400	In, A				640	700	760	820	880	940	1000	1060	1120	1180	1240	1300	1360	1420	1480	1540	1600
		Setpoint	Ir, A	Isd, A	6400	7000	7600	8200	8800	9400	10000	10600	11200	11800	12400	13000	13600	14200	14800	15400	16000
	400	0,7	175	4000	19200	19200	19200	19200	19200	19200	19200	19200	19200	19200	19200	19200	19200	19200	19200	19200	19200
	400	0,8	200	4000	19200	19200	19200	19200	19200	19200	19200	19200	19200	19200	19200	19200	19200	19200	19200	19200	19200
	400	0,9	225	4000	19200	19200	19200	19200	19200	19200	19200	19200	19200	19200	19200	19200	19200	19200	19200	19200	19200
	400	1	250	4000	19200	19200	19200	19200	19200	19200	19200	19200	19200	19200	19200	19200	19200	19200	19200	19200	19200

		Upstream device												
Series		OptiMat D100 N/H (40/65 kA at Ue = 400 V)												
OptiMat D630-TM500	In, A				40	45	50	56	63	70	80	90	95	100
		Setpoint	Ir, A	Isd, A	400	450	500	560	630	700	800	900	950	1000
	500	0,7	175	5000										
	500	0,8	200	5000										
	500	0,9	225	5000										
	500	1	250	5000										

		Upstream device												
Series		OptiMat D160 N/H (40/65 kA at Ue = 400 V)												
OptiMat D630-TM500	In, A				64	72	80	89,6	100,8	112	128	144	152	160
		Setpoint	Ir, A	Isd, A	640	720	800	896	1008	1120	1280	1440	1520	1600
	500	0,7	175	5000										
	500	0,8	200	5000										
	500	0,9	225	5000										
	500	1	250	5000										

		Upstream device												
Series		OptiMat D250 N/H (40/65 kA at Ue = 400 V)												
OptiMat D630-TM500	In, A				100	112,5	125	140	157,5	175	200	225	237,5	250
		Setpoint	Ir, A	Isd, A	1000	1125	1250	1400	1575	1750	2000	2250	2375	2500
	500	0,7	175	5000										
	500	0,8	200	5000										
	500	0,9	225	5000										
	500	1	250	5000										

		Upstream device															
Series		OptiMat D400 N/H (40/65 kA at Ue = 400 V)															
OptiMat D630-TM500	In, A				160	180	200	220	240	260	280	300	320	340	360	380	400
		Setpoint	Ir, A	Isd, A	1600	1800	2000	2200	2400	2600	2800	3000	3200	3400	3600	3800	4000
	500	0,7	175	5000													
	500	0,8	200	5000													
	500	0,9	225	5000													
	500	1	250	5000													

		Upstream device																					
Series		OptiMat D630 N/H (40/65 kA at Ue = 400 V)																					
OptiMat D630-TM500	In, A				250	270	290	310	330	350	370	390	410	430	450	470	490	510	530	550	570	590	610	630
		Setpoint	Ir, A	Isd, A	2500	2700	2900	3100	3300	3500	3700	3900	4100	4300	4500	4700	4900	5100	5300	5500	5700	5900	6100	6300
	500	0,7	175	5000																				
	500	0,8	200	5000																				
	500	0,9	225	5000																				
	500	1	250	5000																				

		Upstream device															
Series		OptiMat D800 N/H (50/85 kA at Ue = 400 V)															
OptiMat D630-TM500	In, A				320	360	400	440	480	520	560	600	640	680	720	760	800
		Setpoint	Ir, A	Isd, A	3200	3600	4000	4400	4800	5200	5600	6000	6400	6800	7200	7600	8000
	500	0,7	175	5000												9600	9600
	500	0,8	200	5000												9600	9600
	500	0,9	225	5000												9600	9600
	500	1	250	5000												9600	9600

		Upstream device															
Series		OptiMat D1000 N/H (50/85 kA at Ue = 400 V)															
OptiMat D630-TM500	In, A				400	450	500	550	600	650	700	750	800	850	900	950	1000
		Setpoint	Ir, A	Isd, A	4000	4500	5000	5500	6000	6500	7000	7500	8000	8500	9000	9500	10000
	500	0,7	175	5000								12000	12000	12000	12000	12000	12000
	500	0,8	200	5000								12000	12000	12000	12000	12000	12000
	500	0,9	225	5000								12000	12000	12000	12000	12000	12000
	500	1	250	5000								12000	12000	12000	12000	12000	12000

		Upstream device																			
Series		OptiMat D1250 N/H (50/85 kA at Ue = 400 V)																			
OptiMat D630-TM500	In, A				500	550	600	650	700	750	800	850	900	950	1000	1050	1100	1150	1200	1250
		Setpoint	Ir, A	Isd, A	5000	5500	6000	6500	7000	7500	8000	8500	9000	9500	10000	10500	11000	11500	12000	12500
	500	0,7	175	5000						15000	15000	15000	15000	15000	15000	15000	15000	15000	15000	15000
	500	0,8	200	5000						15000	15000	15000	15000	15000	15000	15000	15000	15000	15000	15000
	500	0,9	225	5000						15000	15000	15000	15000	15000	15000	15000	15000	15000	15000	15000
	500	1	250	5000						15000	15000	15000	15000	15000	15000	15000	15000	15000	15000	15000

		Upstream device																			
Series		OptiMat D1600 N/H (50/85 kA at Ue = 400 V)																			
OptiMat D630-TM500	In, A				640	700	760	820	880	940	1000	1060	1120	1180	1240	1300	1360	1420	1480	1540	1600
		Setpoint	Ir, A	Isd, A	6400	7000	7600	8200	8800	9400	10000	10600	11200	11800	12400	13000	13600	14200	14800	15400	16000
	500	0,7	175	5000			19200	19200	19200	19200	19200	19200	19200	19200	19200	19200	19200	19200	19200	19200	19200
	500	0,8	200	5000			19200	19200	19200	19200	19200	19200	19200	19200	19200	19200	19200	19200	19200	19200	19200
	500	0,9	225	5000			19200	19200	19200	19200	19200	19200	19200	19200	19200	19200	19200	19200	19200	19200	19200
	500	1	250	5000			19200	19200	19200	19200	19200	19200	19200	19200	19200	19200	19200	19200	19200	19200	19200

		Upstream device												
Series		OptiMat D100 N/H (40/65 kA at Ue = 400 V)												
OptiMat D630-TM630	In, A				40	45	50	56	63	70	80	90	95	100
		Setpoint	Ir, A	Isd, A	400	450	500	560	630	700	800	900	950	1000
	630	0,7	175	6300										
	630	0,8	200	6300										
	630	0,9	225	6300										
	630	1	250	6300										

		Upstream device												
Series		OptiMat D160 N/H (40/65 kA at Ue = 400 V)												
OptiMat D630-TM630	In, A				64	72	80	89,6	100,8	112	128	144	152	160
		Setpoint	Ir, A	Isd, A	640	720	800	896	1008	1120	1280	1440	1520	1600
	630	0,7	175	6300										
	630	0,8	200	6300										
	630	0,9	225	6300										
	630	1	250	6300										

		Upstream device												
Series		OptiMat D250 N/H (40/65 kA at Ue = 400 V)												
OptiMat D630-TM630	In, A				100	112,5	125	140	157,5	175	200	225	237,5	250
		Setpoint	Ir, A	Isd, A	1000	1125	1250	1400	1575	1750	2000	2250	2375	2500
	630	0,7	175	6300										
	630	0,8	200	6300										
	630	0,9	225	6300										
	630	1	250	6300										

		Upstream device														
Series		OptiMat D400 N/H (40/65 kA at Ue = 400 V)														
OptiMat D630-TM630	In, A				160	180	200	220	240	260	280	300	320	340	360	380	400
		Setpoint	Ir, A	Isd, A	1600	1800	2000	2200	2400	2600	2800	3000	3200	3400	3600	3800	4000
	630	0,7	175	6300													
	630	0,8	200	6300													
	630	0,9	225	6300													
	630	1	250	6300													

		Upstream device																					
Series		OptiMat D630 N/H (40/65 kA at Ue = 400 V)																					
OptiMat D630-TM630	In, A				250	270	290	310	330	350	370	390	410	430	450	470	490	510	530	550	570	590	610	630
		Setpoint	Ir, A	Isd, A	2500	2700	2900	3100	3300	3500	3700	3900	4100	4300	4500	4700	4900	5100	5300	5500	5700	5900	6100	6300
	630	0,7	175	6300																				
	630	0,8	200	6300																				
	630	0,9	225	6300																				
	630	1	250	6300																				

		Upstream device														
Series		OptiMat D800 N/H (50/85 kA at Ue = 400 V)														
OptiMat D630-TM630	In, A				320	360	400	440	480	520	560	600	640	680	720	760	800
		Setpoint	Ir, A	Isd, A	3200	3600	4000	4400	4800	5200	5600	6000	6400	6800	7200	7600	8000
	630	0,7	175	6300													
	630	0,8	200	6300													
	630	0,9	225	6300													
	630	1	250	6300													

		Upstream device															
Series		OptiMat D1000 N/H (50/85 kA at Ue = 400 V)															
OptiMat D630-TM630	In, A				400	450	500	550	600	650	700	750	800	850	900	950	1000
		Setpoint	Ir, A	Isd, A	4000	4500	5000	5500	6000	6500	7000	7500	8000	8500	9000	9500	10000
	630	0,7	175	6300												12000	12000
	630	0,8	200	6300												12000	12000
	630	0,9	225	6300												12000	12000
	630	1	250	6300												12000	12000

		Upstream device																		
Series		OptiMat D1250 N/H (50/85 kA at Ue = 400 V)																		
OptiMat D630-TM630	In, A				500	550	600	650	700	750	800	850	900	950	1000	1050	1100	1150	1200	1250
		Setpoint	Ir, A	Isd, A	5000	5500	6000	6500	7000	7500	8000	8500	9000	9500	10000	10500	11000	11500	12000	12500
	630	0,7	175	6300										15000	15000	15000	15000	15000	15000	15000
	630	0,8	200	6300										15000	15000	15000	15000	15000	15000	15000
	630	0,9	225	6300										15000	15000	15000	15000	15000	15000	15000
	630	1	250	6300										15000	15000	15000	15000	15000	15000	15000

		Upstream device																			
Series		OptiMat D1600 N/H (50/85 kA at Ue = 400 V)																			
OptiMat D630-TM630	In, A				640	700	760	820	880	940	1000	1060	1120	1180	1240	1300	1360	1420	1480	1540	1600
		Setpoint	Ir, A	Isd, A	6400	7000	7600	8200	8800	9400	10000	10600	11200	11800	12400	13000	13600	14200	14800	15400	16000
	630	0,7	175	6300							19200	19200	19200	19200	19200	19200	19200	19200	19200	19200	19200
	630	0,8	200	6300							19200	19200	19200	19200	19200	19200	19200	19200	19200	19200	19200
	630	0,9	225	6300							19200	19200	19200	19200	19200	19200	19200	19200	19200	19200	19200
	630	1	250	6300							19200	19200	19200	19200	19200	19200	19200	19200	19200	19200	19200

Примечание: 1200 Selectivity current limit Is = 1200 A
Selectivity not ensured

OptiMat D-MR - OptiMat E

Series	Upstream device											
	OptiMat D100 N/H (40/65 kA at Ue = 400 V)											
OptiMat E100 L/N (10/20 kA at Ue = 400 V)	In, A		40	45	50	56	63	70	80	90	95	100
		Isd, A	400	450	500	560	630	700	800	900	950	1000
	16	350						1200	1200	1200	1200	1200
	20	400							1200	1200	1200	1200
	25	400							1200	1200	1200	1200
	32	400							1200	1200	1200	1200
	40	400							1200	1200	1200	1200
	50	500										1200
	63	630										
	80	800										
	100	1000										

Series	Upstream device											
	OptiMat D160 N/H (40/65 kA at Ue = 400 V)											
OptiMat E100 L/N (10/20 kA at Ue = 400 V)	In, A		64	72	80	89,6	100,8	112	128	144	152	160
		Isd, A	640	720	800	896	1008	1120	1280	1440	1520	1600
	16	350		2000	2000	2000	2000	2000	2000	2000	2000	2000
	20	400			2000	2000	2000	2000	2000	2000	2000	2000
	25	400			2000	2000	2000	2000	2000	2000	2000	2000
	32	400			2000	2000	2000	2000	2000	2000	2000	2000
	40	400			2000	2000	2000	2000	2000	2000	2000	2000
	50	500					2000	2000	2000	2000	2000	2000
	63	630							2000	2000	2000	2000
	80	800										2000
	100	1000										

Series	Upstream device											
	OptiMat D250 N/H (40/65 kA at Ue = 400 V)											
OptiMat E100 L/N (10/20 kA at Ue = 400 V)	In, A		100	112,5	125	140	157,5	175	200	225	237,5	250
		Isd, A	1000	1130	1250	1400	1580	1750	2000	2250	2380	2500
	16	350	3000	3000	3000	3000	3000	3000	3000	3000	3000	3000
	20	400	3000	3000	3000	3000	3000	3000	3000	3000	3000	3000
	25	400	3000	3000	3000	3000	3000	3000	3000	3000	3000	3000
	32	400	3000	3000	3000	3000	3000	3000	3000	3000	3000	3000
	40	400	3000	3000	3000	3000	3000	3000	3000	3000	3000	3000
	50	500	3000	3000	3000	3000	3000	3000	3000	3000	3000	3000
	63	630				3000	3000	3000	3000	3000	3000	3000
	80	800						3000	3000	3000	3000	3000
	100	1000							3000	3000	3000	3000

Series	Upstream device														
	OptiMat D400 N/H (40/65 kA at Ue = 400 V)														
OptiMat E100 L/N (10/20 kA at Ue = 400 V)	In, A		160	180	200	220	240	260	280	300	320	340	360	380	400
		Isd, A	1600	1800	2000	2200	2400	2600	2800	3000	3200	3400	3600	3800	4000
	16	350	5000	5000	5000	5000	5000	5000	5000	5000	5000	5000	5000	5000	5000
	20	400	5000	5000	5000	5000	5000	5000	5000	5000	5000	5000	5000	5000	5000
	25	400	5000	5000	5000	5000	5000	5000	5000	5000	5000	5000	5000	5000	5000
	32	400	5000	5000	5000	5000	5000	5000	5000	5000	5000	5000	5000	5000	5000
	40	400	5000	5000	5000	5000	5000	5000	5000	5000	5000	5000	5000	5000	5000
	50	500	5000	5000	5000	5000	5000	5000	5000	5000	5000	5000	5000	5000	5000
	63	630	5000	5000	5000	5000	5000	5000	5000	5000	5000	5000	5000	5000	5000
	80	800	5000	5000	5000	5000	5000	5000	5000	5000	5000	5000	5000	5000	5000
	100	1000			5000	5000	5000	5000	5000	5000	5000	5000	5000	5000	5000

Series	Upstream device																					
	OptiMat D630 N/H (40/65 kA at Ue = 400 V)																					
OptiMat E100 L/N (10/20 kA at Ue = 400 V)	In, A		250	270	290	310	330	350	370	390	410	430	450	470	490	510	530	550	570	590	610	630
		Isd, A	2500	2700	2900	3100	3300	3500	3700	3900	4100	4300	4500	4700	4900	5100	5300	5500	5700	5900	6100	6300
	16	350	7000	7000	7000	7000	7000	7000	7000	7000	7000	7000	7000	7000	7000	7000	7000	7000	7000	7000	7000	7000
	20	400	7000	7000	7000	7000	7000	7000	7000	7000	7000	7000	7000	7000	7000	7000	7000	7000	7000	7000	7000	7000
	25	400	7000	7000	7000	7000	7000	7000	7000	7000	7000	7000	7000	7000	7000	7000	7000	7000	7000	7000	7000	7000
	32	400	7000	7000	7000	7000	7000	7000	7000	7000	7000	7000	7000	7000	7000	7000	7000	7000	7000	7000	7000	7000
	40	400	7000	7000	7000	7000	7000	7000	7000	7000	7000	7000	7000	7000	7000	7000	7000	7000	7000	7000	7000	7000
	50	500	7000	7000	7000	7000	7000	7000	7000	7000	7000	7000	7000	7000	7000	7000	7000	7000	7000	7000	7000	7000
	63	630	7000	7000	7000	7000	7000	7000	7000	7000	7000	7000	7000	7000	7000	7000	7000	7000	7000	7000	7000	7000
	80	800	7000	7000	7000	7000	7000	7000	7000	7000	7000	7000	7000	7000	7000	7000	7000	7000	7000	7000	7000	7000
	100	1000	7000	7000	7000	7000	7000	7000	7000	7000	7000	7000	7000	7000	7000	7000	7000	7000	7000	7000	7000	7000

Series	Upstream device														
	OptiMat D800 N/H (50/85 kA at Ue = 400 V)														
OptiMat E100 L/N (10/20 kA at Ue = 400 V)	In, A		320	360	400	440	480	520	560	600	640	680	720	760	800
		Isd, A	3200	3600	4000	4400	4800	5200	5600	6000	6400	6800	7200	7600	8000
	16	350	9600	9600	9600	9600	9600	9600	9600	9600	9600	9600	9600	9600	9600
	20	400	9600	9600	9600	9600	9600	9600	9600	9600	9600	9600	9600	9600	9600
	25	400	9600	9600	9600	9600	9600	9600	9600	9600	9600	9600	9600	9600	9600
	32	400	9600	9600	9600	9600	9600	9600	9600	9600	9600	9600	9600	9600	9600
	40	400	9600	9600	9600	9600	9600	9600	9600	9600	9600	9600	9600	9600	9600
	50	500	9600	9600	9600	9600	9600	9600	9600	9600	9600	9600	9600	9600	9600
	63	630	9600	9600	9600	9600	9600	9600	9600	9600	9600	9600	9600	9600	9600
	80	800	9600	9600	9600	9600	9600	9600	9600	9600	9600	9600	9600	9600	9600
	100	1000	9600	9600	9600	9600	9600	9600	9600	9600	9600	9600	9600	9600	9600

Series	Upstream device														
	OptiMat D1000 N/H (50/85 kA at Ue = 400 V)														
OptiMat E100 L/N (10/20 kA at Ue = 400 V)	In, A		400	450	500	550	600	650	700	750	800	850	900	950	1000
		Isd, A	4000	4500	5000	5500	6000	6500	7000	7500	8000	8500	9000	9500	10000
	16	350	T/12000	T/12000	T/12000	T/12000	T/12000	T/12000	T/12000	T/12000	T/12000	T/12000	T/12000	T/12000	T/12000
	20	400	T/12000	T/12000	T/12000	T/12000	T/12000	T/12000	T/12000	T/12000	T/12000	T/12000	T/12000	T/12000	T/12000
	25	400	T/12000	T/12000	T/12000	T/12000	T/12000	T/12000	T/12000	T/12000	T/12000	T/12000	T/12000	T/12000	T/12000
	32	400	T/12000	T/12000	T/12000	T/12000	T/12000	T/12000	T/12000	T/12000	T/12000	T/12000	T/12000	T/12000	T/12000
	40	400	T/12000	T/12000	T/12000	T/12000	T/12000	T/12000	T/12000	T/12000	T/12000	T/12000	T/12000	T/12000	T/12000
	50	500	T/12000	T/12000	T/12000	T/12000	T/12000	T/12000	T/12000	T/12000	T/12000	T/12000	T/12000	T/12000	T/12000
	63	630	T/12000	T/12000	T/12000	T/12000	T/12000	T/12000	T/12000	T/12000	T/12000	T/12000	T/12000	T/12000	T/12000
	80	800	T/12000	T/12000	T/12000	T/12000	T/12000	T/12000	T/12000	T/12000	T/12000	T/12000	T/12000	T/12000	T/12000
	100	1000	T/12000	T/12000	T/12000	T/12000	T/12000	T/12000	T/12000	T/12000	T/12000	T/12000	T/12000	T/12000	T/12000

Series	Upstream device																		
	OptiMat D1250 N/H (50/85 kA at Ue = 400 V)																		
OptiMat E100 L/N (10/20 kA at Ue = 400 V)	In, A		500	550	600	650	700	750	800	850	900	950	1000	1050	1100	1150	1200	1250
		Isd, A	5000	5500	6000	6500	7000	7500	8000	8500	9000	9500	10000	10500	11000	11500	12000	12500
	16	350	T/15000	T/15000	T/15000	T/15000	T/15000	T/15000	T/15000	T/15000	T/15000	T/15000	T/15000	T/15000	T/15000	T/15000	T/15000	T/15000
	20	400	T/15000	T/15000	T/15000	T/15000	T/15000	T/15000	T/15000	T/15000	T/15000	T/15000	T/15000	T/15000	T/15000	T/15000	T/15000	T/15000
	25	400	T/15000	T/15000	T/15000	T/15000	T/15000	T/15000	T/15000	T/15000	T/15000	T/15000	T/15000	T/15000	T/15000	T/15000	T/15000	T/15000
	32	400	T/15000	T/15000	T/15000	T/15000	T/15000	T/15000	T/15000	T/15000	T/15000	T/15000	T/15000	T/15000	T/15000	T/15000	T/15000	T/15000
	40	400	T/15000	T/15000	T/15000	T/15000	T/15000	T/15000	T/15000	T/15000	T/15000	T/15000	T/15000	T/15000	T/15000	T/15000	T/15000	T/15000
	50	500	T/15000	T/15000	T/15000	T/15000	T/15000	T/15000	T/15000	T/15000	T/15000	T/15000	T/15000	T/15000	T/15000	T/15000	T/15000	T/15000
	63	630	T/15000	T/15000	T/15000	T/15000	T/15000	T/15000	T/15000	T/15000	T/15000	T/15000	T/15000	T/15000	T/15000	T/15000	T/15000	T/15000
	80	800	T/15000	T/15000	T/15000	T/15000	T/15000	T/15000	T/15000	T/15000	T/15000	T/15000	T/15000	T/15000	T/15000	T/15000	T/15000	T/15000
	100	1000	T/15000	T/15000	T/15000	T/15000	T/15000	T/15000	T/15000	T/15000	T/15000	T/15000	T/15000	T/15000	T/15000	T/15000	T/15000	T/15000

	Upstream device																		
Series	OptiMat D1600 N/H (50/85 kA at Ue = 400 V)																		
OptiMat E100 L/N (10/20 kA at Ue = 400 V)	In, A		640	700	760	820	880	940	1000	1060	1120	1180	1240	1300	1360	1420	1480	1540	1600
		Isd, A	6400	7000	7600	8200	8800	9400	10000	10600	11200	11800	12400	13000	13600	14200	14800	15400	16000
	16	350	T/19200	T/19200	T/19200	T/19200	T/19200	T/19200	T/19200	T/19200	T/19200	T/19200	T/19200	T/19200	T/19200	T/19200	T/19200	T/19200	T/19200
	20	400	T/19200	T/19200	T/19200	T/19200	T/19200	T/19200	T/19200	T/19200	T/19200	T/19200	T/19200	T/19200	T/19200	T/19200	T/19200	T/19200	T/19200
	25	400	T/19200	T/19200	T/19200	T/19200	T/19200	T/19200	T/19200	T/19200	T/19200	T/19200	T/19200	T/19200	T/19200	T/19200	T/19200	T/19200	T/19200
	32	400	T/19200	T/19200	T/19200	T/19200	T/19200	T/19200	T/19200	T/19200	T/19200	T/19200	T/19200	T/19200	T/19200	T/19200	T/19200	T/19200	T/19200
	40	400	T/19200	T/19200	T/19200	T/19200	T/19200	T/19200	T/19200	T/19200	T/19200	T/19200	T/19200	T/19200	T/19200	T/19200	T/19200	T/19200	T/19200
	50	500	T/19200	T/19200	T/19200	T/19200	T/19200	T/19200	T/19200	T/19200	T/19200	T/19200	T/19200	T/19200	T/19200	T/19200	T/19200	T/19200	T/19200
	63	630	T/19200	T/19200	T/19200	T/19200	T/19200	T/19200	T/19200	T/19200	T/19200	T/19200	T/19200	T/19200	T/19200	T/19200	T/19200	T/19200	T/19200
	80	800	T/19200	T/19200	T/19200	T/19200	T/19200	T/19200	T/19200	T/19200	T/19200	T/19200	T/19200	T/19200	T/19200	T/19200	T/19200	T/19200	T/19200
	100	1000	T/19200	T/19200	T/19200	T/19200	T/19200	T/19200	T/19200	T/19200	T/19200	T/19200	T/19200	T/19200	T/19200	T/19200	T/19200	T/19200	T/19200

	Upstream device											
Series	OptiMat D100 N/H (40/65 kA at Ue = 400 V)											
OptiMat E250 L/N/H (18/25/40 kA at Ue = 400 V)	In, A		40	45	50	56	63	70	80	90	95	100
		Isd, A	400	450	500	560	630	700	800	900	950	1000
	125	1250										
	160	1600										
	200	2000										
	250	2500										

	Upstream device											
Series	OptiMat D160 N/H (40/65 kA at Ue = 400 V)											
OptiMat E250 L/N/H (18/25/40 kA at Ue = 400 V)	In, A		64	72	80	89,6	100,8	112	128	144	152	160
		Isd, A	640	720	800	896	1008	1120	1280	1440	1520	1600
	125	1250										
	160	1600										
	200	2000										
	250	2500										

	Upstream device											
Series	OptiMat D250 N/H (40/65 kA at Ue = 400 V)											
OptiMat E250 L/N/H (18/25/40 kA at Ue = 400 V)	In, A		100	112,5	125	140	157,5	175	200	225	237,5	250
		Isd, A	1000	1130	1250	1400	1580	1750	2000	2250	2380	2500
	125	1250										3000
	160	1600										
	200	2000										
	250	2500										

	Upstream device														
Series	OptiMat D400 N/H (40/65 kA at Ue = 400 V)														
OptiMat E250 L/N/H (18/25/40 kA at Ue = 400 V)	In, A		160	180	200	220	240	260	280	300	320	340	360	380	400
		Isd, A	1600	1800	2000	2200	2400	2600	2800	3000	3200	3400	3600	3800	4000
	125	1250						5000	5000	5000	5000	5000	5000	5000	5000
	160	1600									5000	5000	5000	5000	5000
	200	2000													5000
	250	2500													

Series	Upstream device		OptiMat D630 N/H (40/65 kA at Ue = 400 V)																			
OptiMat E250 L/N/H (18/25/40 kA at Ue = 400 V)	In, A		250	270	290	310	330	350	370	390	410	430	450	470	490	510	530	550	570	590	610	630
		Isd, A	2500	2700	2900	3100	3300	3500	3700	3900	4100	4300	4500	4700	4900	5100	5300	5500	5700	5900	6100	6300
	125	1250	7000	7000	7000	7000	7000	7000	7000	7000	7000	7000	7000	7000	7000	7000	7000	7000	7000	7000	7000	7000
	160	1600					7000	7000	7000	7000	7000	7000	7000	7000	7000	7000	7000	7000	7000	7000	7000	7000
	200	2000									7000	7000	7000	7000	7000	7000	7000	7000	7000	7000	7000	7000
	250	2500														7000	7000	7000	7000	7000	7000	7000

Series	Upstream device		OptiMat D800 N/H (50/85 kA at Ue = 400 V)												
OptiMat E250 L/N/H (18/25/40 kA at Ue = 400 V)	In, A		320	360	400	440	480	520	560	600	640	680	720	760	800
		Isd, A	3200	3600	4000	4400	4800	5200	5600	6000	6400	6800	7200	7600	8000
	125	1250	9600	9600	9600	9600	9600	9600	9600	9600	9600	9600	9600	9600	9600
	160	1600	9600	9600	9600	9600	9600	9600	9600	9600	9600	9600	9600	9600	9600
	200	2000			9600	9600	9600	9600	9600	9600	9600	9600	9600	9600	9600
	250	2500						9600	9600	9600	9600	9600	9600	9600	9600

Series	Upstream device		OptiMat D1000 N/H (50/85 kA at Ue = 400 V)												
OptiMat E250 L/N/H (18/25/40 kA at Ue = 400 V)	In, A		400	450	500	550	600	650	700	750	800	850	900	950	1000
		Isd, A	4000	4500	5000	5500	6000	6500	7000	7500	8000	8500	9000	9500	10000
	125	1250	12000	12000	12000	12000	12000	12000	12000	12000	12000	12000	12000	12000	12000
	160	1600	12000	12000	12000	12000	12000	12000	12000	12000	12000	12000	12000	12000	12000
	200	2000	12000	12000	12000	12000	12000	12000	12000	12000	12000	12000	12000	12000	12000
	250	2500			12000	12000	12000	12000	12000	12000	12000	12000	12000	12000	12000

Series	Upstream device		OptiMat D1250 N/H (50/85 kA at Ue = 400 V)															
OptiMat E250 L/N/H (18/25/40 kA at Ue = 400 V)	In, A		500	550	600	650	700	750	800	850	900	950	1000	1050	1100	1150	1200	1250
		Isd, A	5000	5500	6000	6500	7000	7500	8000	8500	9000	9500	10000	10500	11000	11500	12000	12500
	125	1250	15000	15000	15000	15000	15000	15000	15000	15000	15000	15000	15000	15000	15000	15000	15000	15000
	160	1600	15000	15000	15000	15000	15000	15000	15000	15000	15000	15000	15000	15000	15000	15000	15000	15000
	200	2000	15000	15000	15000	15000	15000	15000	15000	15000	15000	15000	15000	15000	15000	15000	15000	15000
	250	2500	15000	15000	15000	15000	15000	15000	15000	15000	15000	15000	15000	15000	15000	15000	15000	15000

Series	Upstream device		OptiMat D1600 N/H (50/85 kA at Ue = 400 V)																
OptiMat E250 L/N/H (18/25/40 kA at Ue = 400 V)	In, A		640	700	760	820	880	940	1000	1060	1120	1180	1240	1300	1360	1420	1480	1540	1600
		Isd, A	6400	7000	7600	8200	8800	9400	10000	10600	11200	11800	12400	13000	13600	14200	14800	15400	16000
	125	1250	T/19200	T/19200	T/19200	T/19200	T/19200	T/19200	T/19200	T/19200	T/19200	T/19200	T/19200	T/19200	T/19200	T/19200	T/19200	T/19200	T/19200
	160	1600	T/19200	T/19200	T/19200	T/19200	T/19200	T/19200	T/19200	T/19200	T/19200	T/19200	T/19200	T/19200	T/19200	T/19200	T/19200	T/19200	T/19200
	200	2000	T/19200	T/19200	T/19200	T/19200	T/19200	T/19200	T/19200	T/19200	T/19200	T/19200	T/19200	T/19200	T/19200	T/19200	T/19200	T/19200	T/19200
	250	2500	T/19200	T/19200	T/19200	T/19200	T/19200	T/19200	T/19200	T/19200	T/19200	T/19200	T/19200	T/19200	T/19200	T/19200	T/19200	T/19200	T/19200

Примечание:
- 1200 — Selectivity current limit Is = 1200 A
- T — Complete selectivity
- Selectivity not ensured

OptiMat D-TM - OptiMat E

			Upstream device																			
Series			OptiMat D250-TM016				OptiMat D250-TM020				OptiMat D250-TM025				OptiMat D250-TM032				OptiMat D250-TM040			
OptiMat E100	In, A		16	16	16	16	20	20	20	20	25	25	25	25	32	32	32	32	40	40	40	40
		Setpoint	0,7	0,8	0,9	1	0,7	0,8	0,9	1	0,7	0,8	0,9	1	0,7	0,8	0,9	1	0,7	0,8	0,9	1
		Ir, A	11,2	12,8	14,4	16	14	16	18	20	17,5	20	22,5	25	22,4	25,6	28,8	32	28	32	36	40
		Isd, A	160	160	160	160	200	200	200	200	250	250	250	250	320	320	320	320	400	400	400	400
	16	350																				
	20	400																				
	25	400																				
	32	400																				
	40	400																				
	50	500																				
	63	630																				
	80	800																				
	100	1000																				

			Upstream device															
Series			OptiMat D250-TM050				OptiMat D250-TM063				OptiMat D250-TM080				OptiMat D250-TM100			
OptiMat E100	In, A		50	50	50	50	63	63	63	63	80	80	80	80	100	100	100	100
		Setpoint	0,7	0,8	0,9	1	0,7	0,8	0,9	1	0,7	0,8	0,9	1	0,7	0,8	0,9	1
		Ir, A	35	40	45	50	44,1	50,4	56,7	63	56	64	72	80	70	80	90	100
		Isd, A	500	500	500	500	630	630	630	630	800	800	800	800	1000	1000	1000	1000
	16	350									640	640	640	640	800	800	800	800
	20	400									640	640	640	640	800	800	800	800
	25	400									640	640	640	640	800	800	800	800
	32	400									640	640	640	640	800	800	800	800
	40	400										640	640	640	800	800	800	800
	50	500														800	800	800
	63	630																
	80	800																
	100	1000																

			Upstream device															
Series			OptiMat D250-TM125				OptiMat D250-TM160				OptiMat D250-TM200				OptiMat D250-TM250			
OptiMat E100	In, A		125	125	125	125	160	160	160	160	200	200	200	200	250	250	250	250
		Setpoint	0,7	0,8	0,9	1	0,7	0,8	0,9	1	0,7	0,8	0,9	1	0,7	0,8	0,9	1
		Ir, A	87,5	100	112,5	125	112	128	144	160	140	160	180	200	175	200	225	250
		Isd, A	1250	1250	1250	1250	1600	1600	1600	1600	2000	2000	2000	2000	2500	2500	2500	2500
	16	350	1000	1000	1000	1000	1280	1280	1280	1280	1600	1600	1600	1600	2000	2000	2000	2000
	20	400	1000	1000	1000	1000	1280	1280	1280	1280	1600	1600	1600	1600	2000	2000	2000	2000
	25	400	1000	1000	1000	1000	1280	1280	1280	1280	1600	1600	1600	1600	2000	2000	2000	2000
	32	400	1000	1000	1000	1000	1280	1280	1280	1280	1600	1600	1600	1600	2000	2000	2000	2000
	40	400	1000	1000	1000	1000	1280	1280	1280	1280	1600	1600	1600	1600	2000	2000	2000	2000
	50	500	1000	1000	1000	1000	1280	1280	1280	1280	1600	1600	1600	1600	2000	2000	2000	2000
	63	630					1280	1280	1280	1280	1600	1600	1600	1600	2000	2000	2000	2000
	80	800						1280	1280	1280	1600	1600	1600	1600	2000	2000	2000	2000
	100	1000										1600	1600	1600	2000	2000	2000	2000

Series			OptiMat D630-TM320				OptiMat D630-TM400				OptiMat D630-TM500				OptiMat D630-TM630			
OptiMat E100	In, A		320	320	320	320	400	400	400	400	500	500	500	500	630	630	630	630
		Setpoint	0,7	0,8	0,9	1	0,7	0,8	0,9	1	0,7	0,8	0,9	1	0,7	0,8	0,9	1
		Ir, A	224	256	288	320	280	320	360	400	350	400	450	500	441	504	567	630
		Isd, A	3200	3200	3200	3200	4000	4000	4000	4000	5000	5000	5000	5000	6300	6300	6300	6300
	16	350	2560	2560	2560	2560	3200	3200	3200	3200	4000	4000	4000	4000	5040	5040	5040	5040
	20	400	2560	2560	2560	2560	3200	3200	3200	3200	4000	4000	4000	4000	5040	5040	5040	5040
	25	400	2560	2560	2560	2560	3200	3200	3200	3200	4000	4000	4000	4000	5040	5040	5040	5040
	32	400	2560	2560	2560	2560	3200	3200	3200	3200	4000	4000	4000	4000	5040	5040	5040	5040
	40	400	2560	2560	2560	2560	3200	3200	3200	3200	4000	4000	4000	4000	5040	5040	5040	5040
	50	500	2560	2560	2560	2560	3200	3200	3200	3200	4000	4000	4000	4000	5040	5040	5040	5040
	63	630	2560	2560	2560	2560	3200	3200	3200	3200	4000	4000	4000	4000	5040	5040	5040	5040
	80	800	2560	2560	2560	2560	3200	3200	3200	3200	4000	4000	4000	4000	5040	5040	5040	5040
	100	1000	2560	2560	2560	2560	3200	3200	3200	3200	4000	4000	4000	4000	5040	5040	5040	5040

			Upstream device																			
Series			OptiMat D250-TM016				OptiMat D250-TM020				OptiMat D250-TM025				OptiMat D250-TM032				OptiMat D250-TM040			
OptiMat E250	In, A		16	16	16	16	20	20	20	20	25	25	25	25	32	32	32	32	40	40	40	40
		Setpoint	0,7	0,8	0,9	1	0,7	0,8	0,9	1	0,7	0,8	0,9	1	0,7	0,8	0,9	1	0,7	0,8	0,9	1
		Ir, A	11,2	12,8	14,4	16	14	16	18	20	17,5	20	22,5	25	22,4	25,6	28,8	32	28	32	36	40
		Isd, A	160	160	160	160	200	200	200	200	250	250	250	250	320	320	320	320	400	400	400	400
	125	1250																				
	160	1600																				
	200	2000																				
	250	2500																				

			Upstream device															
Series			OptiMat D250-TM050				OptiMat D250-TM063				OptiMat D250-TM080				OptiMat D250-TM100			
OptiMat E250	In, A		50	50	50	50	63	63	63	63	80	80	80	80	100	100	100	100
		Setpoint	0,7	0,8	0,9	1	0,7	0,8	0,9	1	0,7	0,8	0,9	1	0,7	0,8	0,9	1
		Ir, A	35	40	45	50	44,1	50,4	56,7	63	56	64	72	80	70	80	90	100
		Isd, A	500	500	500	500	630	630	630	630	800	800	800	800	1000	1000	1000	1000
	125	1250																
	160	1600																
	200	2000																
	250	2500																

			Upstream device															
Series			OptiMat D250-TM125				OptiMat D250-TM160				OptiMat D250-TM200				OptiMat D250-TM250			
OptiMat E250	In, A		125	125	125	125	160	160	160	160	200	200	200	200	250	250	250	250
		Setpoint	0,7	0,8	0,9	1	0,7	0,8	0,9	1	0,7	0,8	0,9	1	0,7	0,8	0,9	1
		Ir, A	87,5	100	112,5	125	112	128	144	160	140	160	180	200	175	200	225	250
		Isd, A	1250	1250	1250	1250	1600	1600	1600	1600	2000	2000	2000	2000	2500	2500	2500	2500
	125	1250														2000	2000	2000
	160	1600																
	200	2000																
	250	2500																

			Upstream device															
Series			OptiMat D630-TM320				OptiMat D630-TM400				OptiMat D630-TM500				OptiMat D630-TM630			
OptiMat E250	In, A		320	320	320	320	400	400	400	400	500	500	500	500	630	630	630	630
		Setpoint	0,7	0,8	0,9	1	0,7	0,8	0,9	1	0,7	0,8	0,9	1	0,7	0,8	0,9	1
		Ir, A	224	256	288	320	280	320	360	400	350	400	450	500	441	504	567	630
		Isd, A	3200	3200	3200	3200	4000	4000	4000	4000	5000	5000	5000	5000	6300	6300	6300	6300
	125	1250	2560	2560	2560	2560	3200	3200	3200	3200	4000	4000	4000	4000	5040	5040	5040	5040
	160	1600		2560	2560	2560	3200	3200	3200	3200	4000	4000	4000	4000	5040	5040	5040	5040
	200	2000						3200	3200	3200	4000	4000	4000	4000	5040	5040	5040	5040
	250	2500										4000	4000	4000	5040	5040	5040	5040

Примечание: 1000 Selectivity current limit Is = 1000 A
Selectivity not ensured

OptiMat A

Series			Upstream device														
			OptiMat A-S1 (50 kA)					OptiMat A-S1 (50 kA)					OptiMat A-S2 (65 kA)				
			Ii : OFF					Ii : ON = 15*In					Ii : OFF				
	In, A		630	800	1000	1250	1600	630	800	1000	1250	1600	630	800	1000	1250	1600
		Isd, A	6300	8000	10000	12500	16000	6300	8000	10000	12500	16000	6300	8000	10000	12500	16000
OptiMat A-S1 (50 kA)	630	6300			T	T	T			12750	15938	20400			T	T	T
	800	8000				T	T				15938	20400				T	T
	1000	10000					T					20400					T
	1250	12500															
	1600	16000															
OptiMat A-S2 (65 kA)	630	6300			T/50	T/50	T/50			12750	15938	20400			T	T	T
	800	8000				T/50	T/50				15938	20400				T	T
	1000	10000					T/50					20400					T
	1250	12500															
	1600	16000															
OptiMat A-S2 (85 kA)	630	6300			T/50	T/50	T/50			12750	15938	20400			T/65	T/65	T/65
	800	8000				T/50	T/50				15938	20400				T/65	T/65
	1000	10000					T/50					20400					T/65
	1250	12500															
	1600	16000															
	2000	20000															
OptiMat A-S4 (100 kA)	2500	25000															
	3200	32000															
	4000	40000															
OptiMat A-S5 (120 kA)	5000	50000															
	6300	63000															
OptiMat A-S6 (120 kA)	5000	50000															
	6300	63000															

Series			Upstream device															
			OptiMat A-S2 (65 kA)					OptiMat A-S2 (85 kA)						OptiMat A-S2 (85 kA)					
			Ii : ON = 15*In					Ii : OFF						Ii : ON = 15*In					
	In, A		630	800	1000	1250	1600	630	800	1000	1250	1600	2000	630	800	1000	1250	1600	2000
		Isd, A	6300	8000	10000	12500	16000	6300	8000	10000	12500	16000	20000	6300	8000	10000	12500	16000	20000
OptiMat A-S1 (50 kA)	630	6300			12750	15938	20400			T	T	T	T			12750	15938	20400	25500
	800	8000				15938	20400				T	T	T				15938	20400	25500
	1000	10000					20400					T	T					20400	25500
	1250	12500											T						25500
	1600	16000																	
OptiMat A-S2 (65 kA)	630	6300			12750	15938	20400			T	T	T	T			12750	15938	20400	25500
	800	8000				15938	20400				T	T	T				15938	20400	25500
	1000	10000					20400					T	T					20400	25500
	1250	12500											T						25500
	1600	16000																	
OptiMat A-S2 (85 kA)	630	6300			12750	15938	20400			T	T	T	T			12750	15938	20400	25500
	800	8000				15938	20400				T	T	T				15938	20400	25500
	1000	10000					20400					T	T					20400	25500
	1250	12500											T						25500
	1600	16000																	
	2000	20000																	
OptiMat A-S4 (100 kA)	2500	25000																	
	3200	32000																	
	4000	40000																	
OptiMat A-S5 (120 kA)	5000	50000																	
	6300	63000																	
OptiMat A-S6 (120 kA)	5000	50000																	
	6300	63000																	

Series			Upstream device									
			OptiMat A-S4 (100 kA)			OptiMat A-S4 (100 kA)			OptiMat A-S5 (120 kA)	OptiMat A-S6 (120 kA)	OptiMat A-S5 (120 kA)	OptiMat A-S6 (120 kA)
			Ii : OFF			Ii : ON = 15*In			Ii : OFF		Ii : ON = 15*In	
	In, A		2500	3200	4000	2500	3200	4000	5000	6300	5000	6300
		Isd, A	25000	32000	40000	25000	32000	40000	50000	63000	50000	63000
OptiMat A-S1 (50 kA)	630	6300	T	T	T	31875	40800	51000	T	T	63750	80325
	800	8000	T	T	T	31875	40800	51000	T	T	63750	80325
	1000	10000	T	T	T	31875	40800	51000	T	T	63750	80325
	1250	12500	T	T	T	31875	40800	51000	T	T	63750	80325
	1600	16000	T	T	T	31875	40800	51000	T	T	63750	80325
OptiMat A-S2 (65 kA)	630	6300	T	T	T	31875	40800	51000	T	T	63750	80325
	800	8000	T	T	T	31875	40800	51000	T	T	63750	80325
	1000	10000	T	T	T	31875	40800	51000	T	T	63750	80325
	1250	12500	T	T	T	31875	40800	51000	T	T	63750	80325
	1600	16000	T	T	T	31875	40800	51000	T	T	63750	80325
OptiMat A-S2 (85 kA)	630	6300	T	T	T	31875	40800	51000	T	T	63750	80325
	800	8000	T	T	T	31875	40800	51000	T	T	63750	80325
	1000	10000	T	T	T	31875	40800	51000	T	T	63750	80325
	1250	12500	T	T	T	31875	40800	51000	T	T	63750	80325
	1600	16000	T	T	T	31875	40800	51000	T	T	63750	80325
	2000	20000		T	T		40800	51000	T	T	63750	80325
OptiMat A-S4 (100 kA)	2500	25000			T			51000	T	T	63750	80325
	3200	32000							T	T	63750	80325
	4000	40000								T		80325
OptiMat A-S5 (120 kA)	5000	50000										
	6300	63000										
OptiMat A-S6 (120 kA)	5000	50000										
	6300	63000										

Примечание:

10200	Selectivity current limit Is = 10200 A
T	Selectivity Complete
	Selectivity not ensured

OptiMat A - OptiMat D-MR

Series			Upstream device														
			OptiMat A-S1 (50 kA)					OptiMat A-S1 (50 kA)					OptiMat A-S2 (65 kA)				
			Ii : OFF					Ii : ON = 15*In					Ii : OFF				
OptiMat D100 N/H (40/65 kA at Ue = 400 V)	In, A		630	800	1000	1250	1600	630	800	1000	1250	1600	630	800	1000	1250	1600
		Isd, A	6300	8000	10000	12500	16000	6300	8000	10000	12500	16000	6300	8000	10000	12500	16000
	40	400	T/50	T/50	T/50	T/50	T/50	8033	10200	12750	15938	20400	T	T	T	T	T
	45	450	T/50	T/50	T/50	T/50	T/50	8033	10200	12750	15938	20400	T	T	T	T	T
	50	500	T/50	T/50	T/50	T/50	T/50	8033	10200	12750	15938	20400	T	T	T	T	T
	56	560	T/50	T/50	T/50	T/50	T/50	8033	10200	12750	15938	20400	T	T	T	T	T
	63	630	T/50	T/50	T/50	T/50	T/50	8033	10200	12750	15938	20400	T	T	T	T	T
	70	700	T/50	T/50	T/50	T/50	T/50	8033	10200	12750	15938	20400	T	T	T	T	T
	80	800	T/50	T/50	T/50	T/50	T/50	8033	10200	12750	15938	20400	T	T	T	T	T
	90	900	T/50	T/50	T/50	T/50	T/50	8033	10200	12750	15938	20400	T	T	T	T	T
	95	950	T/50	T/50	T/50	T/50	T/50	8033	10200	12750	15938	20400	T	T	T	T	T
	100	1000	T/50	T/50	T/50	T/50	T/50	8033	10200	12750	15938	20400	T	T	T	T	T

Series			Upstream device															
			OptiMat A-S2 (65 kA)					OptiMat A-S2 (85 kA)						OptiMat A-S2 (85 kA)					
			Ii : ON = 15*In					Ii : OFF						Ii : ON = 15*In					
OptiMat D100 N/H (40/65 kA at Ue = 400 V)	In, A		630	800	1000	1250	1600	630	800	1000	1250	1600	2000	630	800	1000	1250	1600	2000
		Isd, A	6300	8000	10000	12500	16000	6300	8000	10000	12500	16000	20000	6300	8000	10000	12500	16000	20000
	40	400	8033	10200	12750	15938	20400	T	T	T	T	T	T	8033	10200	12750	15938	20400	25500
	45	450	8033	10200	12750	15938	20400	T	T	T	T	T	T	8033	10200	12750	15938	20400	25500
	50	500	8033	10200	12750	15938	20400	T	T	T	T	T	T	8033	10200	12750	15938	20400	25500
	56	560	8033	10200	12750	15938	20400	T	T	T	T	T	T	8033	10200	12750	15938	20400	25500
	63	630	8033	10200	12750	15938	20400	T	T	T	T	T	T	8033	10200	12750	15938	20400	25500
	70	700	8033	10200	12750	15938	20400	T	T	T	T	T	T	8033	10200	12750	15938	20400	25500
	80	800	8033	10200	12750	15938	20400	T	T	T	T	T	T	8033	10200	12750	15938	20400	25500
	90	900	8033	10200	12750	15938	20400	T	T	T	T	T	T	8033	10200	12750	15938	20400	25500
	95	950	8033	10200	12750	15938	20400	T	T	T	T	T	T	8033	10200	12750	15938	20400	25500
	100	1000	8033	10200	12750	15938	20400	T	T	T	T	T	T	8033	10200	12750	15938	20400	25500

Series			Upstream device								
			OptiMat A-S4 (100 kA)			OptiMat A-S4 (100 kA)			OptiMat A-S5 (120 kA)	OptiMat A-S6 (120 kA)	OptiMat A-S5 (120 kA)	OptiMat A-S6 (120 kA)
			Ii : OFF			Ii : ON = 15*In			Ii : OFF		Ii : ON = 15*In	
OptiMat D100 N/H (40/65 kA at Ue = 400 V)	In, A		2500	3200	4000	2500	3200	4000	5000	6300	5000	6300
		Isd, A	25000	32000	40000	25000	32000	40000	50000	63000	50000	63000
	40	400	T	T	T	31875	40800	51000	T	T	63750	80325
	45	450	T	T	T	31875	40800	51000	T	T	63750	80325
	50	500	T	T	T	31875	40800	51000	T	T	63750	80325
	56	560	T	T	T	31875	40800	51000	T	T	63750	80325
	63	630	T	T	T	31875	40800	51000	T	T	63750	80325
	70	700	T	T	T	31875	40800	51000	T	T	63750	80325
	80	800	T	T	T	31875	40800	51000	T	T	63750	80325
	90	900	T	T	T	31875	40800	51000	T	T	63750	80325
	95	950	T	T	T	31875	40800	51000	T	T	63750	80325
	100	1000	T	T	T	31875	40800	51000	T	T	63750	80325

Series			Upstream device														
			OptiMat A-S1 (50 kA)					OptiMat A-S1 (50 kA)					OptiMat A-S2 (65 kA)				
			Ii : OFF					Ii : ON = 15*In					Ii : OFF				
OptiMat D160 N/H (40/65 kA at Ue = 400 V)	In, A		630	800	1000	1250	1600	630	800	1000	1250	1600	630	800	1000	1250	1600
		Isd, A	6300	8000	10000	12500	16000	6300	8000	10000	12500	16000	6300	8000	10000	12500	16000
	64	640	T/50	T/50	T/50	T/50	T/50	8033	10200	12750	15938	20400	T	T	T	T	T
	72	720	T/50	T/50	T/50	T/50	T/50	8033	10200	12750	15938	20400	T	T	T	T	T
	80	800	T/50	T/50	T/50	T/50	T/50	8033	10200	12750	15938	20400	T	T	T	T	T
	89,6	896	T/50	T/50	T/50	T/50	T/50	8033	10200	12750	15938	20400	T	T	T	T	T
	100,8	1008	T/50	T/50	T/50	T/50	T/50	8033	10200	12750	15938	20400	T	T	T	T	T
	112	1120	T/50	T/50	T/50	T/50	T/50	8033	10200	12750	15938	20400	T	T	T	T	T
	128	1280	T/50	T/50	T/50	T/50	T/50	8033	10200	12750	15938	20400	T	T	T	T	T
	144	1440	T/50	T/50	T/50	T/50	T/50	8033	10200	12750	15938	20400	T	T	T	T	T
	152	1520	T/50	T/50	T/50	T/50	T/50	8033	10200	12750	15938	20400	T	T	T	T	T
	160	1600	T/50	T/50	T/50	T/50	T/50	8033	10200	12750	15938	20400	T	T	T	T	T

Series			Upstream device															
			OptiMat A-S2 (65 kA)					OptiMat A-S2 (85 kA)						OptiMat A-S2 (85 kA)					
			Ii : ON = 15*In					Ii : OFF						Ii : ON = 15*In					
OptiMat D160 N/H (40/65 kA at Ue = 400 V)	In, A		630	800	1000	1250	1600	630	800	1000	1250	1600	2000	630	800	1000	1250	1600	2000
		Isd, A	6300	8000	10000	12500	16000	6300	8000	10000	12500	16000	20000	6300	8000	10000	12500	16000	20000
	64	640	8033	10200	12750	15938	20400	T	T	T	T	T	T	8033	10200	12750	15938	20400	25500
	72	720	8033	10200	12750	15938	20400	T	T	T	T	T	T	8033	10200	12750	15938	20400	25500
	80	800	8033	10200	12750	15938	20400	T	T	T	T	T	T	8033	10200	12750	15938	20400	25500
	89,6	896	8033	10200	12750	15938	20400	T	T	T	T	T	T	8033	10200	12750	15938	20400	25500
	100,8	1008	8033	10200	12750	15938	20400	T	T	T	T	T	T	8033	10200	12750	15938	20400	25500
	112	1120	8033	10200	12750	15938	20400	T	T	T	T	T	T	8033	10200	12750	15938	20400	25500
	128	1280	8033	10200	12750	15938	20400	T	T	T	T	T	T	8033	10200	12750	15938	20400	25500
	144	1440	8033	10200	12750	15938	20400	T	T	T	T	T	T	8033	10200	12750	15938	20400	25500
	152	1520	8033	10200	12750	15938	20400	T	T	T	T	T	T	8033	10200	12750	15938	20400	25500
	160	1600	8033	10200	12750	15938	20400	T	T	T	T	T	T	8033	10200	12750	15938	20400	25500

Series			Upstream device									
			OptiMat A-S4 (100 kA)			OptiMat A-S4 (100 kA)			OptiMat A-S5 (120 kA)	OptiMat A-S6 (120 kA)	OptiMat A-S5 (120 kA)	OptiMat A-S6 (120 kA)
			Ii : OFF			Ii : ON = 15*In			Ii : OFF		Ii : ON = 15*In	
OptiMat D160 N/H (40/65 kA at Ue = 400 V)	In, A		2500	3200	4000	2500	3200	4000	5000	6300	5000	6300
		Isd, A	25000	32000	40000	25000	32000	40000	50000	63000	50000	63000
	64	640	T	T	T	31875	40800	51000	T	T	63750	80325
	72	720	T	T	T	31875	40800	51000	T	T	63750	80325
	80	800	T	T	T	31875	40800	51000	T	T	63750	80325
	89,6	896	T	T	T	31875	40800	51000	T	T	63750	80325
	100,8	1008	T	T	T	31875	40800	51000	T	T	63750	80325
	112	1120	T	T	T	31875	40800	51000	T	T	63750	80325
	128	1280	T	T	T	31875	40800	51000	T	T	63750	80325
	144	1440	T	T	T	31875	40800	51000	T	T	63750	80325
	152	1520	T	T	T	31875	40800	51000	T	T	63750	80325
	160	1600	T	T	T	31875	40800	51000	T	T	63750	80325

Series			Upstream device														
			OptiMat A-S1 (50 kA)					OptiMat A-S1 (50 kA)					OptiMat A-S2 (65 kA)				
			Ii : OFF					Ii : ON = 15*In					Ii : OFF				
OptiMat D250 N/H (40/65 kA at Ue = 400 V)	In, A		630	800	1000	1250	1600	630	800	1000	1250	1600	630	800	1000	1250	1600
		Isd, A	6300	8000	10000	12500	16000	6300	8000	10000	12500	16000	6300	8000	10000	12500	16000
	100	1000	T/50	T/50	T/50	T/50	T/50	8033	10200	12750	15938	20400	T	T	T	T	T
	113	1130	T/50	T/50	T/50	T/50	T/50	8033	10200	12750	15938	20400	T	T	T	T	T
	125	1250	T/50	T/50	T/50	T/50	T/50	8033	10200	12750	15938	20400	T	T	T	T	T
	140	1400	T/50	T/50	T/50	T/50	T/50	8033	10200	12750	15938	20400	T	T	T	T	T
	158	1580	T/50	T/50	T/50	T/50	T/50	8033	10200	12750	15938	20400	T	T	T	T	T
	175	1750	T/50	T/50	T/50	T/50	T/50	8033	10200	12750	15938	20400	T	T	T	T	T
	200	2000	T/50	T/50	T/50	T/50	T/50	8033	10200	12750	15938	20400	T	T	T	T	T
	225	2250	T/50	T/50	T/50	T/50	T/50	8033	10200	12750	15938	20400	T	T	T	T	T
	238	2380	T/50	T/50	T/50	T/50	T/50	8033	10200	12750	15938	20400	T	T	T	T	T
	250	2500	T/50	T/50	T/50	T/50	T/50	8033	10200	12750	15938	20400	T	T	T	T	T

Series			Upstream device															
			OptiMat A-S2 (65 kA)					OptiMat A-S2 (85 kA)						OptiMat A-S2 (85 kA)					
			Ii : ON = 15*In					Ii : OFF						Ii : ON = 15*In					
OptiMat D250 N/H (40/65 kA at Ue = 400 V)	In, A		630	800	1000	1250	1600	630	800	1000	1250	1600	2000	630	800	1000	1250	1600	2000
		Isd, A	6300	8000	10000	12500	16000	6300	8000	10000	12500	16000	20000	6300	8000	10000	12500	16000	20000
	100	1000	8033	10200	12750	15938	20400	T	T	T	T	T	T	8033	10200	12750	15938	20400	25500
	113	1130	8033	10200	12750	15938	20400	T	T	T	T	T	T	8033	10200	12750	15938	20400	25500
	125	1250	8033	10200	12750	15938	20400	T	T	T	T	T	T	8033	10200	12750	15938	20400	25500
	140	1400	8033	10200	12750	15938	20400	T	T	T	T	T	T	8033	10200	12750	15938	20400	25500
	158	1580	8033	10200	12750	15938	20400	T	T	T	T	T	T	8033	10200	12750	15938	20400	25500
	175	1750	8033	10200	12750	15938	20400	T	T	T	T	T	T	8033	10200	12750	15938	20400	25500
	200	2000	8033	10200	12750	15938	20400	T	T	T	T	T	T	8033	10200	12750	15938	20400	25500
	225	2250	8033	10200	12750	15938	20400	T	T	T	T	T	T	8033	10200	12750	15938	20400	25500
	238	2380	8033	10200	12750	15938	20400	T	T	T	T	T	T	8033	10200	12750	15938	20400	25500
	250	2500	8033	10200	12750	15938	20400	T	T	T	T	T	T	8033	10200	12750	15938	20400	25500

Series			Upstream device									
			OptiMat A-S4 (100 kA)			OptiMat A-S4 (100 kA)			OptiMat A-S5 (120 kA)	OptiMat A-S6 (120 kA)	OptiMat A-S5 (120 kA)	OptiMat A-S6 (120 kA)
			Ii : OFF			Ii : ON = 15*In			Ii : OFF		Ii : ON = 15*In	
OptiMat D250 N/H (40/65 kA at Ue = 400 V)	In, A		2500	3200	4000	2500	3200	4000	5000	6300	5000	6300
		Isd, A	25000	32000	40000	25000	32000	40000	50000	63000	50000	63000
	100	1000	T	T	T	31875	40800	51000	T	T	63750	80325
	113	1130	T	T	T	31875	40800	51000	T	T	63750	80325
	125	1250	T	T	T	31875	40800	51000	T	T	63750	80325
	140	1400	T	T	T	31875	40800	51000	T	T	63750	80325
	158	1580	T	T	T	31875	40800	51000	T	T	63750	80325
	175	1750	T	T	T	31875	40800	51000	T	T	63750	80325
	200	2000	T	T	T	31875	40800	51000	T	T	63750	80325
	225	2250	T	T	T	31875	40800	51000	T	T	63750	80325
	238	2380	T	T	T	31875	40800	51000	T	T	63750	80325
	250	2500	T	T	T	31875	40800	51000	T	T	63750	80325

Series			Upstream device														
			OptiMat A-S1 (50 kA)					OptiMat A-S1 (50 kA)					OptiMat A-S2 (65 kA)				
			Ii : OFF					Ii : ON = 15*In					Ii : OFF				
OptiMat D400 N/H (40/65 kA at Ue = 400 V)	In, A		630	800	1000	1250	1600	630	800	1000	1250	1600	630	800	1000	1250	1600
		Isd, A	6300	8000	10000	12500	16000	6300	8000	10000	12500	16000	6300	8000	10000	12500	16000
	160	1600	T/50	T/50	T/50	T/50	T/50	8033	10200	12750	15938	20400	T	T	T	T	T
	180	1800	T/50	T/50	T/50	T/50	T/50	8033	10200	12750	15938	20400	T	T	T	T	T
	200	2000	T/50	T/50	T/50	T/50	T/50	8033	10200	12750	15938	20400	T	T	T	T	T
	220	2200	T/50	T/50	T/50	T/50	T/50	8033	10200	12750	15938	20400	T	T	T	T	T
	240	2400	T/50	T/50	T/50	T/50	T/50	8033	10200	12750	15938	20400	T	T	T	T	T
	260	2600	T/50	T/50	T/50	T/50	T/50	8033	10200	12750	15938	20400	T	T	T	T	T
	280	2800	T/50	T/50	T/50	T/50	T/50	8033	10200	12750	15938	20400	T	T	T	T	T
	300	3000	T/50	T/50	T/50	T/50	T/50	8033	10200	12750	15938	20400	T	T	T	T	T
	320	3200	T/50	T/50	T/50	T/50	T/50	8033	10200	12750	15938	20400	T	T	T	T	T
	340	3400	T/50	T/50	T/50	T/50	T/50	8033	10200	12750	15938	20400	T	T	T	T	T
	360	3600	T/50	T/50	T/50	T/50	T/50	8033	10200	12750	15938	20400	T	T	T	T	T
	380	3800	T/50	T/50	T/50	T/50	T/50	8033	10200	12750	15938	20400	T	T	T	T	T
	400	4000	T/50	T/50	T/50	T/50	T/50	8033	10200	12750	15938	20400	T	T	T	T	T

Series			Upstream device																
			OptiMat A-S2 (65 kA)					OptiMat A-S2 (85 kA)						OptiMat A-S2 (85 kA)					
			Ii : ON = 15*In					Ii : OFF						Ii : ON = 15*In					
OptiMat D400 N/H (40/65 kA at Ue = 400 V)	In, A		630	800	1000	1250	1600	630	800	1000	1250	1600	2000	630	800	1000	1250	1600	2000
		Isd, A	6300	8000	10000	12500	16000	6300	8000	10000	12500	16000	20000	6300	8000	10000	12500	16000	20000
	160	1600	8033	10200	12750	15938	20400	T	T	T	T	T	T	8033	10200	12750	15938	20400	25500
	180	1800	8033	10200	12750	15938	20400	T	T	T	T	T	T	8033	10200	12750	15938	20400	25500
	200	2000	8033	10200	12750	15938	20400	T	T	T	T	T	T	8033	10200	12750	15938	20400	25500
	220	2200	8033	10200	12750	15938	20400	T	T	T	T	T	T	8033	10200	12750	15938	20400	25500
	240	2400	8033	10200	12750	15938	20400	T	T	T	T	T	T	8033	10200	12750	15938	20400	25500
	260	2600	8033	10200	12750	15938	20400	T	T	T	T	T	T	8033	10200	12750	15938	20400	25500
	280	2800	8033	10200	12750	15938	20400	T	T	T	T	T	T	8033	10200	12750	15938	20400	25500
	300	3000	8033	10200	12750	15938	20400	T	T	T	T	T	T	8033	10200	12750	15938	20400	25500
	320	3200	8033	10200	12750	15938	20400	T	T	T	T	T	T	8033	10200	12750	15938	20400	25500
	340	3400	8033	10200	12750	15938	20400	T	T	T	T	T	T	8033	10200	12750	15938	20400	25500
	360	3600	8033	10200	12750	15938	20400	T	T	T	T	T	T	8033	10200	12750	15938	20400	25500
	380	3800	8033	10200	12750	15938	20400	T	T	T	T	T	T	8033	10200	12750	15938	20400	25500
	400	4000	8033	10200	12750	15938	20400	T	T	T	T	T	T	8033	10200	12750	15938	20400	25500

Series			Upstream device									
			OptiMat A-S4 (100 kA)			OptiMat A-S4 (100 kA)			OptiMat A-S5 (120 kA)	OptiMat A-S6 (120 kA)	OptiMat A-S5 (120 kA)	OptiMat A-S6 (120 kA)
			Ii : OFF			Ii : ON = 15*In			Ii : OFF		Ii : ON = 15*In	
OptiMat D400 N/H (40/65 kA at Ue = 400 V)	In, A		2500	3200	4000	2500	3200	4000	5000	6300	5000	6300
		Isd, A	25000	32000	40000	25000	32000	40000	50000	63000	50000	63000
	160	1600	T	T	T	31875	40800	51000	T	T	63750	80325
	180	1800	T	T	T	31875	40800	51000	T	T	63750	80325
	200	2000	T	T	T	31875	40800	51000	T	T	63750	80325
	220	2200	T	T	T	31875	40800	51000	T	T	63750	80325
	240	2400	T	T	T	31875	40800	51000	T	T	63750	80325
	260	2600	T	T	T	31875	40800	51000	T	T	63750	80325
	280	2800	T	T	T	31875	40800	51000	T	T	63750	80325
	300	3000	T	T	T	31875	40800	51000	T	T	63750	80325
	320	3200	T	T	T	31875	40800	51000	T	T	63750	80325
	340	3400	T	T	T	31875	40800	51000	T	T	63750	80325
	360	3600	T	T	T	31875	40800	51000	T	T	63750	80325
	380	3800	T	T	T	31875	40800	51000	T	T	63750	80325
	400	4000	T	T	T	31875	40800	51000	T	T	63750	80325

Series			Upstream device														
			OptiMat A-S1 (50 kA)					OptiMat A-S1 (50 kA)					OptiMat A-S2 (65 kA)				
			Ii : OFF					Ii : ON = 15*In					Ii : OFF				
OptiMat D630 N/H (40/65 kA at Ue = 400 V)	In, A		630	800	1000	1250	1600	630	800	1000	1250	1600	630	800	1000	1250	1600
		Isd, A	6300	8000	10000	12500	16000	6300	8000	10000	12500	16000	6300	8000	10000	12500	16000
	250	2500	T/50	T/50	T/50	T/50	T/50	8033	10200	12750	15938	20400	T	T	T	T	T
	270	2700	T/50	T/50	T/50	T/50	T/50	8033	10200	12750	15938	20400	T	T	T	T	T
	290	2900	T/50	T/50	T/50	T/50	T/50	8033	10200	12750	15938	20400	T	T	T	T	T
	310	3100	T/50	T/50	T/50	T/50	T/50	8033	10200	12750	15938	20400	T	T	T	T	T
	330	3300	T/50	T/50	T/50	T/50	T/50	8033	10200	12750	15938	20400	T	T	T	T	T
	350	3500	T/50	T/50	T/50	T/50	T/50	8033	10200	12750	15938	20400	T	T	T	T	T
	370	3700	T/50	T/50	T/50	T/50	T/50	8033	10200	12750	15938	20400	T	T	T	T	T
	390	3900	T/50	T/50	T/50	T/50	T/50	8033	10200	12750	15938	20400	T	T	T	T	T
	410	4100	T/50	T/50	T/50	T/50	T/50	8033	10200	12750	15938	20400	T	T	T	T	T
	430	4300		T/50	T/50	T/50	T/50		10200	12750	15938	20400		T	T	T	T
	450	4500		T/50	T/50	T/50	T/50		10200	12750	15938	20400		T	T	T	T
	470	4700		T/50	T/50	T/50	T/50		10200	12750	15938	20400		T	T	T	T
	490	4900		T/50	T/50	T/50	T/50		10200	12750	15938	20400		T	T	T	T
	510	5100		T/50	T/50	T/50	T/50		10200	12750	15938	20400		T	T	T	T
	530	5300		T/50	T/50	T/50	T/50		10200	12750	15938	20400		T	T	T	T
	550	5500			T/50	T/50	T/50			12750	15938	20400			T	T	T
	570	5700			T/50	T/50	T/50			12750	15938	20400			T	T	T
	590	5900			T/50	T/50	T/50			12750	15938	20400			T	T	T
	610	6100			T/50	T/50	T/50			12750	15938	20400			T	T	T
	630	6300			T/50	T/50	T/50			12750	15938	20400			T	T	T

Series			Upstream device																
			OptiMat A-S2 (65 kA)					OptiMat A-S2 (85 kA)						OptiMat A-S2 (85 kA)					
			Ii : ON = 15*In					Ii : OFF						Ii : ON = 15*In					
OptiMat D630 N/H (40/65 kA at Ue = 400 V)	In, A		630	800	1000	1250	1600	630	800	1000	1250	1600	2000	630	800	1000	1250	1600	2000
		Isd, A	6300	8000	10000	12500	16000	6300	8000	10000	12500	16000	20000	6300	8000	10000	12500	16000	20000
	250	2500	8033	10200	12750	15938	20400	T	T	T	T	T	T	8033	10200	12750	15938	20400	25500
	270	2700	8033	10200	12750	15938	20400	T	T	T	T	T	T	8033	10200	12750	15938	20400	25500
	290	2900	8033	10200	12750	15938	20400	T	T	T	T	T	T	8033	10200	12750	15938	20400	25500
	310	3100	8033	10200	12750	15938	20400	T	T	T	T	T	T	8033	10200	12750	15938	20400	25500
	330	3300	8033	10200	12750	15938	20400	T	T	T	T	T	T	8033	10200	12750	15938	20400	25500
	350	3500	8033	10200	12750	15938	20400	T	T	T	T	T	T	8033	10200	12750	15938	20400	25500
	370	3700	8033	10200	12750	15938	20400	T	T	T	T	T	T	8033	10200	12750	15938	20400	25500
	390	3900	8033	10200	12750	15938	20400	T	T	T	T	T	T	8033	10200	12750	15938	20400	25500
	410	4100	8033	10200	12750	15938	20400	T	T	T	T	T	T	8033	10200	12750	15938	20400	25500
	430	4300		10200	12750	15938	20400		T	T	T	T	T		10200	12750	15938	20400	25500
	450	4500		10200	12750	15938	20400		T	T	T	T	T		10200	12750	15938	20400	25500
	470	4700		10200	12750	15938	20400		T	T	T	T	T		10200	12750	15938	20400	25500
	490	4900		10200	12750	15938	20400		T	T	T	T	T		10200	12750	15938	20400	25500
	510	5100		10200	12750	15938	20400		T	T	T	T	T		10200	12750	15938	20400	25500
	530	5300		10200	12750	15938	20400		T	T	T	T	T		10200	12750	15938	20400	25500
	550	5500			12750	15938	20400			T	T	T	T			12750	15938	20400	25500
	570	5700			12750	15938	20400			T	T	T	T			12750	15938	20400	25500
	590	5900			12750	15938	20400			T	T	T	T			12750	15938	20400	25500
	610	6100			12750	15938	20400			T	T	T	T			12750	15938	20400	25500
	630	6300			12750	15938	20400			T	T	T	T			12750	15938	20400	25500

Series			Upstream device									
			OptiMat A-S4 (100 kA)			OptiMat A-S4 (100 kA)			OptiMat A-S5 (120 kA)	OptiMat A-S6 (120 kA)	OptiMat A-S5 (120 kA)	OptiMat A-S6 (120 kA)
			Ii : OFF			Ii : ON = 15*In			Ii : OFF		Ii : ON = 15*In	
OptiMat D630 N/H (40/65 kA at Ue = 400 V)	In, A		2500	3200	4000	2500	3200	4000	5000	6300	5000	6300
		Isd, A	25000	32000	40000	25000	32000	40000	50000	63000	50000	63000
	250	2500	T	T	T	31875	40800	51000	T	T	63750	80325
	270	2700	T	T	T	31875	40800	51000	T	T	63750	80325
	290	2900	T	T	T	31875	40800	51000	T	T	63750	80325
	310	3100	T	T	T	31875	40800	51000	T	T	63750	80325
	330	3300	T	T	T	31875	40800	51000	T	T	63750	80325
	350	3500	T	T	T	31875	40800	51000	T	T	63750	80325
	370	3700	T	T	T	31875	40800	51000	T	T	63750	80325
	390	3900	T	T	T	31875	40800	51000	T	T	63750	80325
	410	4100	T	T	T	31875	40800	51000	T	T	63750	80325
	430	4300	T	T	T	31875	40800	51000	T	T	63750	80325
	450	4500	T	T	T	31875	40800	51000	T	T	63750	80325
	470	4700	T	T	T	31875	40800	51000	T	T	63750	80325
	490	4900	T	T	T	31875	40800	51000	T	T	63750	80325
	510	5100	T	T	T	31875	40800	51000	T	T	63750	80325
	530	5300	T	T	T	31875	40800	51000	T	T	63750	80325
	550	5500	T	T	T	31875	40800	51000	T	T	63750	80325
	570	5700	T	T	T	31875	40800	51000	T	T	63750	80325
	590	5900	T	T	T	31875	40800	51000	T	T	63750	80325
	610	6100	T	T	T	31875	40800	51000	T	T	63750	80325
	630	6300	T	T	T	31875	40800	51000	T	T	63750	80325

Series			Upstream device														
			OptiMat A-S1 (50 kA)					OptiMat A-S1 (50 kA)					OptiMat A-S2 (65 kA)				
			Ii : OFF					Ii : ON = 15*In					Ii : OFF				
OptiMat D800 N/H (50/85 kA at Ue = 400 V)	In, A		630	800	1000	1250	1600	630	800	1000	1250	1600	630	800	1000	1250	1600
		Isd, A	6300	8000	10000	12500	16000	6300	8000	10000	12500	16000	6300	8000	10000	12500	16000
	320	3200	T/50	T/50	T/50	T/50	T/50	8033	10200	12750	15938	20400	T/65	T/65	T/65	T/65	T/65
	360	3600	T/50	T/50	T/50	T/50	T/50	8033	10200	12750	15938	20400	T/65	T/65	T/65	T/65	T/65
	400	4000	T/50	T/50	T/50	T/50	T/50	8033	10200	12750	15938	20400	T/65	T/65	T/65	T/65	T/65
	440	4400		T/50	T/50	T/50	T/50		10200	12750	15938	20400		T/65	T/65	T/65	T/65
	480	4800		T/50	T/50	T/50	T/50		10200	12750	15938	20400		T/65	T/65	T/65	T/65
	520	5200		T/50	T/50	T/50	T/50		10200	12750	15938	20400		T/65	T/65	T/65	T/65
	560	5600			T/50	T/50	T/50			12750	15938	20400			T/65	T/65	T/65
	600	6000			T/50	T/50	T/50			12750	15938	20400			T/65	T/65	T/65
	640	6400			T/50	T/50	T/50			12750	15938	20400			T/65	T/65	T/65
	680	6800				T/50	T/50				15938	20400				T/65	T/65
	720	7200				T/50	T/50				15938	20400				T/65	T/65
	760	7600				T/50	T/50				15938	20400				T/65	T/65
	800	8000				T/50	T/50				15938	20400				T/65	T/65

Series			Upstream device															
			OptiMat A-S2 (65 kA)					OptiMat A-S2 (85 kA)						OptiMat A-S2 (85 kA)				
			Ii : ON = 15*In					Ii : OFF						Ii : ON = 15*In				
OptiMat D800 N/H (50/85 kA at Ue = 400 V)	In, A		630	800	1000	1250	1600	630	800	1000	1250	1600	2000	630	800	1000	1250	1600	2000
		Isd, A	6300	8000	10000	12500	16000	6300	8000	10000	12500	16000	20000	6300	8000	10000	12500	16000	20000
	320	3200	8033	10200	12750	15938	20400	T	T	T	T	T	T	8033	10200	12750	15938	20400	25500
	360	3600	8033	10200	12750	15938	20400	T	T	T	T	T	T	8033	10200	12750	15938	20400	25500
	400	4000	8033	10200	12750	15938	20400	T	T	T	T	T	T	8033	10200	12750	15938	20400	25500
	440	4400		10200	12750	15938	20400		T	T	T	T	T		10200	12750	15938	20400	25500
	480	4800		10200	12750	15938	20400		T	T	T	T	T		10200	12750	15938	20400	25500
	520	5200		10200	12750	15938	20400		T	T	T	T	T		10200	12750	15938	20400	25500
	560	5600			12750	15938	20400			T	T	T	T			12750	15938	20400	25500
	600	6000			12750	15938	20400			T	T	T	T			12750	15938	20400	25500
	640	6400			12750	15938	20400			T	T	T	T			12750	15938	20400	25500
	680	6800				15938	20400				T	T	T				15938	20400	25500
	720	7200				15938	20400				T	T	T				15938	20400	25500
	760	7600				15938	20400				T	T	T				15938	20400	25500
	800	8000				15938	20400				T	T	T				15938	20400	25500

Series			Upstream device									
			OptiMat A-S4 (100 kA)			OptiMat A-S4 (100 kA)			OptiMat A-S5 (120 kA)	OptiMat A-S6 (120 kA)	OptiMat A-S5 (120 kA)	OptiMat A-S6 (120 kA)
			Ii : OFF			Ii : ON = 15*In			Ii : OFF		Ii : ON = 15*In	
OptiMat D800 N/H (50/85 kA at Ue = 400 V)	In, A		2500	3200	4000	2500	3200	4000	5000	6300	5000	6300
		Isd, A	25000	32000	40000	25000	32000	40000	50000	63000	50000	63000
	320	3200	T	T	T	31875	40800	51000	T	T	63750	80325
	360	3600	T	T	T	31875	40800	51000	T	T	63750	80325
	400	4000	T	T	T	31875	40800	51000	T	T	63750	80325
	440	4400	T	T	T	31875	40800	51000	T	T	63750	80325
	480	4800	T	T	T	31875	40800	51000	T	T	63750	80325
	520	5200	T	T	T	31875	40800	51000	T	T	63750	80325
	560	5600	T	T	T	31875	40800	51000	T	T	63750	80325
	600	6000	T	T	T	31875	40800	51000	T	T	63750	80325
	640	6400	T	T	T	31875	40800	51000	T	T	63750	80325
	680	6800	T	T	T	31875	40800	51000	T	T	63750	80325
	720	7200	T	T	T	31875	40800	51000	T	T	63750	80325
	760	7600	T	T	T	31875	40800	51000	T	T	63750	80325
	800	8000	T	T	T	31875	40800	51000	T	T	63750	80325

Series			Upstream device														
			OptiMat A-S1 (50 kA)					OptiMat A-S1 (50 kA)					OptiMat A-S2 (65 kA)				
			Ii : OFF					Ii : ON = 15*In					Ii : OFF				
OptiMat D1000 N/H (50/85 kA at Ue = 400 V)	In, A		630	800	1000	1250	1600	630	800	1000	1250	1600	630	800	1000	1250	1600
		Isd, A	6300	8000	10000	12500	16000	6300	8000	10000	12500	16000	6300	8000	10000	12500	16000
	400	4000	T/50	T/50	T/50	T/50	T/50	8033	10200	12750	15938	20400	T/65	T/65	T/65	T/65	T/65
	450	4500		T/50	T/50	T/50	T/50		10200	12750	15938	20400		T/65	T/65	T/65	T/65
	500	5000		T/50	T/50	T/50	T/50		10200	12750	15938	20400		T/65	T/65	T/65	T/65
	550	5500			T/50	T/50	T/50			12750	15938	20400			T/65	T/65	T/65
	600	6000			T/50	T/50	T/50			12750	15938	20400			T/65	T/65	T/65
	650	6500			T/50	T/50	T/50			12750	15938	20400			T/65	T/65	T/65
	700	7000				T/50	T/50				15938	20400				T/65	T/65
	750	7500				T/50	T/50				15938	20400				T/65	T/65
	800	8000				T/50	T/50				15938	20400				T/65	T/65
	850	8500					T/50					20400					T/65
	900	9000					T/50					20400					T/65
	950	9500					T/50					20400					T/65
	1000	10000					T/50					20400					T/65

Series			Upstream device															
			OptiMat A-S2 (65 kA)					OptiMat A-S2 (85 kA)						OptiMat A-S2 (85 kA)				
			Ii : ON = 15*In					Ii : OFF						Ii : ON = 15*In				
OptiMat D1000 N/H (50/85 kA at Ue = 400 V)	In, A		630	800	1000	1250	1600	630	800	1000	1250	1600	2000	630	800	1000	1250	1600	2000
		Isd, A	6300	8000	10000	12500	16000	6300	8000	10000	12500	16000	20000	6300	8000	10000	12500	16000	20000
	400	4000	8033	10200	12750	15938	20400	T	T	T	T	T	T	8033	10200	12750	15938	20400	25500
	450	4500		10200	12750	15938	20400		T	T	T	T	T		10200	12750	15938	20400	25500
	500	5000		10200	12750	15938	20400		T	T	T	T	T		10200	12750	15938	20400	25500
	550	5500			12750	15938	20400			T	T	T	T			12750	15938	20400	25500
	600	6000			12750	15938	20400			T	T	T	T			12750	15938	20400	25500
	650	6500			12750	15938	20400			T	T	T	T			12750	15938	20400	25500
	700	7000				15938	20400				T	T	T				15938	20400	25500
	750	7500				15938	20400				T	T	T				15938	20400	25500
	800	8000				15938	20400				T	T	T				15938	20400	25500
	850	8500					20400					T	T					20400	25500
	900	9000					20400					T	T					20400	25500
	950	9500					20400					T	T					20400	25500
	1000	10000					20400					T	T					20400	25500

Series			Upstream device									
			OptiMat A-S4 (100 kA)			OptiMat A-S4 (100 kA)			OptiMat A-S5 (120 kA)	OptiMat A-S6 (120 kA)	OptiMat A-S5 (120 kA)	OptiMat A-S6 (120 kA)
			Ii : OFF			Ii : ON = 15*In			Ii : OFF		Ii : ON = 15*In	
OptiMat D1000 N/H (50/85 kA at Ue = 400 V)	In, A		2500	3200	4000	2500	3200	4000	5000	6300	5000	6300
		Isd, A	25000	32000	40000	25000	32000	40000	50000	63000	50000	63000
	400	4000	T	T	T	31875	40800	51000	T	T	63750	80325
	450	4500	T	T	T	31875	40800	51000	T	T	63750	80325
	500	5000	T	T	T	31875	40800	51000	T	T	63750	80325
	550	5500	T	T	T	31875	40800	51000	T	T	63750	80325
	600	6000	T	T	T	31875	40800	51000	T	T	63750	80325
	650	6500	T	T	T	31875	40800	51000	T	T	63750	80325
	700	7000	T	T	T	31875	40800	51000	T	T	63750	80325
	750	7500	T	T	T	31875	40800	51000	T	T	63750	80325
	800	8000	T	T	T	31875	40800	51000	T	T	63750	80325
	850	8500	T	T	T	31875	40800	51000	T	T	63750	80325
	900	9000	T	T	T	31875	40800	51000	T	T	63750	80325
	950	9500	T	T	T	31875	40800	51000	T	T	63750	80325
	1000	10000	T	T	T	31875	40800	51000	T	T	63750	80325

Series			Upstream device														
			OptiMat A-S1 (50 kA)					OptiMat A-S1 (50 kA)					OptiMat A-S2 (65 kA)				
			Ii : OFF					Ii : ON = 15*In					Ii : OFF				
OptiMat D1250 N/H (50/85 kA at Ue = 400 V)	In, A		630	800	1000	1250	1600	630	800	1000	1250	1600	630	800	1000	1250	1600
		Isd, A	6300	8000	10000	12500	16000	6300	8000	10000	12500	16000	6300	8000	10000	12500	16000
	500	5000		T/50	T/50	T/50	T/50		10200	12750	15938	20400		T/65	T/65	T/65	T/65
	550	5500			T/50	T/50	T/50			12750	15938	20400			T/65	T/65	T/65
	600	6000			T/50	T/50	T/50			12750	15938	20400			T/65	T/65	T/65
	650	6500			T/50	T/50	T/50			12750	15938	20400			T/65	T/65	T/65
	700	7000				T/50	T/50				15938	20400				T/65	T/65
	750	7500				T/50	T/50				15938	20400				T/65	T/65
	800	8000				T/50	T/50				15938	20400				T/65	T/65
	850	8500					T/50					20400					T/65
	900	9000					T/50					20400					T/65
	950	9500					T/50					20400					T/65
	1000	10000					T/50					20400					T/65
	1050	10500					T/50					20400					T/65
	1100	11000															
	1150	11500															
	1200	12000															
	1250	12500															

Series			Upstream device															
			OptiMat A-S2 (65 kA)					OptiMat A-S2 (85 kA)						OptiMat A-S2 (85 kA)				
			Ii : ON = 15*In					Ii : OFF						Ii : ON = 15*In				
OptiMat D1250 N/H (50/85 kA at Ue = 400 V)	In, A		630	800	1000	1250	1600	630	800	1000	1250	1600	2000	630	800	1000	1250	1600	2000
		Isd, A	6300	8000	10000	12500	16000	6300	8000	10000	12500	16000	20000	6300	8000	10000	12500	16000	20000
	500	5000		10200	12750	15938	20400		T	T	T	T	T		10200	12750	15938	20400	25500
	550	5500			12750	15938	20400			T	T	T	T			12750	15938	20400	25500
	600	6000			12750	15938	20400			T	T	T	T			12750	15938	20400	25500
	650	6500			12750	15938	20400			T	T	T	T			12750	15938	20400	25500
	700	7000				15938	20400				T	T	T				15938	20400	25500
	750	7500				15938	20400				T	T	T				15938	20400	25500
	800	8000				15938	20400				T	T	T				15938	20400	25500
	850	8500					20400					T	T					20400	25500
	900	9000					20400					T	T					20400	25500
	950	9500					20400					T	T					20400	25500
	1000	10000					20400					T	T					20400	25500
	1050	10500					20400					T	T					20400	25500
	1100	11000											T						25500
	1150	11500											T						25500
	1200	12000											T						25500
	1250	12500											T						25500

Series			Upstream device									
			OptiMat A-S4 (100 kA)			OptiMat A-S4 (100 kA)			OptiMat A-S5 (120 kA)	OptiMat A-S6 (120 kA)	OptiMat A-S5 (120 kA)	OptiMat A-S6 (120 kA)
			Ii : OFF			Ii : ON = 15*In			Ii : OFF		Ii : ON = 15*In	
OptiMat D1250 N/H (50/85 kA at Ue = 400 V)	In, A		2500	3200	4000	2500	3200	4000	5000	6300	5000	6300
		Isd, A	25000	32000	40000	25000	32000	40000	50000	63000	50000	63000
	500	5000	T	T	T	31875	40800	51000	T	T	63750	80325
	550	5500	T	T	T	31875	40800	51000	T	T	63750	80325
	600	6000	T	T	T	31875	40800	51000	T	T	63750	80325
	650	6500	T	T	T	31875	40800	51000	T	T	63750	80325
	700	7000	T	T	T	31875	40800	51000	T	T	63750	80325
	750	7500	T	T	T	31875	40800	51000	T	T	63750	80325
	800	8000	T	T	T	31875	40800	51000	T	T	63750	80325
	850	8500	T	T	T	31875	40800	51000	T	T	63750	80325
	900	9000	T	T	T	31875	40800	51000	T	T	63750	80325
	950	9500	T	T	T	31875	40800	51000	T	T	63750	80325
	1000	10000	T	T	T	31875	40800	51000	T	T	63750	80325
	1050	10500	T	T	T	31875	40800	51000	T	T	63750	80325
	1100	11000	T	T	T	31875	40800	51000	T	T	63750	80325
	1150	11500	T	T	T	31875	40800	51000	T	T	63750	80325
	1200	12000	T	T	T	31875	40800	51000	T	T	63750	80325
	1250	12500	T	T	T	31875	40800	51000	T	T	63750	80325

Series			Upstream device														
			OptiMat A-S1 (50 kA)					OptiMat A-S1 (50 kA)					OptiMat A-S2 (65 kA)				
			Ii : OFF					Ii : ON = 15*In					Ii : OFF				
OptiMat D1600 N/H (50/85 kA at Ue = 400 V)	In, A		630	800	1000	1250	1600	630	800	1000	1250	1600	630	800	1000	1250	1600
		Isd, A	6300	8000	10000	12500	16000	6300	8000	10000	12500	16000	6300	8000	10000	12500	16000
	640	6400			T/50	T/50	T/50			12750	15938	20400			T/65	T/65	T/65
	700	7000				T/50	T/50				15938	20400				T/65	T/65
	760	7600				T/50	T/50				15938	20400				T/65	T/65
	820	8200				T/50	T/50				15938	20400				T/65	T/65
	880	8800					T/50					20400					T/65
	940	9400					T/50					20400					T/65
	1000	10000					T/50					20400					T/65
	1060	10600					T/50					20400					T/65
	1120	11200															
	1180	11800															
	1240	12400															
	1300	13000															
	1360	13600															
	1420	14200															
	1480	14800															
	1540	15400															
	1600	16000															

Series			Upstream device																
			OptiMat A-S2 (65 kA)					OptiMat A-S2 (85 kA)						OptiMat A-S2 (85 kA)					
			Ii : ON = 15*In					Ii : OFF						Ii : ON = 15*In					
OptiMat D1600 N/H (50/85 kA at Ue = 400 V)	In, A		630	800	1000	1250	1600	630	800	1000	1250	1600	2000	630	800	1000	1250	1600	2000
		Isd, A	6300	8000	10000	12500	16000	6300	8000	10000	12500	16000	20000	6300	8000	10000	12500	16000	20000
	640	6400			12750	15938	20400			T	T	T	T			12750	15938	20400	25500
	700	7000				15938	20400				T	T	T				15938	20400	25500
	760	7600				15938	20400				T	T	T				15938	20400	25500
	820	8200				15938	20400				T	T	T				15938	20400	25500
	880	8800					20400					T	T					20400	25500
	940	9400					20400					T	T					20400	25500
	1000	10000					20400					T	T					20400	25500
	1060	10600					20400					T	T					20400	25500
	1120	11200											T						25500
	1180	11800											T						25500
	1240	12400											T						25500
	1300	13000											T						25500
	1360	13600																	
	1420	14200																	
	1480	14800																	
	1540	15400																	
	1600	16000																	

Series			Upstream device									
			OptiMat A-S4 (100 kA)			OptiMat A-S4 (100 kA)			OptiMat A-S5 (120 kA)	OptiMat A-S6 (120 kA)	OptiMat A-S5 (120 kA)	OptiMat A-S6 (120 kA)
			Ii : OFF			Ii : ON = 15*In			Ii : OFF		Ii : ON = 15*In	
OptiMat D1600 N/H (50/85 kA at Ue = 400 V)	In, A		2500	3200	4000	2500	3200	4000	5000	6300	5000	6300
		Isd, A	25000	32000	40000	25000	32000	40000	50000	63000	50000	63000
	640	6400	T	T	T	31875	40800	51000	T	T	63750	80325
	700	7000	T	T	T	31875	40800	51000	T	T	63750	80325
	760	7600	T	T	T	31875	40800	51000	T	T	63750	80325
	820	8200	T	T	T	31875	40800	51000	T	T	63750	80325
	880	8800	T	T	T	31875	40800	51000	T	T	63750	80325
	940	9400	T	T	T	31875	40800	51000	T	T	63750	80325
	1000	10000	T	T	T	31875	40800	51000	T	T	63750	80325
	1060	10600	T	T	T	31875	40800	51000	T	T	63750	80325
	1120	11200	T	T	T	31875	40800	51000	T	T	63750	80325
	1180	11800	T	T	T	31875	40800	51000	T	T	63750	80325
	1240	12400	T	T	T	31875	40800	51000	T	T	63750	80325
	1300	13000	T	T	T	31875	40800	51000	T	T	63750	80325
	1360	13600	T	T	T	31875	40800	51000	T	T	63750	80325
	1420	14200	T	T	T	31875	40800	51000	T	T	63750	80325
	1480	14800	T	T	T	31875	40800	51000	T	T	63750	80325
	1540	15400	T	T	T	31875	40800	51000	T	T	63750	80325
	1600	16000	T	T	T	31875	40800	51000	T	T	63750	80325